CATALOGUE & TECHNICAL GUIDE 2015



HOLEMAKING

SECO

WELCOME TO SECO HOLEMAKING



Contents

	Alphanumerical index	5-7
	Guidelines	9-12
Seco Feedmax™	Range overview and technical information	14-24
	Seco Feedmax™/ Feedmax™ Universal	25-109
	Guidelines and cutting data	110-133
Crownloc®	Range overview and technical information	134-137
	Crownloc® - tools and crowns	138-145
	Guidelines and cutting data	146-157
Crownloc®Plus	Range overview and technical information	158-161
	Crownloc®Plus - tools and crowns	162-169
	Guidelines and cutting data	170-175
Perfomax®	Range overview and technical information	176-182
	Perfomax® - tools	183-208
	Insert, guidelines and cutting data	209-240
Holders for drills	Range overview	242
	Holders	243-247
Threading	Range overview	249
Thread milling	Technical information	250-259
	Threadmaster™ and Drilling Threadmaster™ Threadmilling cutters and inserts	260-269
Threadmaster™ Taps	Technical information	270-282
	Threadmaster™ Taps	283-314
Seco Reaming	Range overview	315-317
Precimaster™	Range overview and technical information	318-324
	Precimaster™- heads and shanks	325-331
	Guidelines and cutting data	332-336
Precimaster™Plus	Range overview and technical information	337-345
	Precimaster™Plus - heads and shanks	346-350
	Guidelines and cutting data	351-355
Nanofix™	Range overview and technical information	356-361
	Nanofix™- reamers and toolholders	362-371
	Guidelines and cutting data	372-375

Contents

Bifix®	Range overview and technical information	376-380
	Bifix® - heads, shanks and blades	381-387
	Guidelines, inserts and cutting data	388-396
Precifix™	Range overview and technical information	397-400
	Precifix™ - heads, shanks and blades	401-411
	Guidelines, inserts and cutting data	412-418
Xfix™	Range overview and technical information	419-424
	Xfix™ - heads and shanks	425-448
	Guidelines and cutting data	449-455
Holders for reamers	Overview	456-457
Adjustable holders	Adjustable holders	458-465
	Guidelines	466-467
Floating holder	Range overview	468
	Floating holders	469-473
Setting fixture		474-479
Boring heads	General	480-482
Rough boring heads, EPB 750	Range overview	483-486
	Heads / Holders	487-491
	Instructions / Assembly and operation	492-496
Rough boring heads, EPB 610	Range overview	497-498
	Heads / Holders	499-500
Fine boring heads, Axiabore™	Range overview	501-508
	Heads / Tools / Holders / Kits	509-528
	Instructions / Assembly and operation	529-536
Fine boring heads, radial type	Range overview	537-540
	Heads / Holders	541-546
	Instructions / Assembly and operation	547-548
Bridge bar boring heads	Range overview	549-561
	Heads / Bars / Blocks / Cartridges	562-566
	Instructions / Assembly and operation	567-572
Liteline™	Range overview	573-576
	Heads / Arbors / Intermediates / Adapters	577-586
	Instructions / Assembly and operation	587

Contents

Custom boring solutions		588
Inserts for boring	Code key / Grades / Guidelines	589-592
	Inserts / Cutting data	593-597
	Insert locking accessories and spare parts	598
Boring heads, Graflex or Seco-Capto connections	Connection locking advice and spare parts	599-604
Holemaking tolerances		605-611
Declaration of conformity		612-614
SMG	Workpiecematerials SMG*	615-627

* SMG = Seco Material Group

A
A610 499-500
A724 544
A725 . . . . . 544, 578
A726 544
A729 545
A731 562-565
A750 . . . . . 487, 489-491
A760 . . . . . 509-510, 514
A761 512
A762 513
A763 513
A765 . . . . . 513, 515
A780 . . . . . 541, 577
A782 544
A789 546
A790 543
AFG0629 520

B
BAS25 518-519
BDA16 517
BM 243-244
BMA 208
BMH 208
BSM 245-247

C
C3-390.140 429
C3-390.272 429
C3-390.369 429
C3-390.410 429
C3-390.540 429
C3-390.55 429
C3-390.58 429
C3-391.01 429
C3-391.0750 488
C3-391.0760 511
C3-391.0780 542
C4-391.02 429
C4-391.0750 488
C4-391.0780 542
C5-390.140 435
C5-390.272 435
C5-390.369 435
C5-390.410 435
C5-390.540 435
C5-390.55 435
C5-390.555 435
C5-390.558 435
C5-390.58 435
C5-391.01 435
C5-391.02 429
C5-391.0401 583
C5-391.0750 488
C5-391.0760 511
C5-391.0780 542
C6-390.140 441
C6-390.272 441
C6-390.369 441
C6-390.410 441
C6-390.540 441
C6-390.55 441
C6-390.555 441
C6-390.558 441
C6-390.58 441
C6-391.01 441
C6-391.02 . . . . . 429, 435
C6-391.0401 583
C6-391.0750 488
C6-391.0780 542
C8-390.140 447
C8-390.272 447
C8-390.369 447
C8-390.410 447
C8-390.540 447
C8-390.558 447
C8-390.58 447
C8-391.01 447
C8-391.02 . . . . . 429, 435
C8-391.0401 583
C8-391.0750 488
C8-391.0780 542

D
DTM 264

E
E0050731200 562
E3416731200 562
E3471731200 562
E9306731200 562
EM2502 582
EM2504 582
EM3414 . . . . . 430, 436, 442, 581
EM3416 . . . . . 430, 436, 442, 448, 581
EM3469 . . . . . 430, 436, 442, 580
EM3471 . . . . . 430, 436, 442, 448, 580
EM4466 442
EM4468 . . . . . 436, 442, 448
EM9304 . . . . . 430, 436, 442, 579
EM9306 . . . . . 430, 436, 442, 448, 579

H
HF100 447-448
HF32 429-430
HF55 435-436
HF80 441-442
HF85 . . . . . 425, 431, 437, 443
HF85B 426, 432, 438, 444
HF86 . . . . . 427, 433, 439, 445
HF86B 428, 434, 440, 446

M
M402 . . . . . 430, 436, 442, 448, 584, 586
M403 585-586
MF 310-314
MTH 285-309
MTS 283-284

N
NF06 . . . . . 362-363, 365
NF10 363-365
NFQF 370-371
NS06 . . . . . 366-367, 369
NS10 367-369

P
PCGNL16CA 566
PF84 . . . . . 401, 403, 405, 407, 409, 411
PM06 . . . . . 327, 329
PM07 . . . . . 327, 329, 402
PM08 . . . . . 327, 329, 404
PM11 . . . . . 327, 329, 406
PM15 . . . . . 327, 329, 408
PM19 . . . . . 330, 410
PM50 331
PM55 331
PM60 331
PM70 331
PM75 331
PM80 331
PMX06 348
PMX08 348
PMX12 348
PMX16 348
PMX5 349
PMX6 350

R
R396.18 265
R396.19 265-266

S
SAH 459-465
SCGL 566
SD100 145
SD101 138
SD103 139
SD105 140
SD107 141
SD1103 25-28
SD1103A 29-32
SD1105A 33-37
SD200 74
SD203 . . . . . 38-44, 73, 77, 84, 94
SD203A 45-50, 71-72, 78-80, 85-86, 89-90, 95
SD205 96
SD205A 51-59, 81-83, 87-88, 92-93
SD206 60
SD206A 61
SD207A 62-64
SD216A 65-66
SD22 98-102
SD230A 67-68
SD245A 69
SD26 103-107
SD265A 70
SD403 162-163
SD405 165
SD408 166-167
SD502 183-185
SD503 186-191
SD504 192-197
SD505 198-199
SD542 200
SD572 201-202
SD602 206
SFH 469-473
SR80 381-383
SR81 384-386
SR82 387
SSRCL 566
STGCL 566
STRCL 566
STSCL 566
STTCL 566

T
TM 260-263

13
13NMS. 267

396
396.19 268-269

C
CCGT 593-594
CCGW 593
CCMT 593-594
CCMW 593
CNMG 595
CPGT 594

L
LNEG 413, 423

P
P00 389
P0 389
P1 389
P2 389
P3 389
P4 389

R
R396.19 269
RNAX 413, 423

S
SCGX 594
SCMT 594
SD100 142-144
SD400 168-169

T
TCGT 593-594
TCGW 593
TCMT 593-594
TCMW 593

W
WBGT 593
WBGW 593
WCMX 217

At Seco we make every effort to give you the best in drilling, reaming, threading and boring
Our comprehensive range of holemaking tools are second-to-none

We have years of experience of 'challenging' holemaking applications. Our R&D and metal cutting expertise consistently yields new and more productive solutions. But most importantly, we pride ourselves on offering the highest service level, and on being engaged in making our customers as cost-effective and competitive as possible.

Seco Tools will take responsibility and assist in all areas to create the hole, including technical troubleshooting.
We supply complete holemaking know-how, including drilling, reaming, threading and boring – finding ways and processes making you more competitive. And we offer great simplicity by streamlining administration, support and service through one contact. The result?

You don´t need to worry about holemaking, we take care of the complete process.

As a Seco customer, you are offered:

- One stop shopping of high quality metal cutting tools, solutions and services
- Simplicity of contacts, purchasing, stock, technical support, consultancy and process solutions
- A range of high performance holemaking tools covering drilling, reaming, threading and boring
- One supplier responsible for the quality of the finished hole - or even for the complete machining of the finished part
- Complete holemaking know-how, including drilling, reaming, threading and boring
- Greatly increased process security with close cooperation together with one knowledgeable supplier
- The highest tool quality offering great productivity and cost reduction opportunities



What are you looking for in making a hole?

	Drilling			Threading				Boring		Reaming		
	Seco Feedmax™ Seco Feedmax Universal	Crownloc® Crownloc®Plus	Perfomax®	Threadmaster™	Threadmaster™ Taps		Thread milling 396.18/396.19	EPB 750, EPB 610 Rough boring	EPB 760, EPB 780 EPB 790, EPB 780..L Fine boring	PrecimasterPlus™/ Nanofix™	Bifix®/ Precifix™	Xfix™
Page	14-133	134-175	176-240	248-264	270-314		265-266	483-500, 549-572	501-548	318-375	376-418	419-455
												
IT	7-9	9-10	12					9-10	5-6	6-8	6-7	6-7
	0,02	0,05	-		Follow the pre-bore	Follow the pre-bore		0,005	0,005	Follow the pre-bore	Follow the pre-bore	Follow the pre-bore
	0,02	0,05	-					0,02	0,01	0,007	0,005	0,005
$\sqrt{R_a}$	1,0	1,6	2,0					1,0	0,6	0,6	0,25	0,6
tctr	-	-	-		6H 6HX 6G 2B Normal	6HX 6GX		-	-	-	-	-
Thread form	-	-	-	M MF UNC UNF NPT NPTF BSP	M MF UNC UNF G NPT NPTF	M MF	ISO UN W NPT NPTF BSPT	-	-	-	-	-

Positioning accuracy
Seco Feedmax, A750 rough boring heads and the whole range of fine boring heads are the holemaking tools that offer the best positioning accuracy.

Hole geometry
For excellent hole geometry, such as as roundness and straightness, all of Seco's drilling, boring and reaming tools offer the same high and consistent quality. Seco's boring heads will always guarantee the best results on straightness.

Surface finish
For a really smooth hole surface Bifix/Precifix is your first choice, and Seco's fine boring heads offer a full range of machining capabilities.

tctr = Thread Tolerance Class

IT = Hole tolerance

TOOL GUIDE

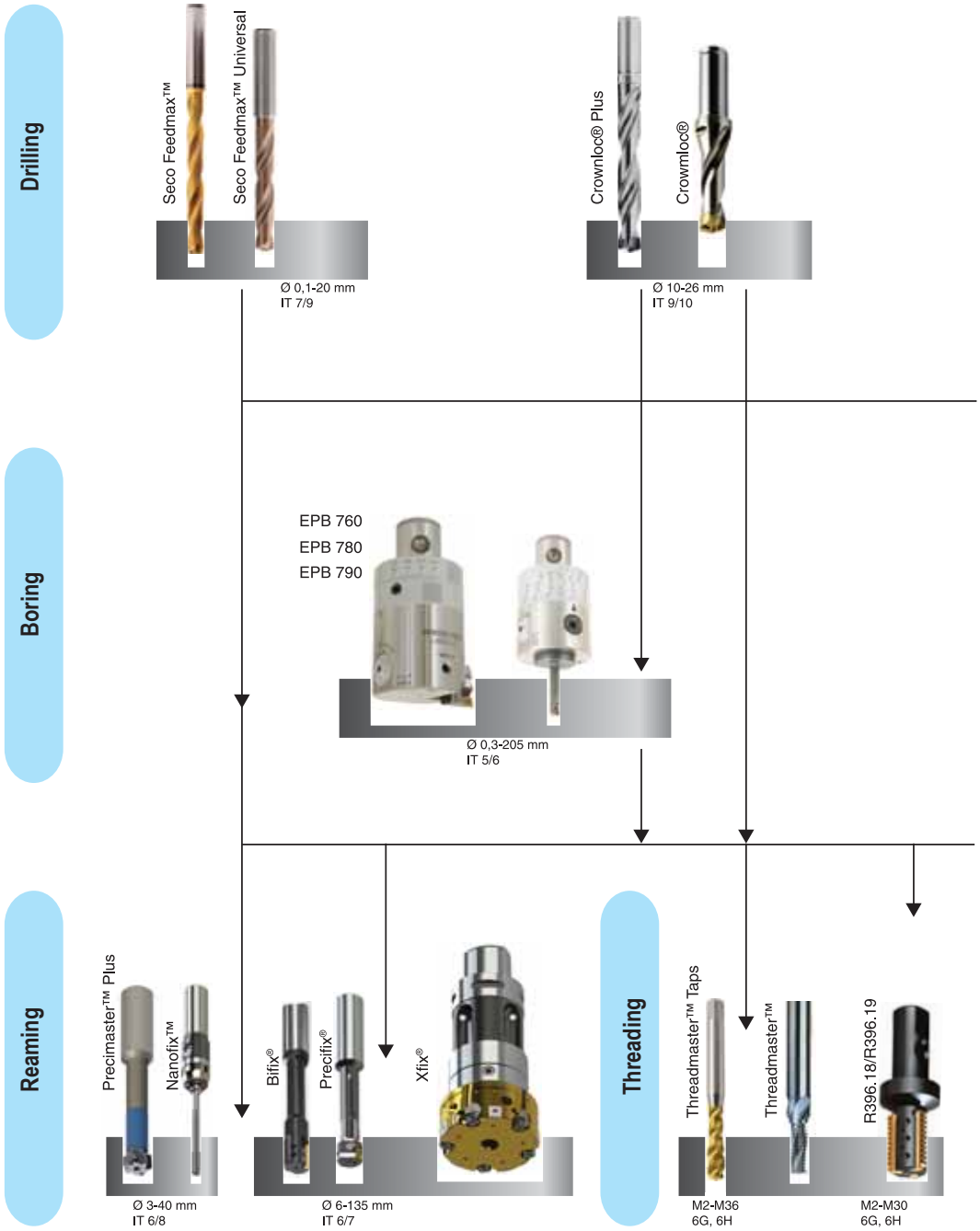
Drilling
Seco Feedmax™
Seco Feedmax™ Universal
Ø 0,1-20 mm
IT 7/9
Crownloc® Plus
Crownloc®
Ø 10-26 mm
IT 9/10
Boring
EPB 760
EPB 780
EPB 790
Ø 0,3-205 mm
IT 5/6
Reaming
Precimaster™ Plus
Nanofix™
Ø 3-40 mm
IT 6/8
Bifix®
Precifix®
Xfix®
Ø 6-135 mm
IT 6/7
Threading
Threadmaster™ Taps
Threadmaster™
R396.18/R396.19
M2-M36
6G, 6H
M2-M30
6G, 6H

TOOL GUIDE

Cast holes



Ø 15-85 mm
IT 12

Ø 60-160 mm
IT 12



Ø 18-205 mm
IT 9/10

Rough boring

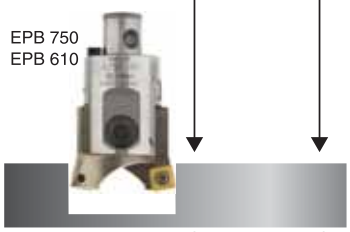

Ø 18-205 mm
IT 9/10

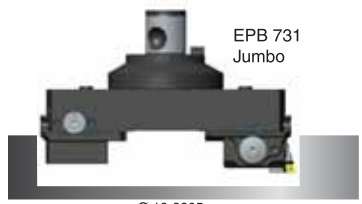

Ø 18-3205 mm
* IT 9/10
* * IT 5/6

Fine boring



Ø 0,3-205 mm
IT 5/10

Seco Feedmax, Crownloc and Perfomax are used to drill holes from 0,1 to 160 mm in diameter, with tolerances from IT8 to IT12.
For already cast holes, rough boring or semi-finishing is often used, with Bridge Bars and Jumbo Bridge Bars used for the large diameters.
Finally, high quality holes are made with reaming and fine boring heads, reaching tolerances of IT5 or IT6.
* Rough IT9/10, ** Fine IT 5/6

Threadmaster DTM, TM, TM2, 396.18 and 396.19; The same cutter could be used for machining right and left hand threads. Metric and UN versions are only for internal threading. It's also possible to make all types of tolerances with the same cutter.

Threadmaster Tap: Available in the most popular threads and tolerances in both cutting and forming taps.

Drilling at Seco

- Seco can offer one stop shopping of high quality drills, solutions and services
- We have years of experience in 'challenging' drill applications
- Seco has a full range of drill products that fits all applications and materials in all industry segments, like Automotive, Energy, Medical etc.
- The wide diameter range of Seco drills from 1 – 85 mm with the Feedmax™ (solid carbide drills), Crownloc® (exchangeable tip drills) and Perfomax® (Indexable drills), covers the most common thread sizes in the market
- Now Seco is releasing a new solid carbide drill line, Seco Feedmax™ Universal, that makes Seco's offer complete
- More information about the drill products can be found at, www.secotools.com

Threading at Seco

- Seco can now offer all types of threading methods
- For many years Seco have been the market leader in thread turning with the well known Snap-Tap® products
- During the last ten years Seco has been established as a leading supplier of tools for thread milling, with the solid Threadmaster™ and Drilling Threadmaster as well as 396.19 with indexable carbide inserts
- Seco is also supplier of chasers for the Oil & Gas industry
- Now Seco is also supplying threading taps which makes Seco's product offering for threading tools complete
- All threading products are supported by the 'Threading Wizard' machining guidance software, available from www.secotools.com

Thread tapping

- Available as both cutting and forming taps
- An easy, well known and productive threading process
- Can be used for both rotating and non-rotating applications
- Good chip control
- Easy to thread in deep holes



Drilling range – Choice of drill

Seco Feedmax™
Solid carbide drills



PRODUCTIVITY
- High feeds and cutting speeds
- Close tolerance holes
- For applications with high stability
- For all workpiece materials

Crownloc® & Crownloc®Plus
Exchangeble crown drills



FLEXIBILITY
- Exchangeable carbide tips
- Geometries for different workpiece materials
- No regrinding
- Several tip diameters for each drill body

Perfomax®
Indexable insert drills



COST EFFECTIVENESS
- Grades and geometries for all workpiece materials
- Square inserts for low cost/hole
- Drilling, plunging, crossing holes with angled entrance or exit, boring, etc....
- High application security

For high performance machining



High performance and Universal solutions
What are you looking for in your solid drill application?

Seco Feedmax™ Universal – Versatile general performance solid carbide drill

Seco Feedmax™ Universal is a multi purpose general performance solid carbide drill, that can be used in a wide range of materials and applications in all industry segments. Thanks to the design with a strong self centering 140 degree drill point, polished chip flutes and the excellent quality of the drill - high capacity utilization, application security and versatility is provided at a very low cost.
With Seco Feedmax™ Universal stock holding cost can be reduced and greater machining flexibility is offered, leading to reduced set-up time.
Seco Feedmax™ Universal is an alternative to Seco Feedmax in operations when versatility, flexibility and reduced stock holding cost are the main targets.

Seco Feedmax™ – Productive high performance solid carbide drill

Seco Feedmax™ offers a unique combination of state-of-the-art carbide, coating- and geometry technology.
Seco Feedmax™ is designed for high productivity and low cost per hole with high feeds up to 0,70 mm/rev and high cutting speeds up to 220 m/min. With excellent centering capabilities - high hole quality is achieved with no need for centre drilling operations. Thanks to the modern coating with high hot hardness, the strong cutting edges with protective corner chamfers, high strength carbide rod, excellent chip evacuation capabilities and a superb cutting edge quality - a long and predictable tool life is achieved.
Seco Feedmax™ has a wide range of optimized geometries for different materials and applications, to obtain a good quality hole at the lowest cost.

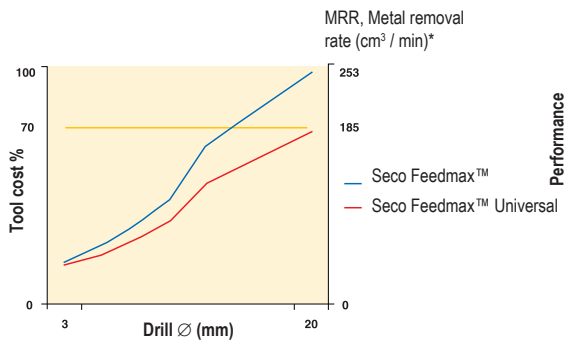

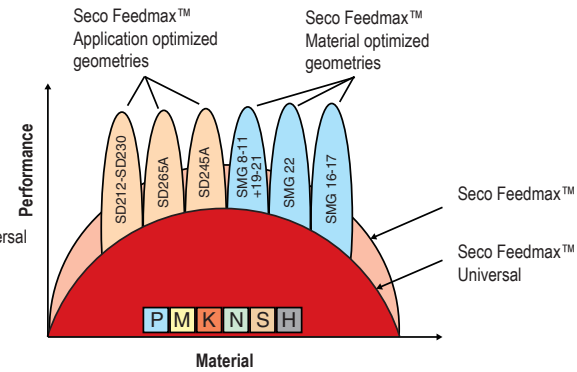

Tool life, lower cutting data

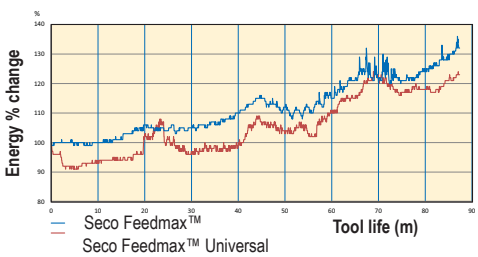

First hole is set as reference, 100% based on the spindle power
Cutting data
V_c = 90m/min
f = 0,15 mm/rev
Material =SMGP5-P6, SS2244,
DIN41CrMo4, AISI 4140

Tool life, high cutting data

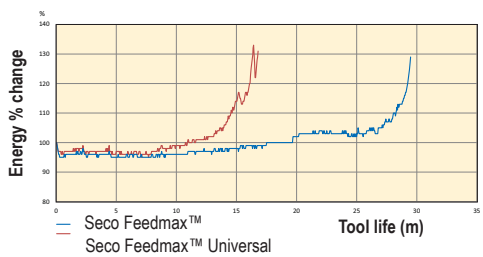

First hole is set as reference, 100% based on the spindle power
Cutting data
V_c = 160 m/min
f = 0,24 mm/rev
Material =SMGP5-P6, SS2244,
DIN41CrMo4, AISI 4140

Range overview

Seco Feedmax™	∅ Range	Drill depth	Drill ∅ tolerance	Hole tolerance (1)	Surface finish (2)
SD1103, SD1103A Universal  **Pages 25-32**	3-20	~ 3 x D	m7	IT 8-9	R_a 1-2 µm
SD1105A Universal  **Pages 33-37**	3-20	~ 5 x D	m7	IT 8-9	R_a 1-2 µm
SD203, SD203A  **Pages 38-50**	2-20	~ 3 x D	m7	IT 8-9	R_a 1-2 µm
SD205A  **Pages 51-59**	2-20	~ 5 x D	m7	IT 8-9	R_a 1-2 µm
SD206, SD206A  **Pages 60-61**	0,7-2,0	~ 6 x D	h6	IT 9	R_a 1-2 µm

1) Variations can occur depending on the material and the cutting data used.
2) Drill depth, cutting data, coolant pressure and material can cause deterioration of the surface finish.

Range overview

Seco Feedmax™	∅ Range	Drill depth	Drill ∅ tolerance	Hole tolerance (1)	Surface finish (2)
SD207A  **Pages 62-64**	4,5-20	~ 7 x D	m7	IT 9	R_a 1-3 µm
SD216A  **Pages 65-66**	3-12	~ 16 x D	m7	IT 9	R_a 1-3 µm
SD230A  **Pages 67-68**	4-10	~ 30 x D	m7	IT 9	R_a 1-3 µm
SD245A  **Page 69**	5-14	~ 5 x D	m7	IT 8	R_a 1-2 µm
SD265A  **Page 70**	6-16	~ 5 x D	js6	IT 7	R_a 1-2 µm

1) Variations can occur depending on the material and the cutting data used.
2) Drill depth, cutting data, coolant pressure and material can cause deterioration of the surface finish.

Range overview

Seco Feedmax™	∅ Range	Drill depth	Drill ∅ tolerance	Hole tolerance (1)	Surface finish (2)
Chamfer drills SD203A, SD205A  **Pages 71-72**	3-20	~ 3 x D, ~ 5 x D	m7	IT 8-9	R_a 1-2 µm
SD203A-M, SD205A-M Superalloys  **Pages 77-83**	3-20	~ 3 x D, ~ 5 x D	m7	IT 8-9	R_a 1-2 µm
SD203A-T, SD205A-T Titanium alloys  **Pages 84-88**	3-20	~ 3 x D, ~ 5 x D	m7	IT 8-9	R_a 1-2 µm
SD203A-N Aluminium  **Pages 89-90**	2,5-14	~ 3 x D	m7	IT 8-9	R_a 1-2 µm
SD205A-C1, -C2 Diamond coated drills for composites  **Pages 92-93**	3-12	~ 5 x D	m7	-	-

1) Variations can occur depending on the material and the cutting data used.
2) Drill depth, cutting data, coolant pressure and material can cause deterioration of the surface finish.

Range overview

Seco Feedmax™	∅ Range	Drill depth	Drill ∅ tolerance	Hole tolerance	Surface finish
SD205-CX1, -CX2, -CX31 PCD drills for composites  **Pages 94-96**	4-8	~ 5 x D	m7	-	-
SD22  **Pages 98-102**	0,1-2,0	~ 2 x D	0,005/0	-	-
SD26  **Pages 103-107**	0,1-2,0	~ 6 x D	0/-0,004	-	-

1) Variations can occur depending on the material and the cutting data used.
2) Drill depth, cutting data, coolant pressure and material can cause deterioration of the surface finish.

Code key Seco Feedmax™ Universal

Type of drill
Solid carbide drill:
SD1103: ~3 x D
SD1105: ~5 x D

SD1105	A	-	0850	-	049	-	10	R	1

Drill diameter

Shank diameter

Right hand rotation

Internal through coolant

Drilling depth

Type of shank
1. Cylindrical



Code key Solid carbide drill

Type of drill
Solid carbide drill:
SD203: ~3 x D
SD205: ~5 x D
SD206: ~6 x D
SD207: ~7 x D
SD216: ~16 x D
SD230: ~30 x D
SD245: ~5 x D
SD265: ~5 x D
SD22: ~2 x D
SD26: ~6 x D

M - Geometry for superalloys
T- Geometry for titanium alloys
N- Geometry for aluminium
C1 - Geometry for CFRP and exiting in CFRP
C2 - Geometry for CFRP and exiting in i.e. Ti or Al
CX1/CX2/CX3 - PCD drills for CFRP and GFRP

SD205	A	-	9.5	-	45	-	10	R	1	-	M

Drill diameter

Shank diameter

Right hand rotation

Internal through coolant

Drilling depth

Type of shank
1. Cylindrical
5. Whistle Notch

Set up

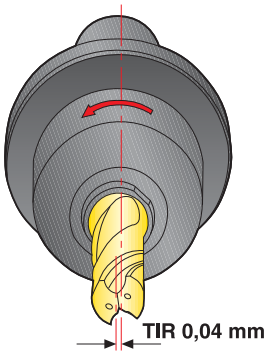

Holding/run-out

Drills with cylindrical shanks can be used with Shrinkfit holders, hydraulic chucks or collet chucks. Total indicated run-out <0,04 mm.
Keep the total indicated run-out of the drill within 0,04 mm measured in the spindle.

Stability

The stability of the application is important to obtain the best tool life and hole accuracy. Check the condition of the machine spindle, fixture and fixturing of the component to secure maximum stability and rigidity. Unstable conditions can cause tool breakages.

Tool life

Drills should not be used with flank wear exceeding 0,1–0,3 mm measured at the largest point.

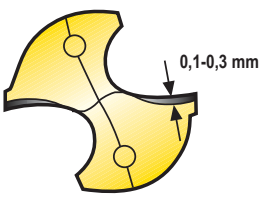

Recommended tool holders

For best result use holders:
Type 5603 - Shrinkfit holders, DIN type
Type 5834 - Hydraulic chucks
Type 5672 - High precision collet chucks
For more information see EPB Tooling systems catalogue

Shrinkfit holder

(For cylindrical, R1 shanks only)



Hydraulic chuck

(For cylindrical, -R1 shanks only)



High precision collet chucks

(For cylindrical, R1 shanks only)



Machining methods

Hole entrance on a machined surface

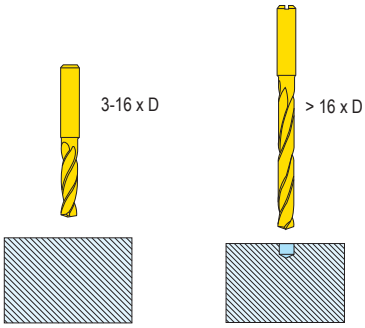

No pre-drilling or entrance feed needed.

When using a longer drill it´s recommended to drill a pilot hole.

Angled hole exits

Before hole exit reduce the feed/rev by 50%.

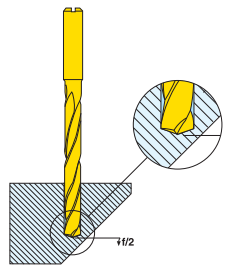

or use SD245A drills.

Irregular/angled hole entrance

If irregular or angle entrance use pre operations accordingly

Pre drill with a short standard Feedmax

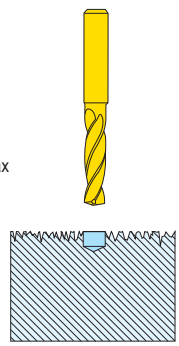

Irregular hole entrance

Pre-machining alternatives



Machine a flat using an end mill from the Seco range

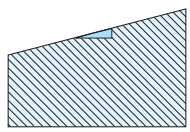

Angled hole entrance

Coolant recommendations

Coolant pressure*
Minimum recommended coolant pressure 10 bar with ≤ 5 x D
Minimum recommended coolant pressure 30 bar with > 5 x D
Minimum recommended coolant pressure 40 bar with > 16 x D

Coolant mix
Recommended emulsion mix 6-8%. When drilling in stainless steels, superalloys and high strength steels a mix of 10% is recommended.

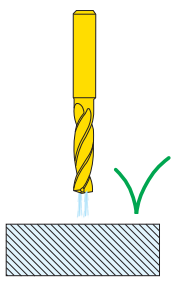

First choice

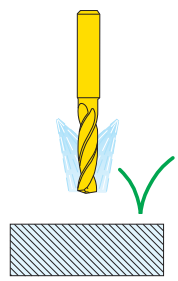

≤ 5 x D

* If lower coolant pressure is used adjust by reducing cutting data accordingly.

Machining methods - SD216A (16 x D) up to SD230A (30 x D)
Step by step

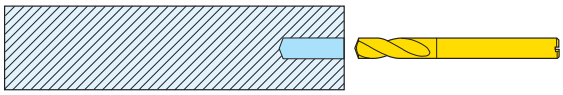

1. Drill a pilot hole 2-3 x D. Use a standard drill with the same diameter i.e. SD203A or SD1103 (with 140° point angle).

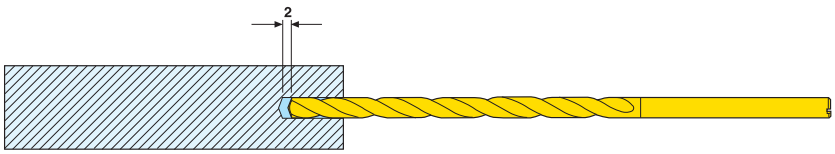

2. Enter the hole with the machine spindle stopped or use a low rpm (500). Stop 2 mm above the pilot hole depth.

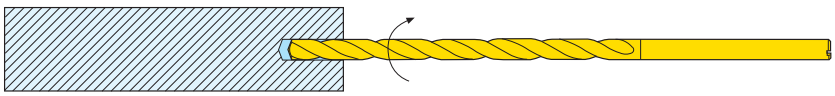

3. Start the machine spindle and the coolant, drill with the recommended cutting data. (No peck drilling).

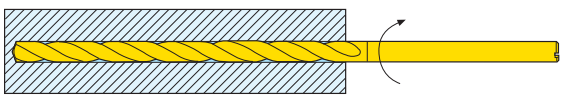

4. When reaching full depth, reduce the rpm to 500 and then retract the drill with 4 times the work feed to avoid retraction marks.

Machining methods – Micro drills

Pilot hole

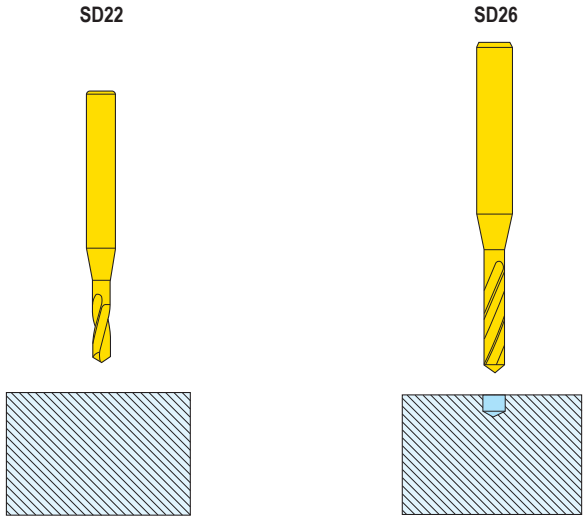

For optimal hole tolerance and positioning accuracy use an SD22 pilot drill of the same diameter.
Below 1 mm diameter drill we highly recommend to use a pilot drill.

Pecking

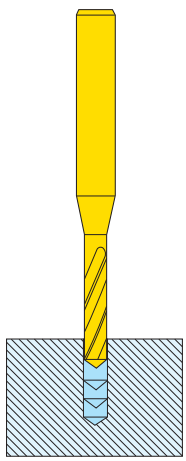

For long chipping materials a pecking cycle should be used.
Generally peck every 1 x D drilling depth.

Seco Feedmax™ Universal – SD1103

Drilling depth ~ 3 x D

Cylindrical shank DIN 6537A



- External coolant
- For cutting data see page 120
- Coating: AlCrN
- Hole tolerance: IT8-9

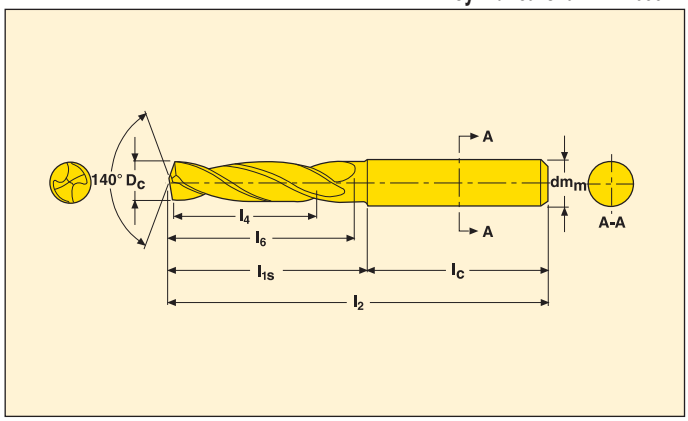

D_c m7 (mm)	D_c m7 (inch)	Reamer size*	Tap thread type	Forming tap	l_4	Part No.	Dimensions in mm				
							l_2	l_{1s}	l_c	l_6	dm_m h6
3,000	–	–	–	–	14	SD1103-0300-014-06R1	62	26	36	20	6
3,100	–	–	–	–	14	SD1103-0310-014-06R1	62	26	36	20	6
3,175	1/8	–	–	–	14	SD1103-0318-014-06R1	62	26	36	20	6
3,200	–	–	–	–	14	SD1103-0320-014-06R1	62	26	36	20	6
3,250	–	–	–	M3,5	14	SD1103-0325-014-06R1	62	26	36	20	6
3,300	–	–	M4	–	14	SD1103-0330-014-06R1	62	26	36	20	6
3,400	–	–	–	–	14	SD1103-0340-014-06R1	62	26	36	20	6
3,500	–	–	UNC8-32 / MF4X0,5 / UNF8-36	–	14	SD1103-0350-014-06R1	62	26	36	20	6
3,572	9/64	–	–	–	14	SD1103-0357-014-06R1	62	26	36	20	6
3,600	–	–	–	–	14	SD1103-0360-014-06R1	62	26	36	20	6
3,650	–	–	–	–	14	SD1103-0365-014-06R1	62	26	36	20	6
3,700	–	–	M4,5	M4	14	SD1103-0370-014-06R1	62	26	36	20	6
3,800	–	–	–	–	17	SD1103-0380-017-06R1	66	30	36	24	6
3,900	–	4H7	UNC10-24	–	17	SD1103-0390-017-06R1	66	30	36	24	6
3,969	5/32	–	–	–	17	SD1103-0397-017-06R1	66	30	36	24	6
4,000	–	–	–	–	17	SD1103-0400-017-06R1	66	30	36	24	6
4,100	–	–	UNF10-32	–	17	SD1103-0410-017-06R1	66	30	36	24	6
4,200	–	–	M5	–	17	SD1103-0420-017-06R1	66	30	36	24	6
4,300	–	–	–	–	17	SD1103-0430-017-06R1	66	30	36	24	6
4,366	11/64	–	–	–	17	SD1103-0437-017-06R1	66	30	36	24	6
4,400	–	–	UNC12-24 / MF5X0,5	–	17	SD1103-0440-017-06R1	66	30	36	24	6
4,500	–	–	UNC12-24 / MF5X0,5	–	17	SD1103-0450-017-06R1	66	30	36	24	6
4,600	–	–	–	M5	17	SD1103-0460-017-06R1	66	30	36	24	6
4,650	–	–	–	M5	17	SD1103-0465-017-06R1	66	30	36	24	6
4,700	–	–	–	–	17	SD1103-0470-017-06R1	66	30	36	24	6
4,763	3/16	–	–	MF5	20	SD1103-0476-020-06R1	66	30	36	28	6
4,800	–	–	–	MF5	20	SD1103-0480-020-06R1	66	30	36	28	6
4,900	–	5H7	M6	–	20	SD1103-0490-020-06R1	66	30	36	28	6
5,000	–	–	UNC1/4-20	–	20	SD1103-0500-020-06R1	66	30	36	28	6
5,100	–	–	UNC1/4-20	–	20	SD1103-0510-020-06R1	66	30	36	28	6
5,159	13/64	–	MF6X0,75	–	20	SD1103-0516-020-06R1	66	30	36	28	6
5,200	–	–	MF6X0.75	–	20	SD1103-0520-020-06R1	66	30	36	28	6
5,300	–	–	–	–	20	SD1103-0530-020-06R1	66	30	36	28	6
5,400	–	–	UNF1/4-28	–	20	SD1103-0540-020-06R1	66	30	36	28	6
5,500	–	–	UNF1/4-28	–	20	SD1103-0550-020-06R1	66	30	36	28	6
5,550	–	–	–	M6	20	SD1103-0555-020-06R1	66	30	36	28	6
5,556	7/32	–	–	–	20	SD1103-0556-020-06R1	66	30	36	28	6
5,600	–	–	–	–	20	SD1103-0560-020-06R1	66	30	36	28	6
5,700	–	–	–	–	20	SD1103-0570-020-06R1	66	30	36	28	6
5,800	–	6H6	–	–	20	SD1103-0580-020-06R1	66	30	36	28	6
5,900	–	6H6/6H7	–	–	20	SD1103-0590-020-06R1	66	30	36	28	6
5,953	15/64	–	M7	–	20	SD1103-0595-020-06R1	66	30	36	28	6

* For further information regarding reaming (see page 317) and threading (see page 249).

Seco Feedmax™ Universal – SD1103

Drilling depth ~ 3 x D

Cylindrical shank DIN 6537A



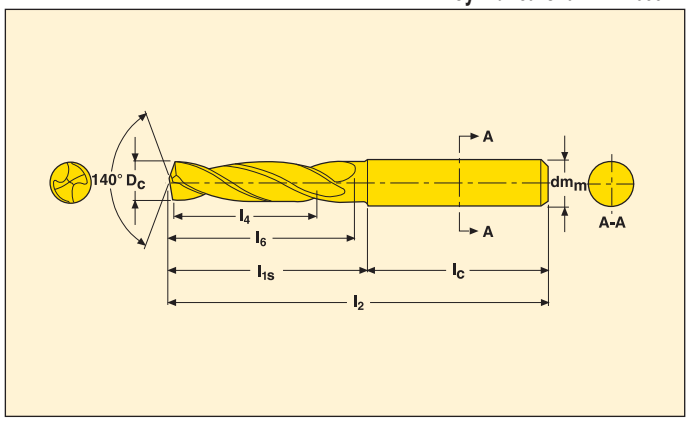

- External coolant
- For cutting data see page 120
- Coating: AlCrN
- Hole tolerance: IT8-9

D_c m7 (mm)	D_c m7 (inch)	Reamer size*	Tap thread type	Forming tap	l_4	Part No.	Dimensions in mm				
							l_2	l_{1s}	l_c	l_6	dm_m h6
6,000	–	–	NPTF1/16	–	20	SD1103-0600-020-06R1	66	30	36	28	6
6,100	–	–	NPTF1/16	–	24	SD1103-0610-024-08R1	79	43	36	34	8
6,200	–	–	–	–	24	SD1103-0620-024-08R1	79	43	36	34	8
6,300	–	–	–	–	24	SD1103-0630-024-08R1	79	43	36	34	8
6,350	1/4	–	–	–	24	SD1103-0635-024-08R1	79	43	36	34	8
6,400	–	–	–	–	24	SD1103-0640-024-08R1	79	43	36	34	8
6,500	–	–	UNC5/16-18	–	24	SD1103-0650-024-08R1	79	43	36	34	8
6,600	–	–	UNC5/16-18	–	24	SD1103-0660-024-08R1	79	43	36	34	8
6,747	17/64	–	–	–	24	SD1103-0675-024-08R1	79	43	36	34	8
6,800	–	7H6	M8	–	24	SD1103-0680-024-08R1	79	43	36	34	8
6,900	–	7H6/7H7	UNF5/16-24	–	24	SD1103-0690-024-08R1	79	43	36	34	8
7,000	–	–	MF8X1	–	24	SD1103-0700-024-08R1	79	43	36	34	8
7,100	–	–	–	–	29	SD1103-0710-029-08R1	79	43	36	41	8
7,144	9/32	–	–	–	29	SD1103-0714-029-08R1	79	43	36	41	8
7,200	–	–	MF8X0,75	–	29	SD1103-0720-029-08R1	79	43	36	41	8
7,300	–	–	–	–	29	SD1103-0730-029-08R1	79	43	36	41	8
7,400	–	–	–	–	29	SD1103-0740-029-08R1	79	43	36	41	8
7,500	–	–	–	–	29	SD1103-0750-029-08R1	79	43	36	41	8
7,541	19/64	–	–	–	29	SD1103-0754-029-08R1	79	43	36	41	8
7,550	–	–	–	MF8	29	SD1103-0755-029-08R1	79	43	36	41	8
7,600	–	–	–	–	29	SD1103-0760-029-08R1	79	43	36	41	8
7,700	–	–	–	–	29	SD1103-0770-029-08R1	79	43	36	41	8
7,800	–	8H6	–	–	29	SD1103-0780-029-08R1	79	43	36	41	8
7,900	–	–	–	–	29	SD1103-0790-029-08R1	79	43	36	41	8
7,938	5/16	–	–	–	29	SD1103-0794-029-08R1	79	43	36	41	8
8,000	–	–	UNC3/8-16	–	29	SD1103-0800-029-08R1	79	43	36	41	8
8,100	–	–	–	–	35	SD1103-0810-035-10R1	89	49	40	47	10
8,200	–	–	–	–	35	SD1103-0820-035-10R1	89	49	40	47	10
8,300	–	–	–	–	35	SD1103-0830-035-10R1	89	49	40	47	10
8,334	21/64	–	–	–	35	SD1103-0833-035-10R1	89	49	40	47	10
8,400	–	–	NPT1/8 / NPTF1/8	–	35	SD1103-0840-035-10R1	89	49	40	47	10
8,500	–	–	M10	–	35	SD1103-0850-035-10R1	89	49	40	47	10
8,600	–	–	–	–	35	SD1103-0860-035-10R1	89	49	40	47	10
8,700	–	–	–	–	35	SD1103-0870-035-10R1	89	49	40	47	10
8,731	11/32	–	–	–	35	SD1103-0873-035-10R1	89	49	40	47	10
8,800	–	9H6	G1/8 / MF10X1,25	–	35	SD1103-0880-035-10R1	89	49	40	47	10
8,900	–	9H6/9H7	–	–	35	SD1103-0890-035-10R1	89	49	40	47	10
9,000	–	–	MF10X1	–	35	SD1103-0900-035-10R1	89	49	40	47	10
9,100	–	–	–	–	35	SD1103-0910-035-10R1	89	49	40	47	10
9,128	23/64	–	–	–	35	SD1103-0913-035-10R1	89	49	40	47	10
9,200	–	–	MF10X0,75	–	35	SD1103-0920-035-10R1	89	49	40	47	10
9,300	–	–	–	–	35	SD1103-0930-035-10R1	89	49	40	47	10

* For further information regarding reaming (see page 317) and threading (see page 249).

Seco Feedmax™ Universal – SD1103

Drilling depth ~ 3 x D

Cylindrical shank DIN 6537A



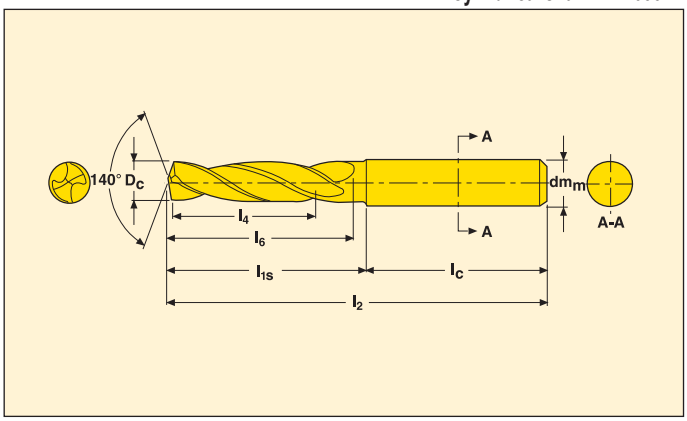

- External coolant
- For cutting data see page 120
- Coating: AlCrN
- Hole tolerance: IT8-9

D_c m7 (mm)	D_c m7 (inch)	Reamer size*	Tap thread type	Forming tap	l_4	Part No.	Dimensions in mm				
							l_2	l_{1s}	l_c	l_6	dm_m h6
9,400	–	–	UNC7/16-14	–	35	**SD1103-0940-035-10R1**	89	49	40	47	10
9,500	–	–	–	–	35	**SD1103-0950-035-10R1**	89	49	40	47	10
9,525	3/8	–	–	–	35	**SD1103-0953-035-10R1**	89	49	40	47	10
9,550	–	–	–	MF10	35	**SD1103-0955-035-10R1**	89	49	40	47	10
9,600	–	–	–	–	35	**SD1103-0960-035-10R1**	89	49	40	47	10
9,700	–	–	–	–	35	**SD1103-0970-035-10R1**	89	49	40	47	10
9,800	–	10H6/10H7	–	–	35	**SD1103-0980-035-10R1**	89	49	40	47	10
9,900	–	10H6/10H7	UNF7/16-20	–	35	**SD1103-0990-035-10R1**	89	49	40	47	10
9,922	25/64	–	–	–	35	**SD1103-0992-035-10R1**	89	49	40	47	10
10,000	–	–	–	–	35	**SD1103-1000-035-10R1**	89	49	40	47	10
10,200	–	–	M12	–	40	**SD1103-1020-040-12R1**	102	57	45	55	12
10,319	12/32	–	–	–	40	**SD1103-1032-040-12R1**	102	57	45	55	12
10,400	–	–	–	–	40	**SD1103-1040-040-12R1**	102	57	45	55	12
10,500	–	–	MF12X1,5	–	40	**SD1103-1050-040-12R1**	102	57	45	55	12
10,600	–	–	–	–	40	**SD1103-1060-040-12R1**	102	57	45	55	12
10,716	27/64	–	–	–	40	**SD1103-1072-040-12R1**	102	57	45	55	12
10,800	–	11H6/11H7	UNC1/2-13 / MF12X1,25	–	40	**SD1103-1080-040-12R1**	102	57	45	55	12
10,900	–	11H6/11H7	–	–	40	**SD1103-1090-040-12R1**	102	57	45	55	12
11,000	–	–	MF12X1 / NPTF1/4	–	40	**SD1103-1100-040-12R1**	102	57	45	55	12
11,100	–	–	NPT1/4	–	40	**SD1103-1110-040-12R1**	102	57	45	55	12
11,113	7/16	–	–	–	40	**SD1103-1111-040-12R1**	102	57	45	55	12
11,200	–	–	–	M12	40	**SD1103-1120-040-12R1**	102	57	45	55	12
11,300	–	–	–	–	40	**SD1103-1130-040-12R1**	102	57	45	55	12
11,400	–	–	–	–	40	**SD1103-1140-040-12R1**	102	57	45	55	12
11,500	–	–	UNF1/2-20	–	40	**SD1103-1150-040-12R1**	102	57	45	55	12
11,509	29/64	–	–	–	40	**SD1103-1151-040-12R1**	102	57	45	55	12
11,550	–	–	–	MF12	40	**SD1103-1155-040-12R1**	102	57	45	55	12
11,600	–	–	–	–	40	**SD1103-1160-040-12R1**	102	57	45	55	12
11,700	–	–	–	–	40	**SD1103-1170-040-12R1**	102	57	45	55	12
11,800	–	12H6/12H7	G1/4	–	40	**SD1103-1180-040-12R1**	102	57	45	55	12
11,900	–	12 H6/12 H7	–	–	40	**SD1103-1190-040-12R1**	102	57	45	55	12
11,906	15/32	–	–	–	40	**SD1103-1191-040-12R1**	102	57	45	55	12
12,000	–	–	M14	–	40	**SD1103-1200-040-12R1**	102	57	45	55	12
12,100	–	–	–	–	43	**SD1103-1210-043-14R1**	107	62	45	60	14
12,200	–	–	–	–	43	**SD1103-1220-043-14R1**	107	62	45	60	14
12,303	31/64	–	–	–	43	**SD1103-1230-043-14R1**	107	62	45	60	14
12,400	–	–	–	–	43	**SD1103-1240-043-14R1**	107	62	45	60	14
12,500	–	–	MF14X1,5	–	43	**SD1103-1250-043-14R1**	107	62	45	60	14
12,600	–	–	–	–	43	**SD1103-1260-043-14R1**	107	62	45	60	14
12,700	1/2	–	–	–	43	**SD1103-1270-043-14R1**	107	62	45	60	14
12,750	–	–	–	–	43	**SD1103-1275-043-14R1**	107	62	45	60	14
12,800	–	13H6/13H7	MF14X1,25	–	43	**SD1103-1280-043-14R1**	107	62	45	60	14

* For further information regarding reaming (see page 317) and threading (see page 249).

Seco Feedmax™ Universal – SD1103

Drilling depth ~ 3 x D

Cylindrical shank DIN 6537A



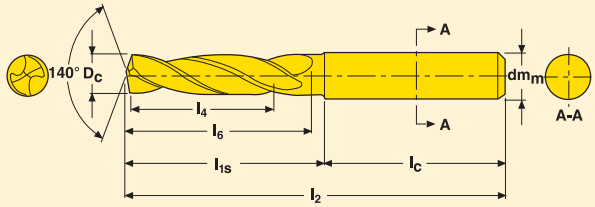

- External coolant
- For cutting data see page 120
- Coating: AlCrN
- Hole tolerance: IT8-9

D_C m7 (mm)	D_C m7 (inch)	Reamer size*	Tap thread type	Forming tap	l_4	Part No.	Dimensions in mm				
							l_2	l_{1S}	l_C	l_6	dm_m h6
12,900	–	13H6/13H7	–	–	43	SD1103-1290-043-14R1	107	62	45	60	14
13,000	–	–	MF14X1	–	43	SD1103-1300-043-14R1	107	62	45	60	14
13,100	–	–	–	M14	43	SD1103-1310-043-14R1	107	62	45	60	14
13,200	–	–	–	–	43	SD1103-1320-043-14R1	107	62	45	60	14
13,300	–	–	–	–	43	SD1103-1330-043-14R1	107	62	45	60	14
13,400	–	–	–	–	43	SD1103-1340-043-14R1	107	62	45	60	14
13,494	17/32	–	–	–	43	SD1103-1349-043-14R1	107	62	45	60	14
13,500	–	–	–	–	43	SD1103-1350-043-14R1	107	62	45	60	14
13,600	–	–	–	–	43	SD1103-1360-043-14R1	107	62	45	60	14
13,700	–	–	–	–	43	SD1103-1370-043-14R1	107	62	45	60	14
13,800	–	14H6/14H7	–	–	43	SD1103-1380-043-14R1	107	62	45	60	14
13,900	–	14H6/14H7	–	–	43	SD1103-1390-043-14R1	107	62	45	60	14
14,000	–	–	–	–	43	SD1103-1400-043-14R1	107	62	45	60	14
14,200	–	–	–	M16	45	SD1103-1420-045-16R1	115	67	48	65	16
14,288	9/16	–	–	–	45	SD1103-1429-045-16R1	115	67	48	65	16
14,500	–	–	MF16X1,5 / UNF5/8-18	–	45	SD1103-1450-045-16R1	115	67	48	65	16
14,700	–	–	–	–	45	SD1103-1470-045-16R1	115	67	48	65	16
14,750	–	–	–	–	45	SD1103-1475-045-16R1	115	67	48	65	16
14,800	–	15 H6/15 H7	–	–	45	SD1103-1480-045-16R1	115	67	48	65	16
15,000	–	–	MF16X1	–	45	SD1103-1500-045-16R1	115	67	48	65	16
15,100	–	–	–	M16	45	SD1103-1510-045-16R1	115	67	48	65	16
15,300	–	–	–	–	45	SD1103-1530-045-16R1	115	67	48	65	16
15,500	–	–	M18	–	45	SD1103-1550-045-16R1	115	67	48	65	16
15,700	–	–	–	–	45	SD1103-1570-045-16R1	115	67	48	65	16
15,800	–	16H6/16H7	–	–	45	SD1103-1580-045-16R1	115	67	48	65	16
15,875	5/8	16H6/16H7	–	–	45	SD1103-1588-045-16R1	115	67	48	65	16
16,000	–	–	–	–	45	SD1103-1600-045-16R1	115	67	48	65	16
16,500	–	–	MF18X1,5	–	51	SD1103-1650-051-18R1	123	75	48	73	18
17,000	–	–	MF18X1	–	51	SD1103-1700-051-18R1	123	75	48	73	18
17,500	–	–	M20	–	51	SD1103-1750-051-18R1	123	75	48	73	18
18,000	–	–	–	–	51	SD1103-1800-051-18R1	123	75	48	73	18
18,500	–	–	MF20X1,5	–	55	SD1103-1850-055-20R1	131	81	50	79	20
19,000	–	–	G1/2 / MF20X1	–	55	SD1103-1900-055-20R1	131	81	50	79	20
19,050	3/4	–	–	–	55	SD1103-1905-055-20R1	131	81	50	79	20
19,500	–	–	M22	–	55	SD1103-1950-055-20R1	131	81	50	79	20
20,000	–	–	–	–	55	SD1103-2000-055-20R1	131	81	50	79	20

* For further information regarding reaming (see page 317) and threading (see page 249).

Seco Feedmax™ Universal – SD1103A



Cylindrical shank DIN 6537A

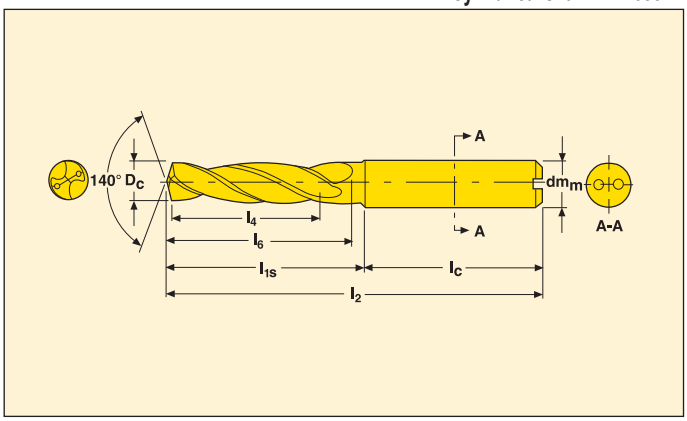

- Internal coolant
- For cutting data see page 120
- Coating: AlCrN
- Hole tolerance: IT8-9

D_c m7 (mm)	D_c m7 (inch)	Reamer size*	Tap thread type	Forming tap	l_4	Part No.	Dimensions in mm				
							l_2	l_{1s}	l_c	l_6	dm_m h6
3,000	–	–	–	–	14	SD1103A-0300-014-06R1	62	26	36	20	6
3,100	–	–	–	–	14	SD1103A-0310-014-06R1	62	26	36	20	6
3,175	1/8	–	–	–	14	SD1103A-0318-014-06R1	62	26	36	20	6
3,200	–	–	–	–	14	SD1103A-0320-014-06R1	62	26	36	20	6
3,250	–	–	–	M3,5	14	SD1103A-0325-014-06R1	62	26	36	20	6
3,300	–	–	M4	–	14	SD1103A-0330-014-06R1	62	26	36	20	6
3,400	–	–	–	–	14	SD1103A-0340-014-06R1	62	26	36	20	6
3,500	–	–	UNC8-32 / MF4X0,5 / UNF8-36	–	14	SD1103A-0350-014-06R1	62	26	36	20	6
3,572	9/64	–	–	–	14	SD1103A-0357-014-06R1	62	26	36	20	6
3,600	–	–	–	–	14	SD1103A-0360-014-06R1	62	26	36	20	6
3,650	–	–	–	–	14	SD1103A-0365-014-06R1	62	26	36	20	6
3,700	–	–	M4,5	M4	14	SD1103A-0370-014-06R1	62	26	36	20	6
3,800	–	–	–	–	17	SD1103A-0380-017-06R1	66	30	36	24	6
3,900	–	4H7	UNC10-24	–	17	SD1103A-0390-017-06R1	66	30	36	24	6
3,969	5/32	–	–	–	17	SD1103A-0397-017-06R1	66	30	36	24	6
4,000	–	–	–	–	17	SD1103A-0400-017-06R1	66	30	36	24	6
4,100	–	–	UNF10-32	–	17	SD1103A-0410-017-06R1	66	30	36	24	6
4,200	–	–	M5	–	17	SD1103A-0420-017-06R1	66	30	36	24	6
4,300	–	–	–	–	17	SD1103A-0430-017-06R1	66	30	36	24	6
4,366	11/64	–	–	–	17	SD1103A-0437-017-06R1	66	30	36	24	6
4,500	–	–	UNC12-24 / MF5X0,5	–	17	SD1103A-0450-017-06R1	66	30	36	24	6
4,600	–	–	–	–	17	SD1103A-0460-017-06R1	66	30	36	24	6
4,650	–	–	–	M5	17	SD1103A-0465-017-06R1	66	30	36	24	6
4,700	–	–	–	–	17	SD1103A-0470-017-06R1	66	30	36	24	6
4,763	3/16	–	–	–	20	SD1103A-0476-020-06R1	66	30	36	28	6
4,800	–	–	–	MF5	20	SD1103A-0480-020-06R1	66	30	36	28	6
4,900	–	5H7	–	–	20	SD1103A-0490-020-06R1	66	30	36	28	6
5,000	–	–	M6	–	20	SD1103A-0500-020-06R1	66	30	36	28	6
5,100	–	–	UNC1/4-20	–	20	SD1103A-0510-020-06R1	66	30	36	28	6
5,159	13/64	–	–	–	20	SD1103A-0516-020-06R1	66	30	36	28	6
5,200	–	–	MF6X0,75	–	20	SD1103A-0520-020-06R1	66	30	36	28	6
5,300	–	–	–	–	20	SD1103A-0530-020-06R1	66	30	36	28	6
5,400	–	–	–	–	20	SD1103A-0540-020-06R1	66	30	36	28	6
5,500	–	–	UNF1/4-28	–	20	SD1103A-0550-020-06R1	66	30	36	28	6
5,550	–	–	–	M6	20	SD1103A-0555-020-06R1	66	30	36	28	6
5,556	7/32	–	–	–	20	SD1103A-0556-020-06R1	66	30	36	28	6
5,600	–	–	–	–	20	SD1103A-0560-020-06R1	66	30	36	28	6
5,700	–	–	–	–	20	SD1103A-0570-020-06R1	66	30	36	28	6
5,800	–	6H6	–	–	20	SD1103A-0580-020-06R1	66	30	36	28	6
5,900	–	6H6/6H7	–	–	20	SD1103A-0590-020-06R1	66	30	36	28	6
5,953	–	–	–	–	20	SD1103A-0595-020-06R1	66	30	36	28	6
6,000	–	–	M7	–	20	SD1103A-0600-020-06R1	66	30	36	28	6

* For further information regarding reaming (see page 317) and threading (see page 249).

Seco Feedmax™ Universal – SD1103A



- Internal coolant
- For cutting data see page 120
- Coating: AlCrN
- Hole tolerance: IT8-9

Cylindrical shank DIN 6537A

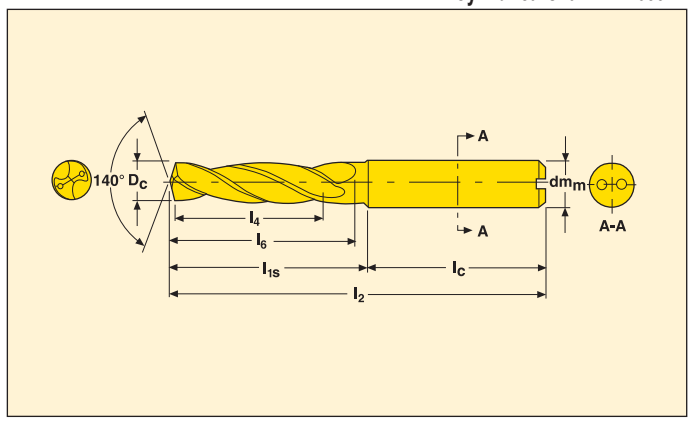

D_c m7 (mm)	D_c m7 (inch)	Reamer size*	Tap thread type	Forming tap	l_4	Part No.	Dimensions in mm				
							l_2	l_{1s}	l_c	l_6	dm_m h6
6,100	–	–	NPTF1/16	–	24	SD1103A-0610-024-08R1	79	43	36	34	8
6,200	–	–	–	–	24	SD1103A-0620-024-08R1	79	43	36	34	8
6,300	–	–	–	–	24	SD1103A-0630-024-08R1	79	43	36	34	8
6,350	1/4	–	–	–	24	SD1103A-0635-024-08R1	79	43	36	34	8
6,400	–	–	–	–	24	SD1103A-0640-024-08R1	79	43	36	34	8
6,500	–	–	–	–	24	SD1103A-0650-024-08R1	79	43	36	34	8
6,600	–	–	UNC5/16-18	–	24	SD1103A-0660-024-08R1	79	43	36	34	8
6,700	–	–	–	–	24	SD1103A-0670-024-08R1	79	43	36	34	8
6,747	17/64	–	–	–	24	SD1103A-0675-024-08R1	79	43	36	34	8
6,800	–	7H6	M8	–	24	SD1103A-0680-024-08R1	79	43	36	34	8
6,900	–	7H6/7H7	UNF5/16-24	–	24	SD1103A-0690-024-08R1	79	43	36	34	8
7,000	–	–	MF8X1	–	24	SD1103A-0700-024-08R1	79	43	36	34	8
7,100	–	–	–	–	29	SD1103A-0710-029-08R1	79	43	36	41	8
7,144	9/32	–	–	–	29	SD1103A-0714-029-08R1	79	43	36	41	8
7,200	–	–	MF8X0,75	–	29	SD1103A-0720-029-08R1	79	43	36	41	8
7,300	–	–	–	–	29	SD1103A-0730-029-08R1	79	43	36	41	8
7,400	–	–	–	–	29	SD1103A-0740-029-08R1	79	43	36	41	8
7,500	–	–	–	–	29	SD1103A-0750-029-08R1	79	43	36	41	8
7,541	19/64	–	–	–	29	SD1103A-0754-029-08R1	79	43	36	41	8
7,550	–	–	–	MF8	29	SD1103A-0755-029-08R1	79	43	36	41	8
7,600	–	–	–	–	29	SD1103A-0760-029-08R1	79	43	36	41	8
7,700	–	–	–	–	29	SD1103A-0770-029-08R1	79	43	36	41	8
7,800	–	8H6	–	–	29	SD1103A-0780-029-08R1	79	43	36	41	8
7,900	–	8H6/8H7	–	–	29	SD1103A-0790-029-08R1	79	43	36	41	8
7,938	5/16	–	–	–	29	SD1103A-0794-029-08R1	79	43	36	41	8
8,000	–	–	UNC3/8-16	–	29	SD1103A-0800-029-08R1	79	43	36	41	8
8,100	–	–	–	–	35	SD1103A-0810-035-10R1	89	49	40	47	10
8,200	–	–	–	–	35	SD1103A-0820-035-10R1	89	49	40	47	10
8,300	–	–	–	–	35	SD1103A-0830-035-10R1	89	49	40	47	10
8,334	21/64	–	–	–	35	SD1103A-0833-035-10R1	89	49	40	47	10
8,400	–	–	NPT1/8 / NPTF1/8	–	35	SD1103A-0840-035-10R1	89	49	40	47	10
8,500	–	–	M10	–	35	SD1103A-0850-035-10R1	89	49	40	47	10
8,600	–	–	–	–	35	SD1103A-0860-035-10R1	89	49	40	47	10
8,700	–	–	–	–	35	SD1103A-0870-035-10R1	89	49	40	47	10
8,731	11/32	–	–	–	35	SD1103A-0873-035-10R1	89	49	40	47	10
8,800	–	9H6	G1/8 / MF10X1,25	–	35	SD1103A-0880-035-10R1	89	49	40	47	10
8,900	–	9H6/9H7	–	–	35	SD1103A-0890-035-10R1	89	49	40	47	10
9,000	–	–	MF10X1	–	35	SD1103A-0900-035-10R1	89	49	40	47	10
9,100	–	–	–	–	35	SD1103A-0910-035-10R1	89	49	40	47	10
9,128	23/64	–	–	–	35	SD1103A-0913-035-10R1	89	49	40	47	10
9,200	–	–	MF10X0,75	–	35	SD1103A-0920-035-10R1	89	49	40	47	10
9,300	–	–	–	–	35	SD1103A-0930-035-10R1	89	49	40	47	10

* For further information regarding reaming (see page 317) and threading (see page 249).

Seco Feedmax™ Universal – SD1103A



- Internal coolant
- For cutting data see page 120
- Coating: AlCrN
- Hole tolerance: IT8-9

Cylindrical shank DIN 6537A

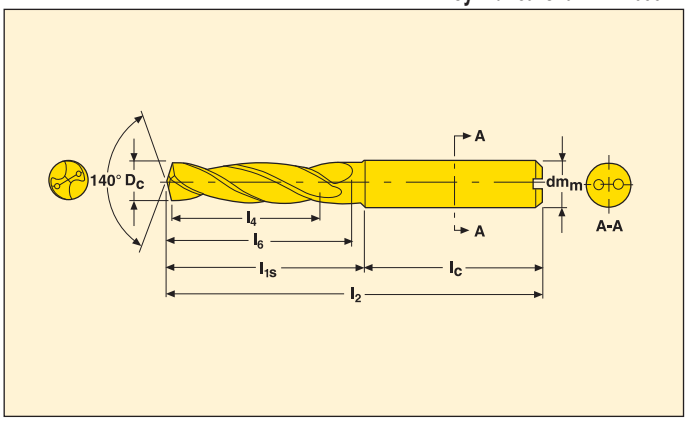

D_c m7 (mm)	D_c m7 (inch)	Reamer size*	Tap thread type	Forming tap	l_4	Part No.	Dimensions in mm				
							l_2	l_{1s}	l_c	l_6	dm_m h6
9,400	–	–	UNC7/16-14	–	35	SD1103A-0940-035-10R1	89	49	40	47	10
9,500	–	–	–	–	35	SD1103A-0950-035-10R1	89	49	40	47	10
9,525	3/8	–	–	–	35	SD1103A-0953-035-10R1	89	49	40	47	10
9,600	–	–	–	–	35	SD1103A-0960-035-10R1	89	49	40	47	10
9,700	–	–	–	–	35	SD1103A-0970-035-10R1	89	49	40	47	10
9,800	–	10H6/10H7	–	–	35	SD1103A-0980-035-10R1	89	49	40	47	10
9,900	–	10H6/10H7	UNF7/16-20	–	35	SD1103A-0990-035-10R1	89	49	40	47	10
9,922	25/64	–	–	–	35	SD1103A-0992-035-10R1	89	49	40	47	10
9,550	–	–	–	MF10	35	SD1103A-0955-035-10R1	89	49	40	47	10
10,000	–	–	–	–	35	SD1103A-1000-035-10R1	89	49	40	47	10
10,200	–	–	M12	–	40	SD1103A-1020-040-12R1	102	57	45	55	12
10,319	13/32	–	–	–	40	SD1103A-1032-040-12R1	102	57	45	55	12
10,400	–	–	–	–	40	SD1103A-1040-040-12R1	102	57	45	55	12
10,500	–	–	MF12X1,5	–	40	SD1103A-1050-040-12R1	102	57	45	55	12
10,600	–	–	–	–	40	SD1103A-1060-040-12R1	102	57	45	55	12
10,716	27/64	–	–	–	40	SD1103A-1072-040-12R1	102	57	45	55	12
10,800	–	11H6/11H7	UNC1/2-13 / MF12X1,25	–	40	SD1103A-1080-040-12R1	102	57	45	55	12
10,900	–	11H6/11H7	–	–	40	SD1103A-1090-040-12R1	102	57	45	55	12
11,000	–	–	MF12X1 / NPTF1/4	–	40	SD1103A-1100-040-12R1	102	57	45	55	12
11,100	–	–	NPT1/4	–	40	SD1103A-1110-040-12R1	102	57	45	55	12
11,113	7/16	–	–	–	40	SD1103A-1111-040-12R1	102	57	45	55	12
11,200	–	–	–	M12	40	SD1103A-1120-040-12R1	102	57	45	55	12
11,300	–	–	–	–	40	SD1103A-1130-040-12R1	102	57	45	55	12
11,400	–	–	–	–	40	SD1103A-1140-040-12R1	102	57	45	55	12
11,500	–	–	UNF1/2-20	–	40	SD1103A-1150-040-12R1	102	57	45	55	12
11,509	29/64	–	–	–	40	SD1103A-1151-040-12R1	102	57	45	55	12
11,550	–	–	–	MF12	40	SD1103A-1155-040-12R1	102	57	45	55	12
11,600	–	–	–	–	40	SD1103A-1160-040-12R1	102	57	45	55	12
11,700	–	–	–	–	40	SD1103A-1170-040-12R1	102	57	45	55	12
11,800	–	12H6/12H7	G1/4	–	40	SD1103A-1180-040-12R1	102	57	45	55	12
11,900	–	12H6/12H7	–	–	40	SD1103A-1190-040-12R1	102	57	45	55	12
11,906	15/32	12H6/12H7	–	–	40	SD1103A-1191-040-12R1	102	57	45	55	12
12,000	–	–	M14	–	40	SD1103A-1200-040-12R1	102	57	45	55	12
12,100	–	–	–	–	43	SD1103A-1210-043-14R1	107	62	45	60	14
12,200	–	–	–	–	43	SD1103A-1220-043-14R1	107	62	45	60	14
12,303	31/64	–	–	–	43	SD1103A-1230-043-14R1	107	62	45	60	14
12,400	–	–	–	–	43	SD1103A-1240-043-14R1	107	62	45	60	14
12,500	–	–	MF14X1,5	–	43	SD1103A-1250-043-14R1	107	62	45	60	14
12,600	–	–	–	–	43	SD1103A-1260-043-14R1	107	62	45	60	14
12,700	1/2	–	–	–	43	SD1103A-1270-043-14R1	107	62	45	60	14
12,750	–	–	–	–	43	SD1103A-1275-043-14R1	107	62	45	60	14
12,800	–	13H6/13H7	MF14X1,25	–	43	SD1103A-1280-043-14R1	107	62	45	60	14

* For further information regarding reaming (see page 317) and threading (see page 249).

Seco Feedmax™ Universal – SD1103A



- Internal coolant
- For cutting data see page 120
- Coating: AlCrN
- Hole tolerance: IT8-9

Cylindrical shank DIN 6537A

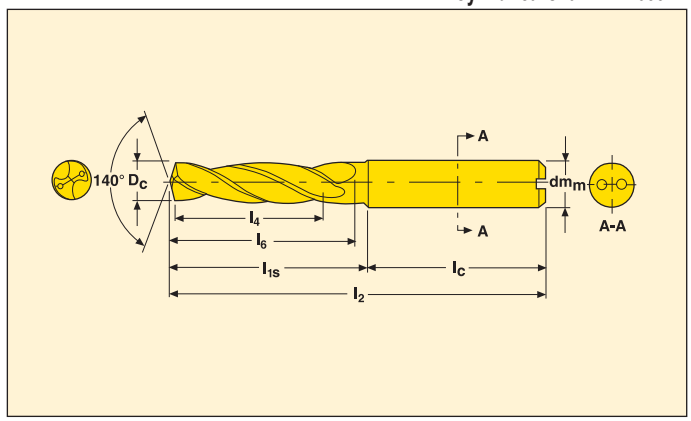

D_c m7 (mm)	D_c m7 (inch)	Reamer size*	Tap thread type	Forming tap	l_4	Part No.	Dimensions in mm				
							l_2	l_{1s}	l_c	l_6	dm_m h6
12,900	–	13H6/13H7	–	–	43	SD1103A-1290-043-14R1	107	62	45	60	14
13,000	–	–	MF14X1	–	43	SD1103A-1300-043-14R1	107	62	45	60	14
13,100	–	–	–	M14	43	SD1103A-1310-043-14R1	107	62	45	60	14
13,200	–	–	–	–	43	SD1103A-1320-043-14R1	107	62	45	60	14
13,300	–	–	–	–	43	SD1103A-1330-043-14R1	107	62	45	60	14
13,400	–	–	–	–	43	SD1103A-1340-043-14R1	107	62	45	60	14
13,494	17/32	–	–	–	43	SD1103A-1349-043-14R1	107	62	45	60	14
13,500	–	–	–	–	43	SD1103A-1350-043-14R1	107	62	45	60	14
13,600	–	–	–	–	43	SD1103A-1360-043-14R1	107	62	45	60	14
13,700	–	–	–	–	43	SD1103A-1370-043-14R1	107	62	45	60	14
13,800	–	14H6/14H7	–	–	43	SD1103A-1380-043-14R1	107	62	45	60	14
13,900	–	14H6/14H7	–	–	43	SD1103A-1390-043-14R1	107	62	45	60	14
14,000	–	–	M16	–	43	SD1103A-1400-043-14R1	107	62	45	60	14
14,200	–	–	–	–	45	SD1103A-1420-045-16R1	115	67	48	65	16
14,288	9/16	–	–	–	45	SD1103A-1429-045-16R1	115	67	48	65	16
14,500	–	–	MF16X1,5 / UNF5/8-18	–	45	SD1103A-1450-045-16R1	115	67	48	65	16
14,700	–	–	–	–	45	SD1103A-1470-045-16R1	115	67	48	65	16
14,750	–	–	–	–	45	SD1103A-1475-045-16R1	115	67	48	65	16
14,800	–	15H6/15H7	–	–	45	SD1103A-1480-045-16R1	115	67	48	65	16
15,000	–	–	MF16X1	–	45	SD1103A-1500-045-16R1	115	67	48	65	16
15,100	–	–	–	M16	45	SD1103A-1510-045-16R1	115	67	48	65	16
15,300	–	–	–	–	45	SD1103A-1530-045-16R1	115	67	48	65	16
15,500	–	–	M18	–	45	SD1103A-1550-045-16R1	115	67	48	65	16
15,700	–	–	–	–	45	SD1103A-1570-045-16R1	115	67	48	65	16
15,800	–	16H6/16H7	–	–	45	SD1103A-1580-045-16R1	115	67	48	65	16
15,875	5/8	16H6/16H7	–	–	45	SD1103A-1588-045-16R1	115	67	48	65	16
16,000	–	–	–	–	45	SD1103A-1600-045-16R1	115	67	48	65	16
16,500	–	–	MF18X1,5	–	51	SD1103A-1650-051-18R1	123	75	48	73	18
17,000	–	–	MF18X1	–	51	SD1103A-1700-051-18R1	123	75	48	73	18
17,500	–	–	M20	–	51	SD1103A-1750-051-18R1	123	75	48	73	18
18,000	–	–	–	–	51	SD1103A-1800-051-18R1	123	75	48	73	18
18,500	–	–	MF20X1,5	–	55	SD1103A-1850-055-20R1	131	81	50	79	20
19,000	–	–	G1/2 / MF20X1	–	55	SD1103A-1900-055-20R1	131	81	50	79	20
19,050	3/4	–	–	–	55	SD1103A-1905-055-20R1	131	81	50	79	20
19,500	–	–	M22	–	55	SD1103A-1950-055-20R1	131	81	50	79	20
20,000	–	–	–	–	55	SD1103A-2000-055-20R1	131	81	50	79	20

* For further information regarding reaming (see page 317) and threading (see page 249).

Seco Feedmax™ Universal – SD1105A

Drilling depth ~ 5 x D

Cylindrical shank DIN 6537A



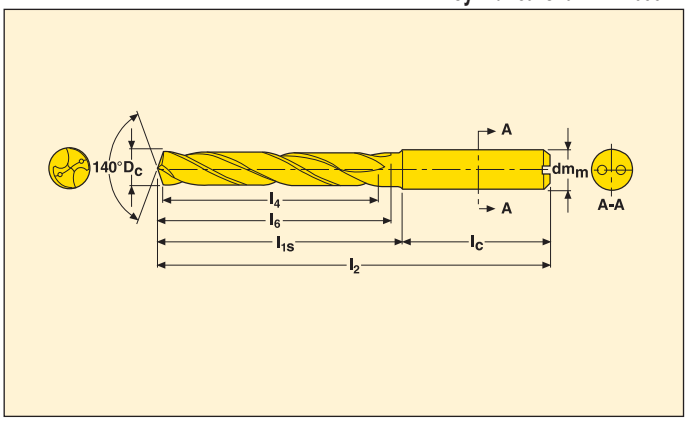

- Internal coolant
- For cutting data see page 120
- Coating: AlCrN
- Hole tolerance: IT8-9

D_c m7 (mm)	D_c m7 (inch)	Reamer size*	Tap thread type	Forming tap	l_4	Part No.	Dimensions in mm				
							l_2	l_{1s}	l_c	l_6	dm_m h6
3,000	–	–	–	–	23	SD1105A-0300-023-06R1	66	30	36	28	6
3,100	–	–	–	–	23	SD1105A-0310-023-06R1	66	30	36	28	6
3,175	1/8	–	–	–	23	SD1105A-0318-023-06R1	66	30	36	28	6
3,200	–	–	–	–	23	SD1105A-0320-023-06R1	66	30	36	28	6
3,250	–	–	–	M3,5	23	SD1105A-0325-023-06R1	66	30	36	28	6
3,300	–	–	M4	–	23	SD1105A-0330-023-06R1	66	30	36	28	6
3,400	–	–	–	–	23	SD1105A-0340-023-06R1	66	30	36	28	6
3,500	–	–	UNC8-32 / MF4X0,5 / UNF8-36	–	23	SD1105A-0350-023-06R1	66	30	36	28	6
3,572	9/64	–	–	–	23	SD1105A-0357-023-06R1	66	30	36	28	6
3,600	–	–	–	–	23	SD1105A-0360-023-06R1	66	30	36	28	6
3,650	–	–	–	–	23	SD1105A-0365-023-06R1	66	30	36	28	6
3,700	–	–	M4,5	M4	23	SD1105A-0370-023-06R1	66	30	36	28	6
3,800	–	–	–	–	29	SD1105A-0380-029-06R1	74	38	36	36	6
3,900	–	4H7	UNC10-24	–	29	SD1105A-0390-029-06R1	74	38	36	36	6
3,969	5/32	–	–	–	29	SD1105A-0397-029-06R1	74	38	36	36	6
4,000	–	–	–	–	29	SD1105A-0400-029-06R1	74	38	36	36	6
4,100	–	–	UNF10-32	–	29	SD1105A-0410-029-06R1	74	38	36	36	6
4,200	–	–	M5	–	29	SD1105A-0420-029-06R1	74	38	36	36	6
4,300	–	–	–	–	29	SD1105A-0430-029-06R1	74	38	36	36	6
4,366	11/64	–	–	–	29	SD1105A-0437-029-06R1	74	38	36	36	6
4,400	–	–	–	–	29	SD1105A-0440-029-06R1	74	38	36	36	6
4,500	–	–	UNC12-24 / MF5X0,5	–	29	SD1105A-0450-029-06R1	74	38	36	36	6
4,600	–	–	–	–	29	SD1105A-0460-029-06R1	74	38	36	36	6
4,650	–	–	–	M5	29	SD1105A-0465-029-06R1	74	38	36	36	6
4,700	–	–	–	–	29	SD1105A-0470-029-06R1	74	38	36	36	6
4,763	3/16	–	–	–	35	SD1105A-0476-035-06R1	82	46	36	44	6
4,800	–	–	–	MF5	35	SD1105A-0480-035-06R1	82	46	36	44	6
4,900	–	5H7	–	–	35	SD1105A-0490-035-06R1	82	46	36	44	6
5,000	–	–	M6	–	35	SD1105A-0500-035-06R1	82	46	36	44	6
5,100	–	–	UNC1/4-20	–	35	SD1105A-0510-035-06R1	82	46	36	44	6
5,159	13/64	–	–	–	35	SD1105A-0516-035-06R1	82	46	36	44	6
5,200	–	–	MF6X0,75	–	35	SD1105A-0520-035-06R1	82	46	36	44	6
5,300	–	–	–	–	35	SD1105A-0530-035-06R1	82	46	36	44	6
5,400	–	–	–	–	35	SD1105A-0540-035-06R1	82	46	36	44	6
5,500	–	–	UNF1/4-28	–	35	SD1105A-0550-035-06R1	82	46	36	44	6
5,550	–	–	–	M6	35	SD1105A-0555-035-06R1	82	46	36	44	6
5,556	7/32	–	–	–	35	SD1105A-0556-035-06R1	82	46	36	44	6
5,600	–	–	–	–	35	SD1105A-0560-035-06R1	82	46	36	44	6
5,700	–	–	–	–	35	SD1105A-0570-035-06R1	82	46	36	44	6
5,800	–	6H6	–	–	35	SD1105A-0580-035-06R1	82	46	36	44	6
5,900	–	6H6/6H7	–	–	35	SD1105A-0590-035-06R1	82	46	36	44	6
5,953	15/64	–	–	–	35	SD1105A-0595-035-06R1	82	46	36	44	6

* For further information regarding reaming (see page 317) and threading (see page 249).

Seco Feedmax™ Universal – SD1105A

Drilling depth ~ 5 x D

Cylindrical shank DIN 6537A



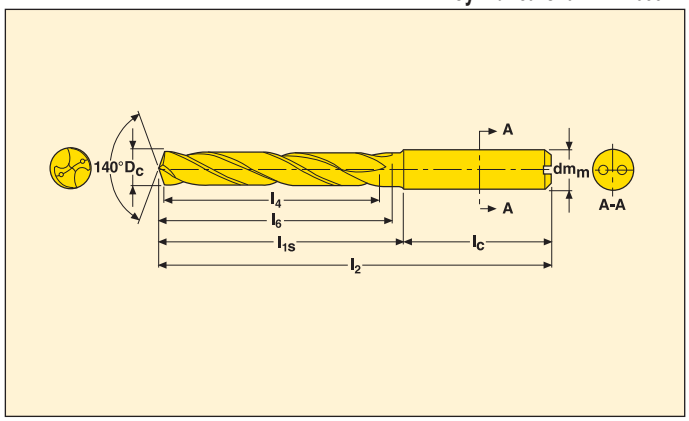

- Internal coolant
- For cutting data see page 120
- Coating: AlCrN
- Hole tolerance: IT8-9

D_c m7 (mm)	D_c m7 (inch)	Reamer size*	Tap thread type	Forming tap	l_4	Part No.	Dimensions in mm				
							l_2	l_{1s}	l_c	l_6	dm_m h6
6,000	–	–	M7	–	35	SD1105A-0600-035-06R1	82	46	36	44	6
6,100	–	–	NPTF1/16	–	43	SD1105A-0610-043-08R1	91	55	36	53	8
6,200	–	–	–	–	43	SD1105A-0620-043-08R1	91	55	36	53	8
6,300	–	–	–	–	43	SD1105A-0630-043-08R1	91	55	36	53	8
6,350	1/4	–	–	–	43	SD1105A-0635-043-08R1	91	55	36	53	8
6,400	–	–	–	–	43	SD1105A-0640-043-08R1	91	55	36	53	8
6,500	–	–	–	–	43	SD1105A-0650-043-08R1	91	55	36	53	8
6,600	–	–	UNC5/16-18	–	43	SD1105A-0660-043-08R1	91	55	36	53	8
6,700	–	–	–	–	43	SD1105A-0670-043-08R1	91	55	36	53	8
6,747	17/64	–	–	–	43	SD1105A-0675-043-08R1	91	55	36	53	8
6,800	–	7H6	M8	–	43	SD1105A-0680-043-08R1	91	55	36	53	8
6,900	–	7H6/7H7	UNF5/16-24	–	43	SD1105A-0690-043-08R1	91	55	36	53	8
7,000	–	–	MF8X1	–	43	SD1105A-0700-043-08R1	91	55	36	53	8
7,100	–	–	–	–	43	SD1105A-0710-043-08R1	91	55	36	53	8
7,144	9/32	–	–	–	43	SD1105A-0714-043-08R1	91	55	36	53	8
7,200	–	–	MF8X0,75	–	43	SD1105A-0720-043-08R1	91	55	36	53	8
7,300	–	–	–	–	43	SD1105A-0730-043-08R1	91	55	36	53	8
7,400	–	–	–	–	43	SD1105A-0740-043-08R1	91	55	36	53	8
7,500	–	–	–	–	43	SD1105A-0750-043-08R1	91	55	36	53	8
7,541	19/64	–	–	–	43	SD1105A-0754-043-08R1	91	55	36	53	8
7,550	–	–	–	MF8	43	SD1105A-0755-043-08R1	91	55	36	53	8
7,600	–	–	–	–	43	SD1105A-0760-043-08R1	91	55	36	53	8
7,700	–	–	–	–	43	SD1105A-0770-043-08R1	91	55	36	53	8
7,800	–	8H6	–	–	43	SD1105A-0780-043-08R1	91	55	36	53	8
7,900	–	8H6/8H7	–	–	43	SD1105A-0790-043-08R1	91	55	36	53	8
7,938	5/16	–	–	–	43	SD1105A-0794-043-08R1	91	55	36	53	8
8,000	–	–	UNC3/8-16	–	43	SD1105A-0800-043-08R1	91	55	36	53	8
8,100	–	–	–	–	49	SD1105A-0810-049-10R1	103	63	40	61	10
8,200	–	–	–	–	49	SD1105A-0820-049-10R1	103	63	40	61	10
8,300	–	–	–	–	49	SD1105A-0830-049-10R1	103	63	40	61	10
8,334	21/64	–	–	–	49	SD1105A-0833-049-10R1	103	63	40	61	10
8,400	–	–	NPT1/8 / NPTF1/8	–	49	SD1105A-0840-049-10R1	103	63	40	61	10
8,500	–	–	M10	–	49	SD1105A-0850-049-10R1	103	63	40	61	10
8,600	–	–	–	–	49	SD1105A-0860-049-10R1	103	63	40	61	10
8,700	–	–	–	–	49	SD1105A-0870-049-10R1	103	63	40	61	10
8,731	11/32	–	–	–	49	SD1105A-0873-049-10R1	103	63	40	61	10
8,800	–	9H6	G1/8 / MF10X1,25	–	49	SD1105A-0880-049-10R1	103	63	40	61	10
8,900	–	9H6/9H7	–	–	49	SD1105A-0890-049-10R1	103	63	40	61	10
9,000	–	–	MF10X1	–	49	SD1105A-0900-049-10R1	103	63	40	61	10
9,100	–	–	–	–	49	SD1105A-0910-049-10R1	103	63	40	61	10
9,128	23/64	–	–	–	49	SD1105A-0913-049-10R1	103	63	40	61	10
9,200	–	–	MF10X0,75	–	49	SD1105A-0920-049-10R1	103	63	40	61	10

* For further information regarding reaming (see page 317) and threading (see page 249).

Seco Feedmax™ Universal – SD1105A

Drilling depth ~ 5 x D

Cylindrical shank DIN 6537A



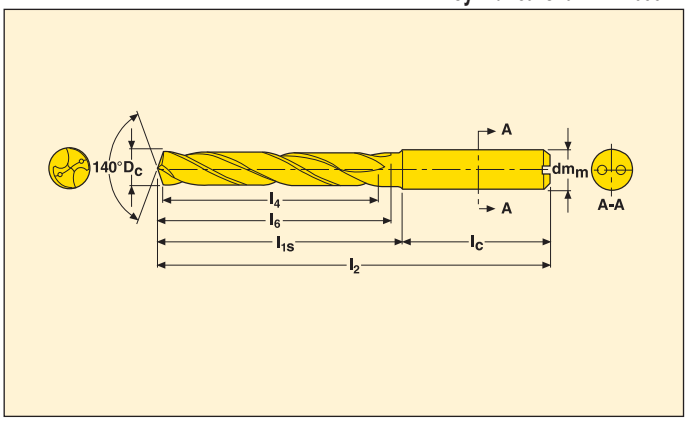

- Internal coolant
- For cutting data see page 120
- Coating: AlCrN
- Hole tolerance: IT8-9

D_c m7 (mm)	D_c m7 (inch)	Reamer size*	Tap thread type	Forming tap	l_4	Part No.	Dimensions in mm				
							l_2	l_{1s}	l_c	l_6	dm_m h6
9,300	–	–	–	–	49	SD1105A-0930-049-10R1	103	63	40	61	10
9,400	–	–	UNC7/16-14	–	49	SD1105A-0940-049-10R1	103	63	40	61	10
9,500	–	–	–	–	49	SD1105A-0950-049-10R1	103	63	40	61	10
9,525	3/8	–	–	–	49	SD1105A-0953-049-10R1	103	63	40	61	10
9,550	–	–	–	MF10	49	SD1105A-0955-049-10R1	103	63	40	61	10
9,600	–	–	–	–	49	SD1105A-0960-049-10R1	103	63	40	61	10
9,700	–	–	–	–	49	SD1105A-0970-049-10R1	103	63	40	61	10
9,800	–	10H6/10H7	–	–	49	SD1105A-0980-049-10R1	103	63	40	61	10
9,900	–	10H6/10H7	UNF7/16-20	–	49	SD1105A-0990-049-10R1	103	63	40	61	10
9,922	25/64	–	–	–	49	SD1105A-0992-049-10R1	103	63	40	61	10
10,000	–	–	–	–	49	SD1105A-1000-049-10R1	103	63	40	61	10
10,100	–	–	–	–	56	SD1105A-1010-056-12R1	118	73	45	71	12
10,200	–	–	M12	–	56	SD1105A-1020-056-12R1	118	73	45	71	12
10,300	–	–	–	–	56	SD1105A-1030-056-12R1	118	73	45	71	12
10,319	13/32	–	–	–	56	SD1105A-1032-056-12R1	118	73	45	71	12
10,400	–	–	–	–	56	SD1105A-1040-056-12R1	118	73	45	71	12
10,500	–	–	MF12X1,5	–	56	SD1105A-1050-056-12R1	118	73	45	71	12
10,600	–	–	–	–	56	SD1105A-1060-056-12R1	118	73	45	71	12
10,700	–	–	–	–	56	SD1105A-1070-056-12R1	118	73	45	71	12
10,716	27/64	–	–	–	56	SD1105A-1072-056-12R1	118	73	45	71	12
10,800	–	11H6/11H7	UNC1/2-13 / MF12X1,25	–	56	SD1105A-1080-056-12R1	118	73	45	71	12
10,900	–	11H6/11H7	–	–	56	SD1105A-1090-056-12R1	118	73	45	71	12
11,000	–	–	MF12X1 / NPTF1/4	–	56	SD1105A-1100-056-12R1	118	73	45	71	12
11,100	–	–	NPT1/4	–	56	SD1105A-1110-056-12R1	118	73	45	71	12
11,113	7/16	–	–	–	56	SD1105A-1111-056-12R1	118	73	45	71	12
11,200	–	–	–	M12	56	SD1105A-1120-056-12R1	118	73	45	71	12
11,300	–	–	–	–	56	SD1105A-1130-056-12R1	118	73	45	71	12
11,400	–	–	–	–	56	SD1105A-1140-056-12R1	118	73	45	71	12
11,500	–	–	UNF1/2-20	–	56	SD1105A-1150-056-12R1	118	73	45	71	12
11,509	29/64	–	–	–	56	SD1105A-1151-056-12R1	118	73	45	71	12
11,550	–	–	–	MF12	56	SD1105A-1155-056-12R1	118	73	45	71	12
11,600	–	–	–	–	56	SD1105A-1160-056-12R1	118	73	45	71	12
11,700	–	–	–	–	56	SD1105A-1170-056-12R1	118	73	45	71	12
11,800	–	12H6/12H7	G1/4	–	56	SD1105A-1180-056-12R1	118	73	45	71	12
11,900	–	12H6/12H7	–	–	56	SD1105A-1190-056-12R1	118	73	45	71	12
11,906	15/32	–	–	–	56	SD1105A-1191-056-12R1	118	73	45	71	12
12,000	–	–	M14	–	56	SD1105A-1200-056-12R1	118	73	45	71	12
12,100	–	–	–	–	60	SD1105A-1210-060-14R1	124	79	45	77	14
12,200	–	–	–	–	60	SD1105A-1220-060-14R1	124	79	45	77	14
12,250	–	–	–	–	60	SD1105A-1225-060-14R1	124	79	45	77	14
12,303	31/64	–	–	–	60	SD1105A-1230-060-14R1	124	79	45	77	14
12,400	–	–	–	–	60	SD1105A-1240-060-14R1	124	79	45	77	14

* For further information regarding reaming (see page 317) and threading (see page 249).

Seco Feedmax™ Universal – SD1105A

Drilling depth ~ 5 x D

Cylindrical shank DIN 6537A



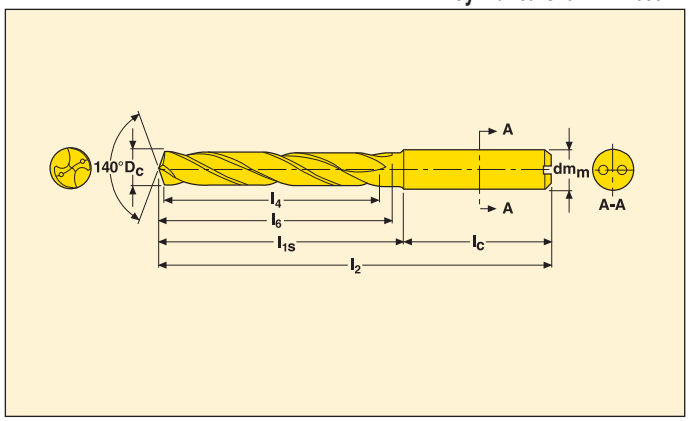

- Internal coolant
- For cutting data see page 120
- Coating: AlCrN
- Hole tolerance: IT8-9

D_c m7 (mm)	D_c m7 (inch)	Reamer size*	Tap thread type	Forming tap	l_4	Part No.	Dimensions in mm				
							l_2	l_{1s}	l_c	l_6	dm_m h6
12,500	–	–	MF14X1,5	–	60	**SD1105A-1250-060-14R1**	124	79	45	77	14
12,600	–	–	–	–	60	**SD1105A-1260-060-14R1**	124	79	45	77	14
12,700	1/2	–	–	–	60	**SD1105A-1270-060-14R1**	124	79	45	77	14
12,750	–	–	–	–	60	**SD1105A-1275-060-14R1**	124	79	45	77	14
12,800	–	13H6/13H7	MF14X1,25	–	60	**SD1105A-1280-060-14R1**	124	79	45	77	14
12,900	–	13H6/13H7	–	–	60	**SD1105A-1290-060-14R1**	124	79	45	77	14
13,000	–	–	MF14X1	–	60	**SD1105A-1300-060-14R1**	124	79	45	77	14
13,100	–	–	–	M14	60	**SD1105A-1310-060-14R1**	124	79	45	77	14
13,200	–	–	–	–	60	**SD1105A-1320-060-14R1**	124	79	45	77	14
13,300	–	–	–	–	60	**SD1105A-1330-060-14R1**	124	79	45	77	14
13,400	–	–	–	–	60	**SD1105A-1340-060-14R1**	124	79	45	77	14
13,494	17/32	–	–	–	60	**SD1105A-1349-060-14R1**	124	79	45	77	14
13,500	–	–	–	–	60	**SD1105A-1350-060-14R1**	124	79	45	77	14
13,600	–	–	–	–	60	**SD1105A-1360-060-14R1**	124	79	45	77	14
13,700	–	–	–	–	60	**SD1105A-1370-060-14R1**	124	79	45	77	14
13,800	–	14H6/14H7	–	–	60	**SD1105A-1380-060-14R1**	124	79	45	77	14
13,900	–	14H6/14H7	–	–	60	**SD1105A-1390-060-14R1**	124	79	45	77	14
14,000	–	–	M16	–	60	**SD1105A-1400-060-14R1**	124	79	45	77	14
14,100	–	–	–	–	63	**SD1105A-1410-063-16R1**	133	85	48	83	16
14,200	–	–	–	–	63	**SD1105A-1420-063-16R1**	133	85	48	83	16
14,288	9/16	–	–	–	63	**SD1105A-1429-063-16R1**	133	85	48	83	16
14,300	–	–	NPT3/8 / NPTF3/8	–	63	**SD1105A-1430-063-16R1**	133	85	48	83	16
14,400	–	–	–	–	63	**SD1105A-1440-063-16R1**	133	85	48	83	16
14,500	–	–	MF16X1,5 / UNF5/8-18	–	63	**SD1105A-1450-063-16R1**	133	85	48	83	16
14,600	–	–	–	–	63	**SD1105A-1460-063-16R1**	133	85	48	83	16
14,700	–	–	–	–	63	**SD1105A-1470-063-16R1**	133	85	48	83	16
14,750	–	–	–	–	63	**SD1105A-1475-063-16R1**	133	85	48	83	16
14,800	–	15H6/15H7	–	–	63	**SD1105A-1480-063-16R1**	133	85	48	83	16
14,900	–	15H6/15H7	–	–	63	**SD1105A-1490-063-16R1**	133	85	48	83	16
15,000	–	–	MF16X1	–	63	**SD1105A-1500-063-16R1**	133	85	48	83	16
15,100	–	–	–	M16	63	**SD1105A-1510-063-16R1**	133	85	48	83	16
15,200	–	–	–	–	63	**SD1105A-1520-063-16R1**	133	85	48	83	16
15,300	–	–	–	–	63	**SD1105A-1530-063-16R1**	133	85	48	83	16
15,400	–	–	–	–	63	**SD1105A-1540-063-16R1**	133	85	48	83	16
15,500	–	–	M18	–	63	**SD1105A-1550-063-16R1**	133	85	48	83	16
15,600	–	–	–	–	63	**SD1105A-1560-063-16R1**	133	85	48	83	16
15,700	–	–	–	–	63	**SD1105A-1570-063-16R1**	133	85	48	83	16
15,800	–	16H6/16H7	–	–	63	**SD1105A-1580-063-16R1**	133	85	48	83	16
15,875	5/8	16H6/16H7	–	–	63	**SD1105A-1588-063-16R1**	133	85	48	83	16
15,900	–	16H6/16H7	–	–	63	**SD1105A-1590-063-16R1**	133	85	48	83	16
16,000	–	–	–	–	63	**SD1105A-1600-063-16R1**	133	85	48	83	16
16,100	–	–	–	–	71	**SD1105A-1610-071-18R1**	143	95	48	93	18

* For further information regarding reaming (see page 317) and threading (see page 249).

Seco Feedmax™ Universal – SD1105A

Drilling depth ~ 5 x D

Cylindrical shank DIN 6537A



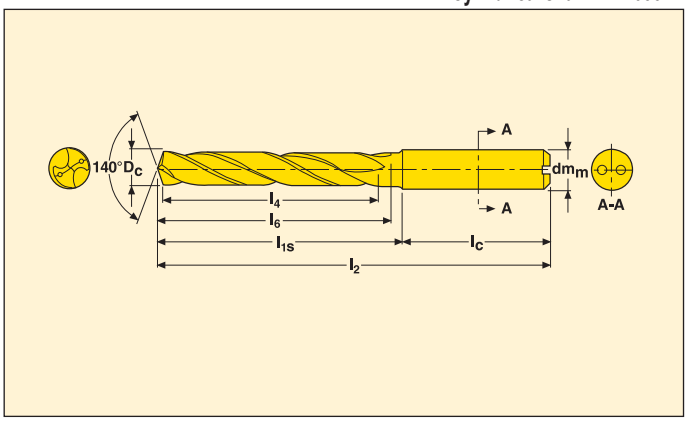

- Internal coolant
- For cutting data see page 120
- Coating: AlCrN
- Hole tolerance: IT8-9

D_c m7 (mm)	D_c m7 (inch)	Reamer size*	Tap thread type	Forming tap	l_4	Part No.	Dimensions in mm				
							l_2	l_{1s}	l_c	l_6	dm_m h6
16,200	–	–	–	–	71	SD1105A-1620-071-18R1	143	95	48	93	18
16,300	–	–	–	–	71	SD1105A-1630-071-18R1	143	95	48	93	18
16,400	–	–	–	–	71	SD1105A-1640-071-18R1	143	95	48	93	18
16,500	–	–	MF18X1,5	–	71	SD1105A-1650-071-18R1	143	95	48	93	18
16,600	–	–	–	–	71	SD1105A-1660-071-18R1	143	95	48	93	18
16,700	–	–	–	–	71	SD1105A-1670-071-18R1	143	95	48	93	18
16,750	–	–	–	–	71	SD1105A-1675-071-18R1	143	95	48	93	18
16,800	–	17H6/17H7	–	–	71	SD1105A-1680-071-18R1	143	95	48	93	18
16,900	–	17H6/17H7	–	–	71	SD1105A-1690-071-18R1	143	95	48	93	18
17,000	–	–	MF18X1	–	71	SD1105A-1700-071-18R1	143	95	48	93	18
17,100	–	–	–	–	71	SD1105A-1710-071-18R1	143	95	48	93	18
17,200	–	–	–	–	71	SD1105A-1720-071-18R1	143	95	48	93	18
17,300	–	–	–	–	71	SD1105A-1730-071-18R1	143	95	48	93	18
17,400	–	–	–	–	71	SD1105A-1740-071-18R1	143	95	48	93	18
17,500	–	–	M20	–	71	SD1105A-1750-071-18R1	143	95	48	93	18
17,600	–	–	NPTF1/2	–	71	SD1105A-1760-071-18R1	143	95	48	93	18
17,700	–	–	–	–	71	SD1105A-1770-071-18R1	143	95	48	93	18
17,800	–	18H6/18H7	–	–	71	SD1105A-1780-071-18R1	143	95	48	93	18
17,900	–	18H6/18H7	NPT1/2	–	71	SD1105A-1790-071-18R1	143	95	48	93	18
18,000	–	–	–	–	71	SD1105A-1800-071-18R1	143	95	48	93	18
18,100	–	–	–	–	77	SD1105A-1810-077-20R1	153	103	50	101	20
18,200	–	–	–	–	77	SD1105A-1820-077-20R1	153	103	50	101	20
18,300	–	–	–	–	77	SD1105A-1830-077-20R1	153	103	50	101	20
18,400	–	–	–	–	77	SD1105A-1840-077-20R1	153	103	50	101	20
18,500	–	–	MF20X1,5	–	77	SD1105A-1850-077-20R1	153	103	50	101	20
18,600	–	–	–	–	77	SD1105A-1860-077-20R1	153	103	50	101	20
18,700	–	–	–	–	77	SD1105A-1870-077-20R1	153	103	50	101	20
18,800	–	19H6/19H7	–	–	77	SD1105A-1880-077-20R1	153	103	50	101	20
18,900	–	19H6/19H7	–	M20	77	SD1105A-1890-077-20R1	153	103	50	101	20
19,000	–	–	G1/2 / MF20X1	–	77	SD1105A-1900-077-20R1	153	103	50	101	20
19,050	3/4	–	–	–	77	SD1105A-1905-077-20R1	153	103	50	101	20
19,100	–	–	–	–	77	SD1105A-1910-077-20R1	153	103	50	101	20
19,200	–	–	–	–	77	SD1105A-1920-077-20R1	153	103	50	101	20
19,300	–	–	–	–	77	SD1105A-1930-077-20R1	153	103	50	101	20
19,400	–	–	–	–	77	SD1105A-1940-077-20R1	153	103	50	101	20
19,500	–	–	M22	–	77	SD1105A-1950-077-20R1	153	103	50	101	20
19,600	–	–	–	–	77	SD1105A-1960-077-20R1	153	103	50	101	20
19,700	–	–	–	–	77	SD1105A-1970-077-20R1	153	103	50	101	20
19,800	–	20H6/20H7	–	–	77	SD1105A-1980-077-20R1	153	103	50	101	20
19,900	–	20H6/20H7	–	–	77	SD1105A-1990-077-20R1	153	103	50	101	20
20,000	–	–	–	–	77	SD1105A-2000-077-20R1	153	103	50	101	20

* For further information regarding reaming (see page 317) and threading (see page 249).

Seco Feedmax™ – SD203

Drilling depth ~ 3 x D

Cylindrical shank DIN 6537A



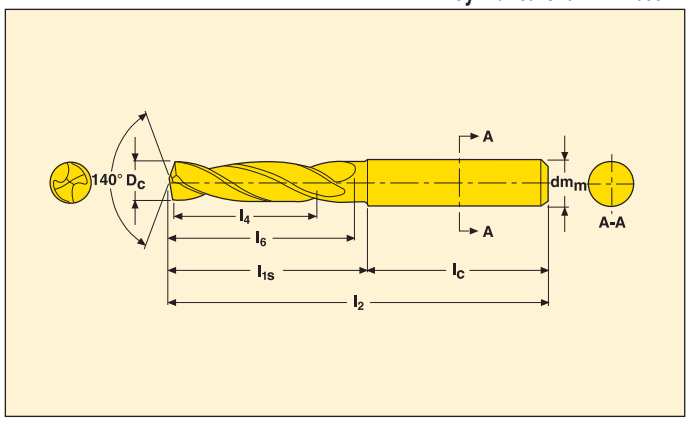

- External coolant
- For cutting and machining data see page 121
- Coating: TiAlN + TiN
- Hole tolerance: IT 8-9

D_c m7 (mm)	D_c m7 (inch)	Reamer size*	Tap thread type	Forming tap	l_4	Part No.	Dimensions in mm				
							l_2	l_{1s}	l_c	l_6	dm_m h6
2,0	–	–	–	–	7	SD203-2.0-7-4R1	41	13	28	11	4
2,1	–	–	–	–	7	SD203-2.1-7-4R1	41	13	28	11	4
2,2	–	–	–	–	7	SD203-2.2-7-4R1	41	13	28	11	4
2,3	–	–	–	–	8	SD203-2.3-8-4R1	44	16	28	13	4
2,38	3/32	–	–	–	8	SD203-00937-031-0157R1	44	16	28	13	4
2,4	–	–	–	–	8	SD203-2.4-8-4R1	44	16	28	13	4
2,5	–	–	–	–	8	SD203-2.5-8-4R1	44	16	28	13	4
2,6	–	–	–	–	8	SD203-2.6-8-4R1	44	16	28	13	4
2,7	–	–	–	–	9	SD203-2.7-9-4R1	44	16	28	15	4
2,78	7/64	–	–	–	9	SD203-01095-035-0157R1	44	16	28	15	4
2,8	–	–	–	–	9	SD203-2.8-9-4R1	44	16	28	15	4
2,9	–	–	–	–	9	SD203-2.9-9-4R1	44	16	28	15	4
3,0	–	–	–	–	14	SD203-3.0-14-6R1	62	26	36	20	6
3,1	–	–	–	–	14	SD203-3.1-14-6R1	62	26	36	20	6
3,175	1/8	–	–	–	14	SD203-01250-055-0236R1	62	26	36	20	6
3,2	–	–	–	–	14	SD203-3.2-14-6R1	62	26	36	20	6
3,3	–	–	M4	–	14	SD203-3.3-14-6R1	62	26	36	20	6
3,4	–	–	–	–	14	SD203-3.4-14-6R1	62	26	36	20	6
3,5	–	–	UNC8-32/MF4X0,5/UNF8-36	–	15	SD203-3.5-15-6R1	62	26	36	20	6
3,571	9/64	–	–	–	15	SD203-01406-059-0236R1	62	26	36	20	6
3,6	–	–	–	–	15	SD203-3.6-15-6R1	62	26	36	20	6
3,7	–	–	M4,5	M4	15	SD203-3.7-15-6R1	62	26	36	20	6
3,8	–	–	–	–	17	SD203-3.8-17-6R1	66	30	36	24	6
3,9	–	4 H7	UNC10-24	–	17	SD203-3.9-17-6R1	66	30	36	24	6
3,97	5/32	–	–	–	17	SD203-01563-067-0236R1	66	30	36	24	6
4,0	–	–	–	–	17	SD203-4.0-17-6R1	66	30	36	24	6
4,1	–	–	UNF10-32	–	17	SD203-4.1-17-6R1	66	30	36	24	6
4,2	–	–	M5	–	17	SD203-4.2-17-6R1	66	30	36	24	6
4,3	–	–	–	–	18	SD203-4.3-18-6R1	66	30	36	24	6
4,366	11/64	–	–	–	18	SD203-01719-071-0236R1	66	30	36	24	6
4,4	–	–	UNC12-24/MF5X0,5	–	18	SD203-4.4-18-6R1	66	30	36	24	6
4,5	–	–	–	–	18	SD203-4.5-18-6R1	66	30	36	24	6
4,6	–	–	–	M5	18	SD203-4.6-18-6R1	66	30	36	26	6
4,7	–	–	–	–	18	SD203-4.7-18-6R1	66	30	36	26	6
4,763	3/16	–	–	–	20	SD203-01875-079-0236R1	66	30	36	26	6
4,8	–	–	–	–	20	SD203-4.8-20-6R1	66	30	36	28	6
4,9	–	5 H7	M6	–	20	SD203-4.9-20-6R1	66	30	36	28	6
5,0	–	–	UNC1/4-20	–	20	SD203-5.0-20-6R1	66	30	36	28	6
5,1	–	–	–	–	20	SD203-5.1-20-6R1	66	30	36	28	6
5,159	13/64	–	–	–	20	SD203-02031-079-0236R1	66	30	36	28	6
5,2	–	–	–	–	20	SD203-5.2-20-6R1	66	30	36	28	6
5,5	–	–	–	M6	21	SD203-5.5-21-6R1	66	30	36	28	6

* For further information regarding reaming (see page 317) and threading (see page 249).
For intermediate diameters see the Custom Design software.

Seco Feedmax™ – SD203

Drilling depth ~ 3 x D

Cylindrical shank DIN 6537A



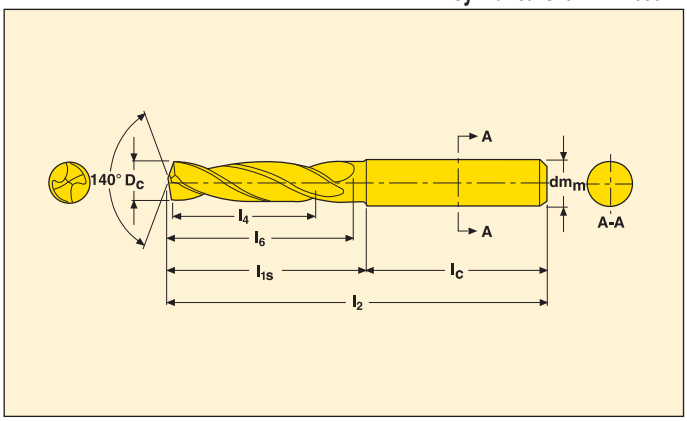

- External coolant
- For cutting and machining data see page 121
- Coating: TiAlN + TiN
- Hole tolerance: IT 8-9

D_c m7 (mm)	D_c m7 (inch)	Reamer size*	Tap thread type	Forming tap	l_4	Part No.	Dimensions in mm				
							l_2	l_{1s}	l_c	l_6	dm_m h6
5,558	7/32	–	–	–	21	SD203-02188-083-0236R1	66	30	36	28	6
5,8	–	6 H6	–	–	21	SD203-5.8-21-6R1	66	30	36	28	6
5,9	–	6 H6/6 H7	–	–	21	SD203-5.9-21-6R1	66	30	36	28	6
5,954	15/64	–	–	–	21	SD203-02344-083-0236R1	66	30	36	28	6
6,0	–	–	NPTF1/16	–	21	SD203-6.0-21-6R1	66	30	36	28	6
6,35	1/4	–	–	–	23	SD203-02500-091-0315R1	79	43	36	34	8
6,5	–	–	UNC5/16-18	–	23	SD203-6.5-23-8R1	79	43	36	34	8
6,6	–	–	–	–	23	SD203-6.6-23-8R1	79	43	36	34	8
6,746	17/64	–	–	–	25	SD203-02656-098-0315R1	79	43	36	34	8
6,8	–	7 H6	M8	–	25	SD203-6.8-25-8R1	79	43	36	34	8
6,9	–	7 H6/7 H7	UNF5/16-24	–	25	SD203-6.9-25-8R1	79	43	36	34	8
7,0	–	–	MF8X1	–	25	SD203-7.0-25-8R1	79	43	36	34	8
7,145	9/32	–	–	–	25	SD203-02813-098-0315R1	79	43	36	41	8
7,5	–	–	–	–	25	SD203-7.5-25-8R1	79	43	36	41	8
7,541	19/64	–	–	–	27	SD203-02969-106-0315R1	79	43	36	41	8
7,8	–	8 H6	–	–	27	SD203-7.8-27-8R1	79	43	36	41	8
7,9	–	8 H6/8 H7	–	–	27	SD203-7.9-27-8R1	79	43	36	41	8
7,938	5/16	–	–	–	27	SD203-03125-106-0315R1	79	43	36	41	8
8,0	–	–	UNC3/8-16	–	27	SD203-8.0-27-8R1	79	43	36	41	8
8,2	–	–	–	–	27	SD203-8.2-27-10R1	89	49	40	47	10
8,334	21/64	–	–	–	27	SD203-03281-106-0394R1	89	49	40	47	10
8,5	–	–	M10	–	27	SD203-8.5-27-10R1	89	49	40	47	10
8,7	–	–	–	–	29	SD203-8.7-27-10R1	89	49	40	47	10
8,733	11/32	–	–	–	29	SD203-03438-114-0394R1	89	49	40	47	10
8,8	–	9 H6	G1/8/MF10X1,25	–	29	SD203-8.8-29-10R1	89	49	40	47	10
8,9	–	9 H6/9 H7	–	–	29	SD203-8.9-29-10R1	89	49	40	47	10
9,0	–	–	MF10X1	–	29	SD203-9.0-29-10R1	89	49	40	47	10
9,129	23/64	–	–	–	29	SD203-03594-114-0394R1	89	49	40	47	10
9,5	–	–	–	–	29	SD203-9.5-29-10R1	89	49	40	47	10
9,525	3/8	–	–	–	31	SD203-03750-122-0394R1	89	49	40	47	10
9,8	–	10 H6/10 H7	–	–	31	SD203-9.8-31-10R1	89	49	40	47	10
9,9	–	10 H6/10 H7	UNF7/16-20	–	31	SD203-9.9-31-10R1	89	49	40	47	10
9,921	25/64	–	–	–	31	SD203-03906-122-0394R1	89	49	40	47	10
10,0	–	–	–	–	31	SD203-10.0-31-10R1	89	49	40	47	10
10,2	–	–	M12	–	31	SD203-10.2-31-12R1	102	57	45	55	12
10,32	13/32	–	–	–	31	SD203-04063-122-0472R1	102	57	45	55	12
10,4	–	–	–	–	31	SD203-10.4-31-12R1	102	57	45	55	12
10,5	–	–	MF12X1,5	–	31	SD203-10.5-31-12R1	102	57	45	55	12
10,716	27/64	–	–	–	33	SD203-04219-130-0472R1	102	57	45	55	12
10,8	–	11 H6/11 H7	UNC1/2-13/MF12X1,25	–	33	SD203-10.8-33-12R1	102	57	45	55	12
11,0	–	–	MF12X1/NPTF1/4	–	33	SD203-11.0-33-12R1	102	57	45	55	12
11,113	7/16	–	–	–	33	SD203-04375-130-0472R1	102	57	45	55	12

* For further information regarding reaming (see page 317) and threading (see page 249).
For intermediate diameters see the Custom Design software.

Seco Feedmax™ – SD203

Drilling depth ~ 3 x D

Cylindrical shank DIN 6537A



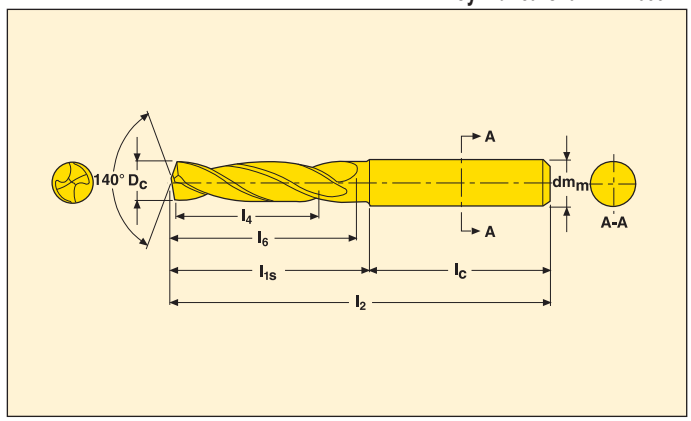

- External coolant
- For cutting and machining data see page 121
- Coating: TiAlN + TiN
- Hole tolerance: IT 8-9

D_c m7 (mm)	D_c m7 (inch)	Reamer size*	Tap thread type	Forming tap	l_4	Part No.	Dimensions in mm				
							l_2	l_{1s}	l_c	l_6	dm_m h6
11,5	–	–	UNF1/2-20	–	33	SD203-11.5-33-12R1	102	57	45	55	12
11,509	29/64	–	–	–	33	SD203-04531-130-0472R1	102	57	45	55	12
11,8	–	12 H6/12 H7	G1/4	–	33	SD203-11.8-33-12R1	102	57	45	55	12
11,908	15/32	12 H6/12 H7	–	–	36	SD203-04688-142-0472R1	102	57	45	55	12
12,0	–	–	M14	–	36	SD203-12.0-36-12R1	102	57	45	55	12
12,25	–	–	–	–	36	SD203-12.25-36-14R1	107	62	45	60	14
12,3	–	–	–	–	36	SD203-12.3-36-14R1	107	62	45	60	14
12,304	31/64	–	–	–	36	SD203-04844-142-0551R1	107	62	45	60	14
12,5	–	–	MF14X1,5	–	36	SD203-12.5-36-14R1	107	62	45	60	14
12,7	1/2	–	–	–	36	SD203-05000-142-0551R1	107	62	45	60	14
12,8	–	13 H6/13 H7	MF14X1,25	–	36	SD203-12.8-36-14R1	107	62	45	60	14
13,0	–	–	MF14X1	–	36	SD203-13.0-36-14R1	107	62	45	60	14
13,096	33/64	–	–	–	37	SD203-05156-146-0551R1	107	62	45	60	14
13,492	17/32	–	–	–	37	SD203-05312-146-0551R1	107	62	45	60	14
13,5	–	–	–	–	37	SD203-13.5-37-14R1	107	62	45	60	14
13,8	–	14 H6/14 H7	–	–	37	SD203-13.8-37-14R1	107	62	45	60	14
13,891	35/64	14 H6/14 H7	–	–	37	SD203-05469-146-0551R1	107	62	45	60	14
14,0	–	–	–	–	37	SD203-14.0-37-14R1	107	62	45	60	14
14,2	–	–	–	–	38	SD203-14.2-38-16R1	115	67	48	65	16
14,288	9/16	–	–	–	38	SD203-05625-149-0630R1	115	67	48	65	16
14,5	–	–	MF16X1,5/UNF5/8-18	–	38	SD203-14.5-38-16R1	115	67	48	65	16
14,8	–	15 H6/15 H7	–	–	38	SD203-14.8-38-16R1	115	67	48	65	16
15,0	–	–	MF16X1	–	38	SD203-15.0-38-16R1	115	67	48	65	16
15,25	–	–	–	–	39	SD203-15.25-39-16R1	115	67	48	65	16
15,5	–	–	M18	–	39	SD203-15.5-39-16R1	115	67	48	65	16
15,8	–	16 H6/16 H7	–	–	39	SD203-15.8-39-16R1	115	67	48	65	16
16,0	–	–	–	–	39	SD203-16.0-39-16R1	115	67	48	65	16
16,5	–	–	MF18X1,5	–	40	SD203-16.5-40-18R1	123	75	48	73	18
16,8	–	17 H6/17 H7	–	–	40	SD203-16.8-40-18R1	123	75	48	73	18
17,0	–	–	MF18X1	–	40	SD203-17.0-40-18R1	123	75	48	73	18
17,5	–	–	M20	–	41	SD203-17.5-41-18R1	123	75	48	73	18
17,8	–	18 H6/18 H7	–	–	41	SD203-17.8-41-18R1	123	75	48	73	18
18,0	–	–	–	–	41	SD203-18.0-41-18R1	123	75	48	73	18
18,5	–	–	MF20X1,5	–	49	SD203-18.5-49-20R1	131	81	50	79	20
18,8	–	19 H6/19 H7	–	–	49	SD203-18.8-49-20R1	131	81	50	79	20
19,0	–	–	G1/2/MF20X1	–	49	SD203-19.0-49-20R1	131	81	50	79	20
19,5	–	–	M22	–	49	SD203-19.5-49-20R1	131	81	50	79	20
19,8	–	20 H6/20 H7	–	–	49	SD203-19.8-49-20R1	131	81	50	79	20
20,0	–	–	–	–	49	SD203-20.0-49-20R1	131	81	50	79	20

* For further information regarding reaming (see page 317) and threading (see page 249).
For intermediate diameters see the Custom Design software.

Intermediate diameters – drilling depth ~ 3 x D

Cylindrical shank DIN 6537A



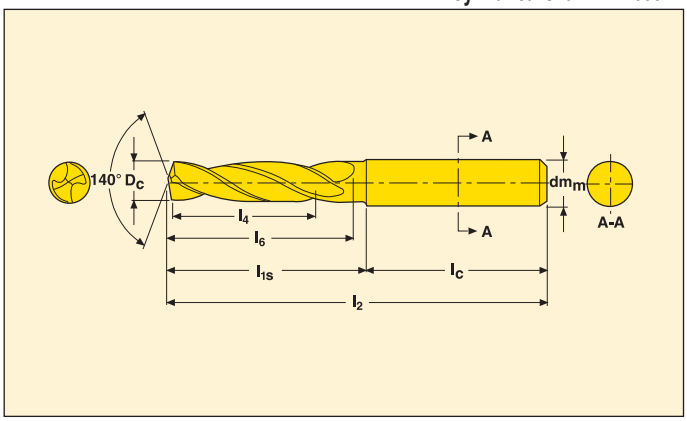

- External coolant
- For cutting and machining data see page 121
- Coating: TiAlN + TiN
- Hole tolerance: IT 8-9

D_c	l_4	Part No.	Dimensions in mm				
			l_2	l_{1s}	l_c	l_6	dm_m h6
2,00-2,20	7	SD203-x.xx-7-4R1	41	13	28	11	4
2,21-2,60	8	SD203-x.xx-8-4R1	44	16	28	13	4
2,61-2,99	9	SD203-x.xx-9-4R1	44	16	28	15	4
3,00-3,40	14	SD203-x.xx-14-6R1	62	26	36	20	6
3,41-3,75	15	SD203-x.xx-15-6R1	62	26	36	20	6
3,76-4,20	17	SD203-x.xx-17-6R1	66	30	36	24	6
4,21-4,50	18	SD203-x.xx-18-6R1	66	30	36	24	6
4,51-4,75	18	SD203-x.xx-18-6R1	66	30	36	26	6
4,76-5,20	20	SD203-x.xx-20-6R1	66	30	36	28	6
5,21-6,00	21	SD203-x.xx-21-6R1	66	30	36	28	6
6,01-6,60	23	SD203-x.xx-23-8R1	79	43	36	34	8
6,61-7,00	25	SD203-x.xx-25-8R1	79	43	36	34	8
7,01-7,50	25	SD203-x.xx-25-8R1	79	43	36	41	8
7,51-8,00	27	SD203-x.xx-27-8R1	79	43	36	41	8
8,01-8,60	27	SD203-x.xx-27-10R1	89	49	40	47	10
8,61-9,50	29	SD203-x.xx-29-10R1	89	49	40	47	10
9,51-10,00	31	SD203-x.xx-31-10R1	89	49	40	47	10
10,01-10,50	31	SD203-xx.xx-31-12R1	102	57	45	55	12
10,51-11,80	33	SD203-xx.xx-33-12R1	102	57	45	55	12
11,81-12,00	36	SD203-xx.xx-36-12R1	102	57	45	55	12
12,01-13,00	36	SD203-xx.xx-36-14R1	107	62	45	60	14
13,01-14,00	37	SD203-xx.xx-37-14R1	107	62	45	60	14
14,01-15,00	38	SD203-xx.xx-38-16R1	115	67	48	65	16
15,01-16,00	39	SD203-xx.xx-39-16R1	115	67	48	65	16
16,01-17,00	40	SD203-xx.xx-40-18R1	123	75	48	73	18
17,01-18,00	41	SD203-xx.xx-41-18R1	123	75	48	73	18
18,01-20,00	49	SD203-xx.xx-49-20R1	131	81	50	79	20

The drills are available in ∅ increments of 0,01 mm. Fill in required cutting ∅ instead of -xx.xx- according to the ordering example.
Cutting ∅ tolerance is equal to m7 unless otherwise specified. Ordering example for ∅ 11,3 mm: SD203-11.3-33-12R1.
Also available for intermediate diameters in the Custom Design software.

Seco Feedmax™ – SD203

Drilling depth ~ 3 x D

Whistle Notch shank DIN 6537B



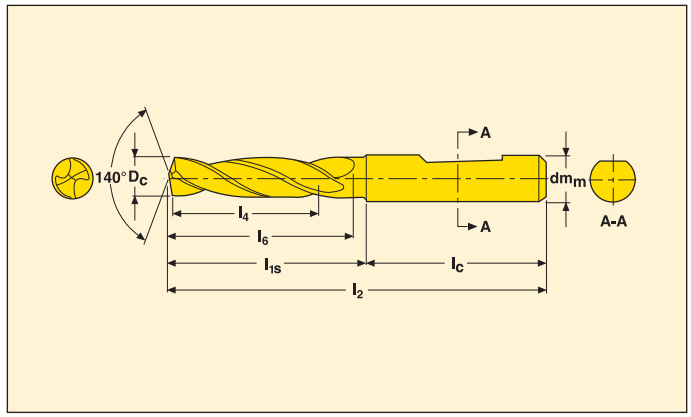

- External coolant
- For cutting and machining data see pages 121
- Coating: TiAlN + TiN
- Hole tolerance: IT 8-9

D_c m7 (mm)	D_c m7 (inch)	Reamer size*	Tap thread type	Forming tap	l_4	Part No.	Dimensions in mm				
							l_2	l_{1s}	l_c	l_6	dm_m h6
3,0	–	–	–	–	14	**SD203-3.0-14-6R5**	62	26	36	20	6
3,1	–	–	–	–	14	**SD203-3.1-14-6R5**	62	26	36	20	6
3,2	–	–	–	–	14	**SD203-3.2-14-6R5**	62	26	36	20	6
3,3	–	–	M4	–	14	**SD203-3.3-14-6R5**	62	26	36	20	6
3,4	–	–	–	–	14	**SD203-3.4-14-6R5**	62	26	36	20	6
3,5	–	–	UNC8-32/MF4X0,5/UNF8-36	–	15	**SD203-3.5-15-6R5**	62	26	36	20	6
3,6	–	–	–	–	15	**SD203-3.6-15-6R5**	62	26	36	20	6
3,7	–	–	M4,5	M4	15	**SD203-3.7-15-6R5**	62	26	36	20	6
3,8	–	4 H6/4 H7	–	–	17	**SD203-3.8-17-6R5**	66	30	36	24	6
3,9	–	4 H6/4 H7	UNC10-24	–	17	**SD203-3.9-17-6R5**	66	30	36	24	6
4,0	–	–	–	–	17	**SD203-4.0-17-6R5**	66	30	36	24	6
4,1	–	–	UNF10-32	–	17	**SD203-4.1-17-6R5**	66	30	36	24	6
4,2	–	–	M5	–	17	**SD203-4.2-17-6R5**	66	30	36	24	6
4,3	–	–	–	–	18	**SD203-4.3-18-6R5**	66	30	36	24	6
4,4	–	–	UNC12-24/MF5X0,5	–	18	**SD203-4.4-18-6R5**	66	30	36	24	6
4,5	–	–	–	–	18	**SD203-4.5-18-6R5**	66	30	36	24	6
4,6	–	–	–	M5	18	**SD203-4.6-18-6R5**	66	30	36	26	6
4,7	–	–	–	–	18	**SD203-4.7-18-6R5**	66	30	36	26	6
4,8	–	5 H6/5 H7	–	–	20	**SD203-4.8-20-6R5**	66	30	36	28	6
4,9	–	5 H6/5 H7	M6	–	20	**SD203-4.9-20-6R5**	66	30	36	28	6
5,0	–	–	UNC1,4-20	–	20	**SD203-5.0-20-6R5**	66	30	36	28	6
5,1	–	–	–	–	20	**SD203-5.1-20-6R5**	66	30	36	28	6
5,2	–	–	–	–	20	**SD203-5.2-20-6R5**	66	30	36	28	6
5,5	–	–	–	M6	21	**SD203-5.5-21-6R5**	66	30	36	28	6
5,8	–	6 H6/6 H7	–	–	21	**SD203-5.8-21-6R5**	66	30	36	28	6
6,0	–	–	NPTF1/16	–	21	**SD203-6.0-21-6R5**	66	30	36	28	6
6,5	–	–	UNC5/16-18	–	23	**SD203-6.5-23-8R5**	79	43	36	34	8
6,6	–	–	–	–	23	**SD203-6.6-23-8R5**	79	43	36	34	8
6,8	–	7 H6/7 H7	M8	–	25	**SD203-6.8-25-8R5**	79	43	36	34	8
6,9	–	7 H6/7 H7	UNF5/16-24	–	25	**SD203-6.9-25-8R5**	79	43	36	34	8
7,0	–	–	MF8X1	–	25	**SD203-7.0-25-8R5**	79	43	36	34	8
7,5	–	–	–	–	25	**SD203-7.5-25-8R5**	79	43	36	41	8
7,8	–	8 H6/8 H7	–	–	27	**SD203-7.8-27-8R5**	79	43	36	41	8
8,0	–	–	UNC3/8-16	–	27	**SD203-8.0-27-8R5**	79	43	36	41	8
8,5	–	–	M10	–	27	**SD203-8.5-27-10R5**	89	49	40	47	10
8,8	–	9 H6/9 H7	G1/8/MF10X1,25	–	29	**SD203-8.8-29-10R5**	89	49	40	47	10
9,0	–	–	MF10X1	–	29	**SD203-9.0-29-10R5**	89	49	40	47	10
9,5	–	–	–	–	29	**SD203-9.5-29-10R5**	89	49	40	47	10
9,8	–	10 H6/10 H7	–	–	31	**SD203-9.8-31-10R5**	89	49	40	47	10
10,0	–	–	–	–	31	**SD203-10.0-31-10R5**	89	49	40	47	10
10,2	–	–	M12	–	31	**SD203-10.2-31-12R5**	102	57	45	55	12
10,5	–	–	MF12X1,5	–	31	**SD203-10.5-31-12R5**	102	57	45	55	12

* For further information regarding reaming (see page 317) and threading (see page 249).
For intermediate diameters see the Custom Design software.

Seco Feedmax™ – SD203

Drilling depth ~ 3 x D

Whistle Notch shank DIN 6537B



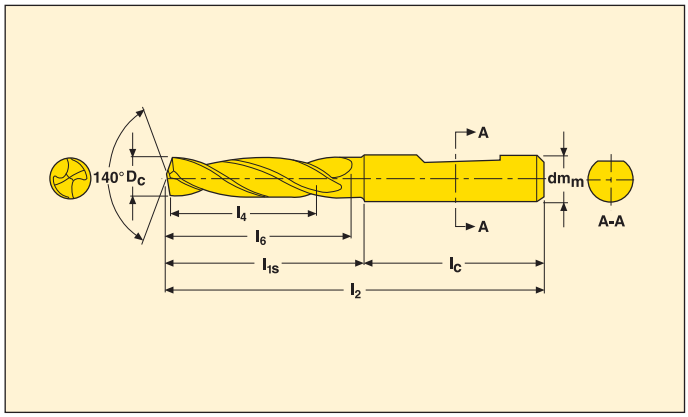

- External coolant
- For cutting and machining data see pages 121
- Coating: TiAlN + TiN
- Hole tolerance: IT 8-9

D_c m7 (mm)	D_c m7 (inch)	Reamer size*	Tap thread type	Forming tap	l_4	Part No.	Dimensions in mm				
							l_2	l_{1s}	l_c	l_6	dm_m h6
10,8	–	11 H6/11 H7	UNC1/2-13/MF12X1,25	–	33	**SD203-10.8-33-12R5**	102	57	45	55	12
11,0	–	–	MF12X1/NPTF1/4	–	33	**SD203-11.0-33-12R5**	102	57	45	55	12
11,5	–	–	UNF1/2-20	–	33	**SD203-11.5-33-12R5**	102	57	45	55	12
11,8	–	12 H6/12 H7	G1/4	–	33	**SD203-11.8-33-12R5**	102	57	45	55	12
12,0	–	–	M14	–	36	**SD203-12.0-36-12R5**	102	57	45	55	12
12,3	–	–	–	–	36	**SD203-12.3-36-14R5**	102	57	45	60	14
12,5	–	–	MF14X1,5	–	36	**SD203-12.5-36-14R5**	107	62	45	60	14
13,0	–	–	MF14X1	–	36	**SD203-13.0-36-14R5**	107	62	45	60	14
13,5	–	–	–	–	37	**SD203-13.5-37-14R5**	107	62	45	60	14
14,0	–	–	–	–	37	**SD203-14.0-37-14R5**	107	62	45	60	14
14,2	–	–	–	–	38	**SD203-14.2-38-16R5**	115	67	48	65	16
14,5	–	–	MF16X1,5/UNF5/8-18	–	38	**SD203-14.5-38-16R5**	115	67	48	65	16
15,0	–	–	MF16X1	–	38	**SD203-15.0-38-16R5**	115	67	48	65	16
15,25	–	–	–	–	39	**SD203-15.25-39-16R5**	115	67	48	65	16
15,5	–	–	M18	–	39	**SD203-15.5-39-16R5**	115	67	48	65	16
16,0	–	–	–	–	39	**SD203-16.0-39-16R5**	115	67	48	65	16
16,5	–	–	MF18X1,5	–	40	**SD203-16.5-40-18R5**	123	75	48	73	18
17,0	–	–	MF18X1	–	40	**SD203-17.0-40-18R5**	123	75	48	73	18
17,5	–	–	M20	–	41	**SD203-17.5-41-18R5**	123	75	48	73	18
18,0	–	–	–	–	41	**SD203-18.0-41-18R5**	123	75	48	73	18

* For further information regarding reaming (see page 317) and threading (see page 249).

Intermediate diameters – drilling depth ~ 3 x D

Whistle Notch shank DIN 6537B



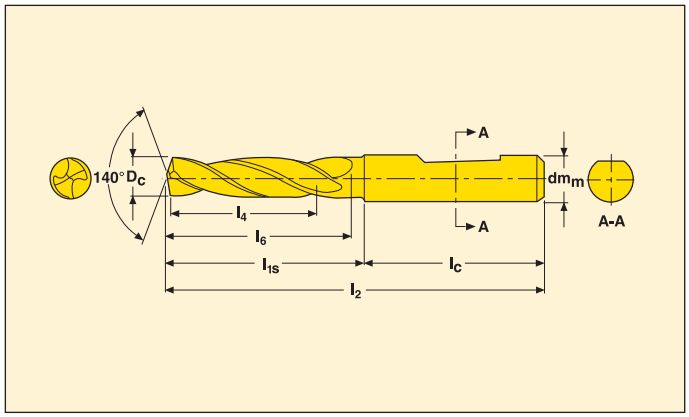

- External coolant
- For cutting and machining data see pages 121
- Coating: TiAlN + TiN
- Hole tolerance: IT 8-9

D_c	l_4	Part No.	Dimensions in mm				
			l_2	l_{1s}	l_c	l_6	dm_m h6
3,00-3,40	14	SD203-x.xx-14-6R5	62	26	36	20	6
3,41-3,75	15	SD203-x.xx-15-6R5	62	26	36	20	6
3,76-4,20	17	SD203-x.xx-17-6R5	66	30	36	24	6
4,21-4,50	18	SD203-x.xx-18-6R5	66	30	36	24	6
4,51-4,75	18	SD203-x.xx-18-6R5	66	30	36	26	6
4,76-5,20	20	SD203-x.xx-20-6R5	66	30	36	28	6
5,21-6,00	21	SD203-x.xx-21-6R5	66	30	36	28	6
6,01-6,60	23	SD203-x.xx-23-8R5	79	43	36	34	8
6,61-7,00	25	SD203-x.xx-25-6R5	79	43	36	34	8
7,01-7,50	25	SD203-x.xx-25-8R5	79	43	36	41	8
7,51-8,00	27	SD203-x.xx-27-8R5	79	43	36	41	8
8,01-8,60	27	SD203-x.xx-27-10R5	89	49	40	47	10
8,61-9,50	29	SD203-x.xx-29-10R5	89	49	40	47	10
9,51-10,00	31	SD203-x.xx-31-10R5	89	49	40	47	10
10,01-10,50	31	SD203-xx.xx-31-12R5	102	57	45	55	12
10,51-11,80	33	SD203-xx.xx-33-12R5	102	57	45	55	12
11,81-12,00	36	SD203-xx.xx-36-12R5	102	57	45	55	12
12,01-13,00	36	SD203-xx.xx-36-14R5	107	62	45	60	14
13,01-14,00	37	SD203-xx.xx-37-14R5	107	62	45	60	14
14,01-15,00	38	SD203-xx.xx-38-16R5	115	67	48	65	16
15,01-16,00	39	SD203-xx.xx-39-16R5	115	67	48	65	16
16,01-17,00	40	SD203-xx.xx-40-18R5	123	75	48	73	18
17,01-18,00	41	SD203-xx.xx-41-18R5	123	75	48	73	18
18,01-20,00	49	SD203-xx.xx-49-20R5	131	81	50	79	20

The drills are available in ∅ increments of 0,01 mm. Fill in required cutting ∅ instead of -xx.xx- according to the ordering example.
Cutting ∅ tolerance is equal to m7 unless otherwise specified. Ordering example for ∅ 11,3 mm: SD203-11.3-33-12R5.
Also available for intermediate diameters in the Custom Design software.

Seco Feedmax™ – SD203A

Drilling depth ~ 3 x D

Cylindrical shank DIN 6537A



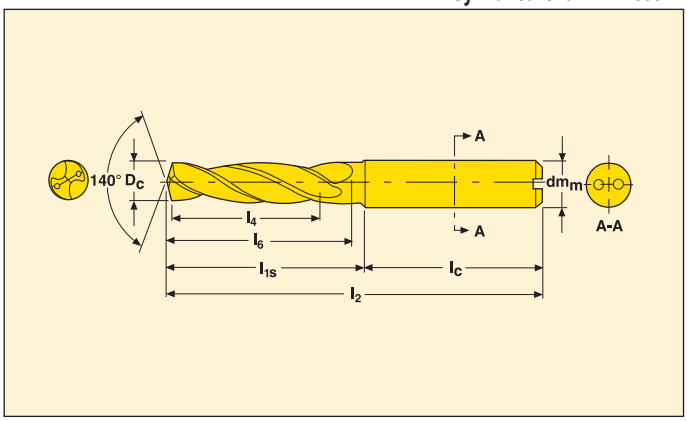

- Internal coolant
- For cutting and machining data see pages 122-123
- Coating: TiAlN + TiN
- Hole tolerance: IT 8-9

D_c m7 (mm)	D_c m7 (inch)	Reamer size*	Tap thread type	Forming tap	l_4	Part No.	Dimensions in mm				
							l_2	l_{1s}	l_c	l_6	dm_m h6
2,0	–	–	–	–	7	SD203A-2.0-7-4R1	41	13	28	11	4
2,1	–	–	–	–	7	SD203A-2.1-7-4R1	41	13	28	11	4
2,2	–	–	–	–	7	SD203A-2.2-7-4R1	41	13	28	11	4
2,3	–	–	–	–	8	SD203A-2.3-8-4R1	44	16	28	13	4
2,35	–	–	–	–	8	SD203A-2.35-8-4R1	44	16	28	13	4
2,38	3/32	–	–	–	8	SD203A-00937-031-0157R1	44	16	28	13	4
2,4	–	–	–	–	8	SD203A-2.4-8-4R1	44	16	28	13	4
2,5	–	–	–	–	8	SD203A-2.5-8-4R1	44	16	28	13	4
2,6	–	–	–	–	8	SD203A-2.6-8-4R1	44	16	28	13	4
2,7	–	–	–	–	9	SD203A-2.7-9-4R1	44	16	28	15	4
2,78	7/64	–	–	–	9	SD203A-01095-035-0157R1	44	16	28	15	4
2,8	–	–	–	–	9	SD203A-2.8-9-4R1	44	16	28	15	4
2,9	–	–	–	–	9	SD203A-2.9-9-4R1	44	16	28	15	4
3,0	–	–	–	–	14	SD203A-3.0-14-6R1	62	26	36	20	6
3,4	–	–	–	–	14	SD203A-3.4-14-6R1	62	26	36	20	6
3,5	–	–	UNC8-32/MF4X0,5/UNF8-36	–	15	SD203A-3.5-15-6R1	62	26	36	20	6
3,8	–	–	–	–	17	SD203A-3.8-17-6R1	66	30	36	24	6
4,0	–	–	–	–	17	SD203A-4.0-17-6R1	66	30	36	24	6
4,2	–	–	M5	–	17	SD203A-4.2-17-6R1	66	30	36	24	6
4,3	–	–	–	–	18	SD203A-4.3-18-6R1	66	30	36	24	6
4,5	–	–	UNC12-25/MF5X0,5	–	18	SD203A-4.5-18-6R1	66	30	36	24	6
4,8	–	–	–	MF5	20	SD203A-4.8-20-6R1	66	30	36	28	6
4,9	–	5 H7	–	–	20	SD203A-4.9-20-6R1	66	30	36	28	6
5,0	–	–	M6	–	20	SD203A-5.0-20-6R1	66	30	36	28	6
5,1	–	–	UNC1/4-20	–	20	SD203A-5.1-20-6R1	66	30	36	28	6
5,2	–	–	MF6X0,75	–	20	SD203A-5.2-20-6R1	66	30	36	28	6
5,5	–	–	UNF1/4-28	–	21	SD203A-5.5-21-6R1	66	30	36	28	6
5,954	15/64	–	–	–	21	SD203A-02344-083-0236R1	66	30	36	28	6
5,8	–	6 H6	–	–	21	SD203A-5.8-21-6R1	66	30	36	28	6
4,9	–	6 H6/6 H7	–	–	20	SD203A-5.9-21-6R1	66	30	36	28	6
6,0	–	–	M7	–	21	SD203A-6.0-21-6R1	66	30	36	28	6
6,35	1/4	–	–	–	23	SD203A-02500-091-0315R1	79	43	36	34	8
6,5	–	–	–	–	23	SD203A-6.5-23-8R1	79	43	36	34	8
6,6	–	–	UNC5/6-18	–	23	SD203A-6.6-23-8R1	79	43	36	34	8
6,746	17/64	–	–	–	25	SD203A-02656-098-0315R1	79	43	36	34	8
6,8	–	7 H6	M8	–	25	SD203A-6.8-25-8R1	79	43	36	34	8
6,9	–	7 H6/7 H7	UNF5/16-24	–	25	SD203A-6.9-25-8R1	79	43	36	34	8
7,0	–	–	MF8X1	–	25	SD203A-7.0-25-8R1	79	43	36	34	8
7,145	9/32	–	–	–	25	SD203A-02813-098-0315R1	79	43	36	41	8
7,5	–	–	–	–	25	SD203A-7.5-25-8R1	79	43	36	41	8
7,541	19/64	–	–	–	27	SD203A-02969-106-0315R1	79	43	36	41	8

* For further information regarding reaming (see page 317) and threading (see page 249).

Seco Feedmax™ – SD203A

Drilling depth ~ 3 x D

Cylindrical shank DIN 6537A



- Internal coolant
- For cutting and machining data see pages 122-123
- Coating: TiAlN + TiN
- Hole tolerance: IT 8-9

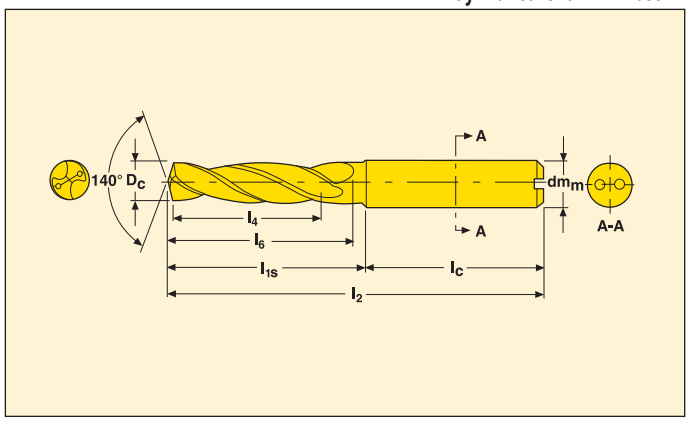

D_c m7 (mm)	D_c m7 (inch)	Reamer size*	Tap thread type	Forming tap	l_4	Part No.	Dimensions in mm				
							l_2	l_{1s}	l_c	l_6	dm_m h6
7,8	–	8 H6	–	–	27	SD203A-7.8-27-8R1	79	43	36	41	8
7,9	–	8 H6/8 H7	–	–	27	SD203A-7.9-27-8R1	79	43	36	41	8
7,938	5/16	–	–	–	27	SD203A-03125-106-0315R1	79	43	36	41	8
8,0	–	–	UNC3/8-16	–	27	SD203A-8.0-27-8R1	79	43	36	41	8
8,1	–	–	–	–	27	SD203A-8.1-27-10R1	89	49	40	47	10
8,2	–	–	–	–	27	SD203A-8.2-27-10R1	89	49	40	47	10
8,334	21/64	–	–	–	27	SD203A-03281-106-0394R1	89	49	40	47	10
8,5	–	–	–	–	27	SD203A-8.5-27-10R1	89	49	40	47	10
8,6	–	–	–	–	27	SD203A-8.6-27-10R1	89	49	40	47	10
8,7	–	–	–	–	29	SD203A-8.7-29-10R1	89	49	40	47	10
8,733	11/32	–	–	–	29	SD203A-03438-114-0394R1	89	49	40	47	10
8,8	–	9 H6	G1/8/MF10X1,25	–	29	SD203A-8.8-29-10R1	89	49	40	47	10
8,9	–	9 H6/9 H7	–	–	29	SD203A-8.9-29-10R1	89	49	40	47	10
9,0	–	–	MF10X1	–	29	SD203A-9.0-29-10R1	89	49	40	47	10
9,129	23/64	–	–	–	29	SD203A-03594-114-0394R1	89	49	40	47	10
9,5	–	–	–	–	29	SD203A-9.5-29-10R1	89	49	40	47	10
9,525	3/8	–	–	–	31	SD203A-03750-122-0394R1	89	49	40	47	10
9,75	–	–	–	–	31	SD203A-9.75-31-10R1	89	49	40	47	10
9,8	–	10 H6/10 H7	–	–	31	SD203A-9.8-31-10R1	89	49	40	47	10
9,9	–	10 H6/10 H7	UNF7/16-20	–	31	SD203A-9.9-31-10R1	89	49	40	47	10
9,921	25/64	–	–	–	31	SD203A-03906-122-0394R1	89	49	40	47	10
10,0	–	–	–	–	31	SD203A-10.0-31-10R1	89	49	40	47	10
10,2	–	–	M12	–	31	SD203A-10.2-31-12R1	102	57	45	55	12
10,32	13/32	–	–	–	31	SD203A-04063-122-0472R1	102	57	45	55	12
10,4	–	–	–	–	31	SD203A-10.4-31-12R1	102	57	45	55	12
10,5	–	–	MF12X1,5	–	31	SD203A-10.5-31-12R1	102	57	45	55	12
10,716	27/64	–	–	–	33	SD203A-04219-130-0472R1	102	57	45	55	12
10,8	–	11 H6/11 H7	UNC1/2-13/MF12X1,25	–	33	SD203A-10.8-33-12R1	102	57	45	55	12
11,0	–	–	MF12X1/NPTF1/4	–	33	SD203A-11.0-33-12R1	102	57	45	55	12
11,113	7/16	–	–	–	33	SD203A-04375-130-0472R1	102	57	45	55	12
11,5	–	–	UNF1/2-20	–	33	SD203A-11.5-33-12R1	102	57	45	55	12
11,509	29/64	–	–	–	33	SD203A-04531-130-0472R1	102	57	45	55	12
11,8	–	12 H6/12 H7	G1/4	–	33	SD203A-11.8-33-12R1	102	57	45	55	12
11,908	15/32	12 H6/12 H7	–	–	36	SD203A-04688-142-0472R1	102	57	45	55	12
12,0	–	–	–	–	36	SD203A-12.0-36-12R1	102	57	45	55	12
12,25	–	–	M14	–	36	SD203A-12.25-36-14R1	107	62	45	60	14
12,3	–	–	–	–	36	SD203A-12.3-36-14R1	107	62	45	60	14
12,304	31/64	–	–	–	36	SD203A-04844-142-0551R1	107	62	45	60	14
12,5	–	–	MF14X1,5	–	36	SD203A-12.5-36-14R1	107	62	45	60	14
12,7	1/2	–	–	–	36	SD203A-05000-142-0551R1	107	62	45	60	14
12,8	–	13 H6/13 H7	MF14X1,25	–	36	SD203A-12.8-36-14R1	107	62	45	60	14
13,0	–	–	MF14X1	–	36	SD203A-13.0-36-14R1	107	62	45	60	14

* For further information regarding reaming (see page 317) and threading (see page 249).
For intermediate diameters see the Custom Design software.

Seco Feedmax™ – SD203A

Drilling depth ~ 3 x D

Cylindrical shank DIN 6537A



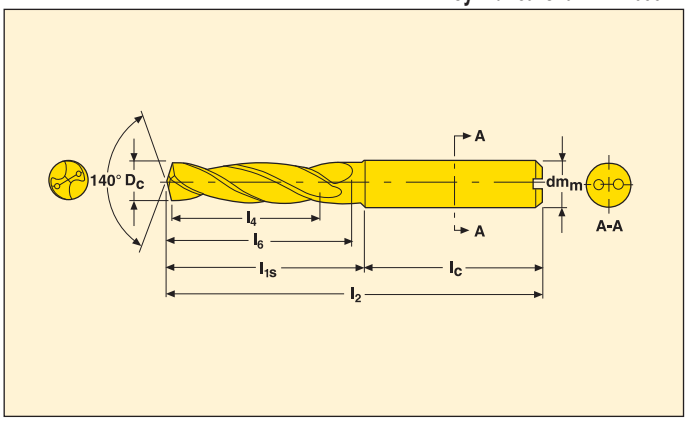

- Internal coolant
- For cutting and machining data see pages 122-123
- Coating: TiAlN + TiN
- Hole tolerance: IT 8-9

D_c m7 (mm)	D_c m7 (inch)	Reamer size*	Tap thread type	Forming tap	l_4	Part No.	Dimensions in mm				
							l_2	l_{1s}	l_c	l_6	dm_m h6
13,096	33/64	–	–	–	37	SD203A-05156-146-0551R1	107	62	45	60	14
13,492	17/32	–	–	–	37	SD203A-05312-146-0551R1	107	62	45	60	14
13,5	–	–	–	–	37	SD203A-13.5-37-14R1	107	62	45	60	14
13,8	–	14 H6/14 H7	–	–	37	SD203A-13.8-37-14R1	107	62	45	60	14
13,891	35/64	14 H6/14 H7	–	–	37	SD203A-05469-146-0551R1	107	62	45	60	14
14,0	–	–	–	–	37	SD203A-14.0-37-14R1	107	62	45	60	14
14,25	–	–	–	–	38	SD203A-14.25-38-16R1	115	67	48	65	16
14,5	–	–	MF16X1,5/UNF5/8-18	–	38	SD203A-14.5-38-16R1	115	67	48	65	16
14,8	–	15 H6/15 H7	–	–	38	SD203A-14.8-38-16R1	115	67	48	65	16
15,0	–	–	MF16X1	–	38	SD203A-15.0-38-16R1	115	67	48	65	16
15,5	–	–	M18	–	39	SD203A-15.5-39-16R1	115	67	48	65	16
15,8	–	16 H6/16 H7	–	–	39	SD203A-15.8-39-16R1	115	67	48	65	16
16,0	–	–	–	–	39	SD203A-16.0-39-16R1	115	67	48	65	16
16,5	–	–	MF18X1,5	–	40	SD203A-16.5-40-18R1	123	75	48	73	18
16,8	–	17 H6/17 H7	–	–	40	SD203A-16.8-40-18R1	123	75	48	73	18
17,0	–	–	MF18X1	–	40	SD203A-17.0-40-18R1	123	75	48	73	18
17,5	–	–	M20	–	41	SD203A-17.5-41-18R1	123	75	48	73	18
17,8	–	18 H6/18 H7	–	–	41	SD203A-17.8-41-18R1	123	75	48	73	18
18,0	–	–	–	–	41	SD203A-18.0-41-18R1	123	75	48	73	18
18,5	–	–	MF20X1,5	–	49	SD203A-18.5-49-20R1	131	81	50	79	20
18,8	–	19 H6/19 H7	–	–	49	SD203A-18.8-49-20R1	131	81	50	79	20
19,0	–	–	G1/2/MF20X1	–	49	SD203A-19.0-49-20R1	131	81	50	79	20
19,05	3/4	–	–	–	49	SD203A-19.05-49-20R1	131	81	50	79	20
19,5	–	–	M22	–	49	SD203A-19.5-49-20R1	131	81	50	79	20
19,8	–	20 H6/20 H7	–	–	49	SD203A-19.8-49-20R1	131	81	50	79	20
20,0	–	–	–	–	49	SD203A-20.0-49-20R1	131	81	50	79	20

* For further information regarding reaming (see page 317) and threading (see page 249).
For intermediate diameters see the Custom Design software.

Seco Feedmax™ – SD203A

Intermediate diameters – drilling depth ~ 3 x D

Cylindrical shank DIN 6537A



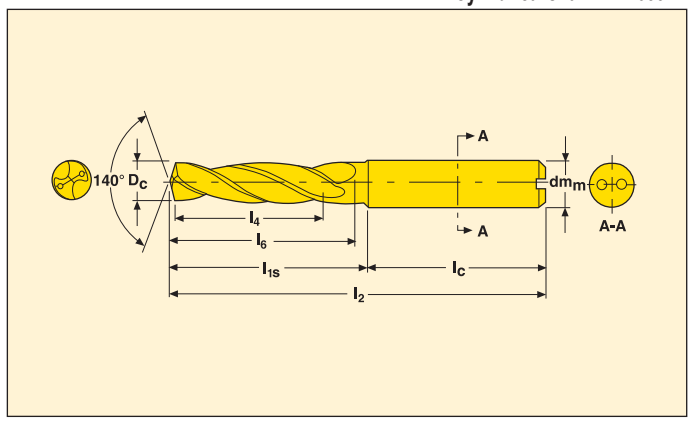

- Internal coolant
- For cutting and machining data see pages 122-123
- Coating: TiAlN + TiN
- Hole tolerance: IT 8-9

D_c	l_4	Part No.	Dimensions in mm				
			l_2	l_{1s}	l_c	l_6	dm_m h6
2,00-2,20	7	**SD203A-x.xx-7-4R1**	41	13	28	11	4
2,21-2,60	8	**SD203A-x.xx-8-4R1**	44	16	28	13	4
2,61-2,99	9	**SD203A-x.xx-9-4R1**	44	16	28	15	4
3,00-3,40	14	**SD203A-x.xx-14-6R1**	62	26	36	20	6
3,41-3,75	15	**SD203A-x.xx-15-6R1**	62	26	36	20	6
3,76-4,20	17	**SD203A-x.xx-17-6R1**	66	30	36	24	6
4,21-4,50	18	**SD203A-x.xx-18-6R1**	66	30	36	24	6
4,51-4,75	18	**SD203A-x.xx-18-6R1**	66	30	36	26	6
4,76-5,20	20	**SD203A-x.xx-20-6R1**	66	30	36	28	6
5,21-6,00	21	**SD203A-x.xx-21-6R1**	66	30	36	28	6
6,01-6,60	23	**SD203A-x.xx-23-8R1**	79	43	36	34	8
6,61-7,00	25	**SD203A-x.xx-25-8R1**	79	43	36	34	8
7,01-7,50	25	**SD203A-x.xx-25-8R1**	79	43	36	41	8
7,51-8,00	27	**SD203A-x.xx-27-8R1**	79	43	36	41	8
8,01-8,60	27	**SD203A-x.xx-27-10R1**	89	49	40	47	10
8,61-9,50	29	**SD203A-x.xx-29-10R1**	89	49	40	47	10
9,51-10,00	31	**SD203A-x.xx-31-10R1**	89	49	40	47	10
10,01-10,50	31	**SD203A-xx.xx-31-12R1**	102	57	45	55	12
10,51-11,80	33	**SD203A-xx.xx-33-12R1**	102	57	45	55	12
11,81-12,00	36	**SD203A-xx.xx-36-12R1**	102	57	45	55	12
12,01-13,00	36	**SD203A-xx.xx-36-14R1**	107	62	45	60	14
13,01-14,00	37	**SD203A-xx.xx-37-14R1**	107	62	45	60	14
14,01-15,00	38	**SD203A-xx.xx-38-16R1**	115	67	48	65	16
15,01-16,00	39	**SD203A-xx.xx-39-16R1**	115	67	48	65	16
16,01-17,00	40	**SD203A-xx.xx-40-18R1**	123	75	48	73	18
17,01-18,00	41	**SD203A-xx.xx-41-18R1**	123	75	48	73	18
18,01-20,00	49	**SD203A-xx.xx-49-20R1**	131	81	50	79	20

The drills are available in ∅ increments of 0,01 mm. Fill in required cutting ∅ instead of -xx.xx- according to the ordering example.
Cutting ∅ tolerance is equal to m7 unless otherwise specified. Ordering example for ∅ 11,3 mm: SD203A-11.3-33-12R1.
Also available for intermediate diameters in the Custom Design software.

Drilling depth ~ 3 x D

Whistle Notch shank DIN 6537B



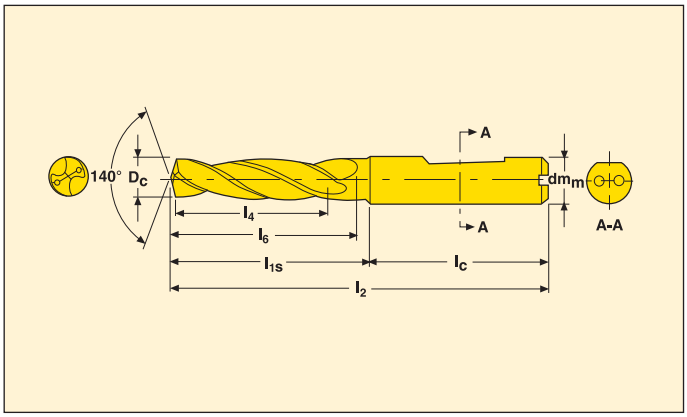

- Internal coolant
- For cutting and machining data see pages 122-123
- Coating: TiAlN + TiN
- Hole tolerance: IT 8-9

D_C m7 (mm)	D_C m7 (inch)	Reamer size*	Tap thread type	Forming tap	l_4	Part No.	Dimensions in mm				
							l_2	l_{1s}	l_c	l_6	dm_m h6
6,0	–	–	M7	–	21	SD203A-6.0-21-6R5	66	30	36	28	6
6,5	–	–	–	–	23	SD203A-6.5-23-8R5	79	43	36	34	8
6,6	–	–	UNC5/16-18	–	23	SD203A-6.6-23-8R5	79	43	36	34	8
6,8	–	7 H6/7 H7	M8	–	25	SD203A-6.8-25-8R5	79	43	36	34	8
6,9	–	7 H6/7 H7	UNF5/16-24	–	25	SD203A-6.9-25-8R5	79	43	36	34	8
7,0	–	–	MF8X1	–	25	SD203A-7.0-25-8R5	79	43	36	34	8
7,5	–	–	–	–	25	SD203A-7.5-25-8R5	79	43	36	41	8
7,8	–	8 H6/8 H7	–	–	27	SD203A-7.8-27-8R5	79	43	36	41	8
8,0	–	–	UNC3/8-16	–	27	SD203A-8.0-27-8R5	79	43	36	41	8
8,1	–	–	–	–	27	SD203A-8.1-27-10R5	89	49	40	47	10
8,2	–	–	–	–	27	SD203A-8.2-27-10R5	89	49	40	47	10
8,5	–	–	M10	–	27	SD203A-8.5-27-10R5	89	49	40	47	10
8,6	–	–	–	–	27	SD203A-8.6-27-10R5	89	49	40	47	10
8,8	–	9 H6/9 H7	G1/8/MF10X1,25	–	29	SD203A-8.8-29-10R5	89	49	40	47	10
9,0	–	–	MF10X1	–	29	SD203A-9.0-29-10R5	89	49	40	47	10
9,5	–	–	–	–	29	SD203A-9.5-29-10R5	89	49	40	47	10
9,8	–	10 H6/10 H7	–	–	31	SD203A-9.8-31-10R5	89	49	40	47	10
10,0	–	–	–	–	31	SD203A-10.0-31-10R5	89	49	40	47	10
10,2	–	–	M12	–	31	SD203A-10.2-31-12R5	102	57	45	55	12
10,5	–	–	MF12X1,5	–	31	SD203A-10.5-31-12R5	102	57	45	55	12
10,8	–	11 H6/11 H7	UNC1/2/MF12X1,25	–	33	SD203A-10.8-33-12R5	102	57	45	55	12
11,0	–	–	MF12X1/NPTF1/4	–	33	SD203A-11.0-33-12R5	102	57	45	55	12
11,5	–	–	UNF1/2-20	–	33	SD203A-11.5-33-12R5	102	57	45	55	12
11,8	–	–	G1/4	–	33	SD203A-11.8-33-12R5	102	57	45	55	12
12,0	–	–	M14	–	36	SD203A-12.0-36-12R5	102	57	45	55	12
12,3	–	–	–	–	36	SD203A-12.3-36-14R5	107	62	45	60	14
12,5	–	–	MF14X1,5	–	36	SD203A-12.5-36-14R5	107	62	45	60	14
13,0	–	–	MF14X1	–	36	SD203A-13.0-36-14R5	107	62	45	60	14
13,5	–	–	–	–	37	SD203A-13.5-37-14R5	107	62	45	60	14
14,0	–	–	–	–	37	SD203A-14.0-37-14R5	107	62	45	60	14

For intermediate diameters see the Custom Design software.

Intermediate diameters – drilling depth ~ 3 x D

Whistle Notch shank DIN 6537B



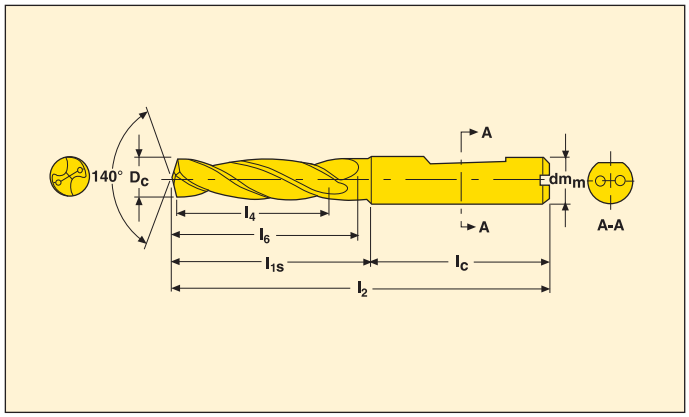

- Internal coolant
- For cutting and machining data see pages 122-123
- Coating: TiAlN + TiN
- Hole tolerance: IT 8-9

D_c	l_4	Part No.	Dimensions in mm				
			l_2	l_{1s}	l_c	l_6	dm_m h6
3,00-3,40	14	SD203A-x.xx-14-6R5	62	26	36	20	6
3,41-3,75	15	SD203A-x.xx-15-6R5	62	26	36	20	6
3,76-4,20	17	SD203A-x.xx-17-6R5	66	30	36	24	6
4,21-4,75	18	SD203A-x.xx-18-6R5	66	30	36	26	6
4,76-5,20	20	SD203A-x.xx-20-6R5	66	30	36	28	6
5,21-6,00	21	SD203A-x.xx-21-6R5	66	30	36	28	6
6,01-6,60	23	SD203A-x.xx-23-8R5	79	43	36	34	8
6,61-7,00	25	SD203A-x.xx-25-8R5	79	43	36	34	8
7,01-7,50	25	SD203A-x.xx-25-8R5	79	43	36	41	8
7,51-8,00	27	SD203A-x.xx-27-8R5	79	43	36	41	8
8,01-8,60	27	SD203A-x.xx-27-10R5	89	49	40	47	10
8,61-9,50	29	SD203A-x.xx-29-10R5	89	49	40	47	10
9,51-10,00	31	SD203A-x.xx-31-10R5	89	49	40	47	10
10,01-10,50	31	SD203A-xx.xx-31-12R5	102	57	45	55	12
10,51-11,80	33	SD203A-xx.xx-33-12R5	102	57	45	55	12
11,81-12,00	36	SD203A-xx.xx-36-12R5	102	57	45	55	12
12,01-13,00	36	SD203A-xx.xx-36-14R5	107	62	45	60	14
13,01-14,00	37	SD203A-xx.xx-37-14R5	107	62	45	60	14
14,01-15,00	38	SD203A-xx.xx-38-16R5	115	67	48	65	16
15,01-16,00	39	SD203A-xx.xx-39-16R5	115	67	48	65	16
16,01-17,00	40	SD203A-xx.xx-40-18R5	123	75	48	73	18
17,01-18,00	41	SD203A-xx.xx-41-18R5	123	75	48	73	18
18,01-20,00	49	SD203A-xx.xx-49-20R5	131	81	50	79	20

The drills are available in ∅ increments of 0,01 mm. Fill in required cutting ∅ instead of -xx.xx- according to the ordering example.
Cutting ∅ tolerance is equal to m7 unless otherwise specified. Ordering example for ∅ 11,3 mm: SD203A-11.3-33-12R5.
Also available for intermediate diameters in the Custom Design software.

Seco Feedmax™ – SD205A

Drilling depth ~ 5 x D

Cylindrical shank DIN 6537A



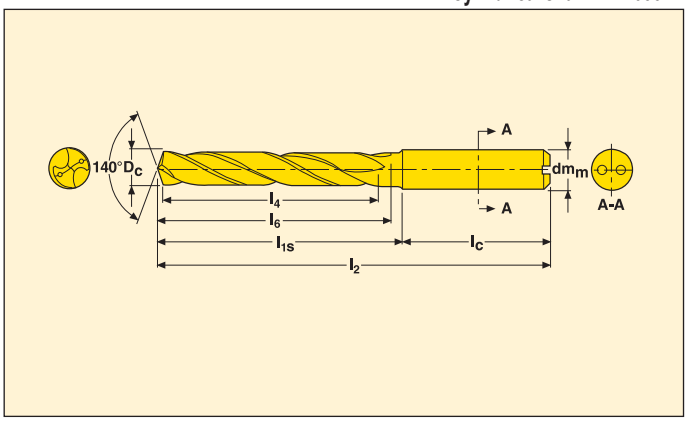

- Internal coolant
- For cutting and machining data see pages 124-125
- Coating: TiAlN + TiN
- Hole tolerance: IT 8-9

D_c m7 (mm)	D_c m7 (inch)	Reamer size*	Tap thread type	Forming tap	l_4	Part No.	Dimensions in mm				
							l_2	l_{1s}	l_c	l_6	dm_m h6
2,0	–	–	–	–	12	SD205A-2.0-12-4R1	46	18	28	15	4
2,1	–	–	–	–	12	SD205A-2.1-12-4R1	46	18	28	15	4
2,2	–	–	–	–	12	SD205A-2.2-12-4R1	46	18	28	15	4
2,3	–	–	–	–	12	SD205A-2.3-12-4R1	46	18	28	15	4
2,4	–	–	–	–	13	SD205A-2.4-13-4R1	50	22	28	18	4
2,5	–	–	–	–	13	SD205A-2.5-13-4R1	50	22	28	18	4
2,6	–	–	–	–	13	SD205A-2.6-13-4R1	50	22	28	18	4
2,7	–	–	–	–	15	SD205A-2.7-15-4R1	50	22	28	21	4
2,781	7/64	–	–	–	15	SD205A-01095-059-0157R1	50	22	28	21	4
2,8	–	–	–	–	15	SD205A-2.8-15-4R1	50	22	28	21	4
2,9	–	–	–	–	15	SD205A-2.9-15-4R1	50	22	28	21	4
3,0	–	–	–	–	21	SD205A-3.0-21-6R1	66	30	36	26	6
3,1	–	–	–	–	21	SD205A-3.1-21-6R1	66	30	36	26	6
3,2	–	–	–	–	21	SD205A-3.2-21-6R1	66	30	36	26	6
3,25	–	–	–	M3,5	21	SD205A-3.25-21-6R1	66	30	36	26	6
3,3	–	–	M4	–	21	SD205A-3.3-21-6R1	66	30	36	26	6
3,4	–	–	–	–	21	SD205A-3.4-21-6R1	66	30	36	26	6
3,5	–	–	UNC8-32/MF4X0,5/UNF8-36	–	21	SD205A-3.5-21-6R1	66	30	36	26	6
3,6	–	–	–	–	21	SD205A-3.6-21-6R1	66	30	36	26	6
3,7	–	–	M4,5	M4	21	SD205A-3.7-21-6R1	66	30	36	26	6
3,8	–	–	–	–	27	SD205A-3.8-27-6R1	74	38	36	34	6
3,9	–	4 H7	UNC10-24	–	27	SD205A-3.9-27-6R1	74	38	36	34	6
4,0	–	–	–	–	27	SD205A-4.0-27-6R1	74	38	36	34	6
4,1	–	–	UNF10-32	–	27	SD205A-4.1-27-6R1	74	38	36	34	6
4,2	–	–	M5	–	27	SD205A-4.2-27-6R1	74	38	36	34	6
4,3	–	–	–	–	27	SD205A-4.3-27-6R1	74	38	36	34	6
4,4	–	–	–	–	27	SD205A-4.4-27-6R1	74	38	36	34	6
4,5	–	–	UNC12-24/MF5X0,5	–	27	SD205A-4.5-27-6R1	74	38	36	34	6
4,6	–	–	–	–	27	SD205A-4.6-27-6R1	74	38	36	34	6
4,65	–	–	–	M5	27	SD205A-4.65-27-6R1	74	38	36	34	6
4,7	–	–	–	–	27	SD205A-4.7-27-6R1	74	38	36	34	6
4,8	–	–	–	MF5	32	SD205A-4.8-32-6R1	82	46	36	44	6
4,9	–	5 H7	–	–	32	SD205A-4.9-32-6R1	82	46	36	44	6
5,0	–	–	M6	–	32	SD205A-5.0-32-6R1	82	46	36	44	6
5,1	–	–	UNC1/4-20	–	32	SD205A-5.1-32-6R1	82	46	36	44	6
5,2	–	–	MF6X0,75	–	32	SD205A-5.2-32-6R1	82	46	36	44	6
5,3	–	–	–	–	32	SD205A-5.3-32-6R1	82	46	36	44	6
5,4	–	–	–	–	32	SD205A-5.4-32-6R1	82	46	36	44	6
5,5	–	–	UNF1/4-28	–	32	SD205A-5.5-32-6R1	82	46	36	44	6
5,55	–	–	–	M6	32	SD205A-5.55-32-6R1	82	46	36	44	6
5,6	–	–	–	–	32	SD205A-5.6-32-6R1	82	46	36	44	6
5,7	–	–	–	–	32	SD205A-5.7-32-6R1	82	46	36	44	6

* For further information regarding reaming (see page 317) and threading (see page 249).
For intermediate diameters see the Custom Design software.

Seco Feedmax™ – SD205A

Drilling depth ~ 5 x D

Cylindrical shank DIN 6537A



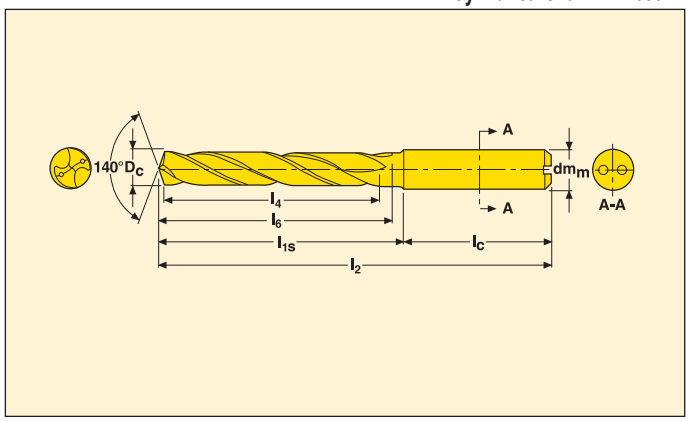

- Internal coolant
- For cutting and machining data see pages 124-125
- Coating: TiAlN + TiN
- Hole tolerance: IT 8-9

D_c m7 (mm)	D_c m7 (inch)	Reamer size*	Tap thread type	Forming tap	l_4	Part No.	Dimensions in mm				
							l_2	l_{1s}	l_c	l_6	dm_m h6
5,8	–	6 H6	–	–	32	SD205A-5.8-32-6R1	82	46	36	44	6
5,9	–	6 H6/6 H7	–	–	32	SD205A-5.9-32-6R1	82	46	36	44	6
5,951	15/64	–	–	–	32	SD205A-02343-126-0236R1	82	46	36	44	6
6,0	–	–	M7	–	32	SD205A-6.0-32-6R1	82	46	36	44	6
6,1	–	–	NPTF1/16	–	32	SD205A-6.1-32-6R1	82	46	36	44	6
6,2	–	–	–	–	35	SD205A-6.2-35-8R1	91	55	36	53	8
6,3	–	–	–	–	35	SD205A-6.3-35-8R1	91	55	36	53	8
6,35	1/4	–	–	–	35	SD205A-02500-138-0315R1	91	55	36	53	8
6,4	–	–	–	–	35	SD205A-6.4-35-8R1	91	55	36	53	8
6,5	–	–	–	–	35	SD205A-6.5-35-8R1	91	55	36	53	8
6,55	–	–	–	–	35	SD205A-6.55-35-8R1	91	55	36	53	8
6,6	–	–	UNC5/16-18	–	35	SD205A-6.6-35-8R1	91	55	36	53	8
6,65	–	–	–	–	35	SD205A-6.65-35-8R1	91	55	36	53	8
6,7	–	–	–	–	35	SD205A-6.7-35-8R1	91	55	36	53	8
6,747	17/64	–	–	–	40	SD205A-02656-157-0315R1	91	55	36	53	8
6,8	–	7 H6	M8	–	40	SD205A-6.8-40-8R1	91	55	36	53	8
6,9	–	7 H6/ H7	UNF5/16-24	–	40	SD205A-6.9-40-8R1	91	55	36	53	8
7,0	–	–	MF8X1	–	40	SD205A-7.0-40-8R1	91	55	36	53	8
7,1	–	–	–	–	40	SD205A-7.1-40-8R1	91	55	36	53	8
7,144	9/32	–	–	–	40	SD205A-02813-157-0315R1	91	55	36	53	8
7,2	–	–	MF8X0,75	–	40	SD205A-7.2-40-8R1	91	55	36	53	8
7,3	–	–	–	–	40	SD205A-7.3-40-8R1	91	55	36	53	8
7,4	–	–	–	–	40	SD205A-7.4-40-8R1	91	55	36	53	8
7,5	–	–	–	–	40	SD205A-7.5-40-8R1	91	55	36	53	8
7,541	19/64	–	–	–	42	SD205A-02969-165-0315R1	91	55	36	53	8
7,55	–	–	–	MF8	42	SD205A-7.55-42-8R1	91	55	36	53	8
7,6	–	–	–	–	42	SD205A-7.6-42-8R1	91	55	36	53	8
7,65	–	–	–	–	42	SD205A-7.65-42-8R1	91	55	36	53	8
7,7	–	–	–	–	42	SD205A-7.7-42-8R1	91	55	36	53	8
7,8	–	8 H6	–	–	42	SD205A-7.8-42-8R1	91	55	36	53	8
7,9	–	8 H6/ 8 H7	–	–	42	SD205A-7.9-42-8R1	91	55	36	53	8
7,938	5/16	–	–	–	42	SD205A-03125-165-0315R1	91	55	36	53	8
8,0	–	–	UNC3/8-16	–	42	SD205A-8.0-42-8R1	91	55	36	53	8
8,1	–	–	–	–	42	SD205A-8.1-42-10R1	103	63	40	61	10
8,2	–	–	–	–	42	SD205A-8.2-42-10R1	103	63	40	61	10
8,3	–	–	–	–	42	SD205A-8.3-42-10R1	103	63	40	61	10
8,334	21/64	–	–	–	42	SD205A-03281-165-0394R1	103	63	40	61	10
8,4	–	–	NPT1/8/NPTF1/8	–	42	SD205A-8.4-42-10R1	103	63	40	61	10
8,5	–	–	M10	–	42	SD205A-8.5-42-10R1	103	63	40	61	10
8,6	–	–	–	–	45	SD205A-8.6-45-10R1	103	63	40	61	10
8,7	–	–	–	–	45	SD205A-8.7-45-10R1	103	63	40	61	10
8,733	11/32	–	–	–	45	SD205A-03438-177-0394R1	103	63	40	61	10

* For further information regarding reaming (see page 317) and threading (see page 249).
For intermediate diameters see the Custom Design software.

Seco Feedmax™ – SD205A

Drilling depth ~ 5 x D

Cylindrical shank DIN 6537A



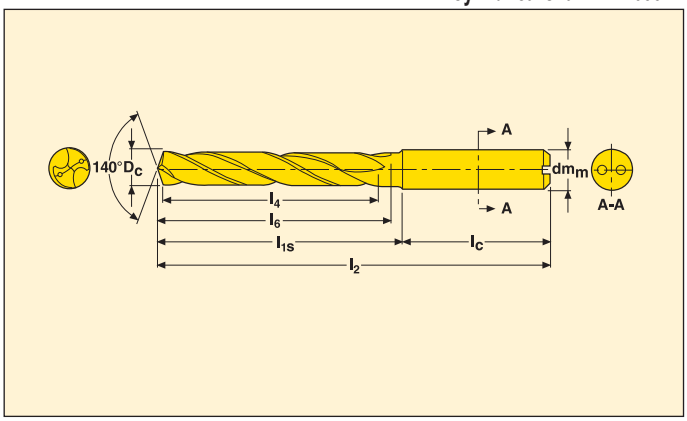

- Internal coolant
- For cutting and machining data see pages 124-125
- Coating: TiAlN + TiN
- Hole tolerance: IT 8-9

D_c m7 (mm)	D_c m7 (inch)	Reamer size*	Tap thread type	Forming tap	l_4	Part No.	Dimensions in mm				
							l_2	l_{1s}	l_c	l_6	dm_m h6
8,8	–	9 H6	G1/8/MF10X1,25	–	45	SD205A-8.8-45-10R1	103	63	40	61	10
8,9	–	9 H6/9 H7	–	–	45	SD205A-8.9-45-10R1	103	63	40	61	10
9,0	–	–	MF10X1	–	45	SD205A-9.0-45-10R1	103	63	40	61	10
9,1	–	–	–	–	45	SD205A-9.1-45-10R1	103	63	40	61	10
9,128	23/64	–	–	–	45	SD205A-03594-177-0394R1	103	63	40	61	10
9,2	–	–	MF10X0,75	–	45	SD205A-9.2-45-10R1	103	63	40	61	10
9,3	–	–	–	–	45	SD205A-9.3-45-10R1	103	63	40	61	10
9,4	–	–	UNC7/16-14	–	45	SD205A-9.4-45-10R1	103	63	40	61	10
9,5	–	–	–	–	45	SD205A-9.5-45-10R1	103	63	40	61	10
9,525	3/8	–	–	–	48	SD205A-03750-189-0394R1	103	63	40	61	10
9,55	–	–	–	MF10	48	SD205A-9.55-48-10R1	103	63	40	61	10
9,6	–	–	–	–	48	SD205A-9.6-48-10R1	103	63	40	61	10
9,7	–	–	–	–	48	SD205A-9.7-48-10R1	103	63	40	61	10
9,75	–	–	–	–	48	SD205A-9.75-48-10R1	103	63	40	61	10
9,8	–	10 H6/10 H7	–	–	48	SD205A-9.8-48-10R1	103	63	40	61	10
9,9	–	10 H6/10 H7	UNF7/16-20	–	48	SD205A-9.9-48-10R1	103	63	40	61	10
9,922	25/64	–	–	–	48	SD205A-03906-189-0394R1	103	63	40	61	10
10,0	–	–	–	–	48	SD205A-10.0-48-10R1	103	63	40	61	10
10,2	–	–	M12	–	48	SD205A-10.2-48-12R1	118	73	45	71	12
10,319	13/32	–	–	–	48	SD205A-04063-189-0472R1	118	73	45	71	12
10,4	–	–	–	–	48	SD205A-10.4-48-12R1	118	73	45	71	12
10,5	–	–	MF12X1,5	–	48	SD205A-10.5-48-12R1	118	73	45	71	12
10,7	–	–	–	–	56	SD205A-10.7-56-12R1	118	73	45	71	12
10,716	27/64	–	–	–	56	SD205A-04219-221-0472R1	118	73	45	71	12
10,8	–	11 H6/11 H7	UNC1/2-13/MF12X1,25	–	56	SD205A-10.8-56-12R1	118	73	45	71	12
11,0	–	–	MF12X1/NPTF1/4	–	56	SD205A-11.0-56-12R1	118	73	45	71	12
11,10	–	–	NPT1/4	–	56	SD205A-11.10-56-12R1	118	73	45	71	12
11,113	7/16	–	–	–	56	SD205A-04375-221-0472R1	118	73	45	71	12
11,2	–	–	–	–	56	SD205A-11.2-56-12R1	118	73	45	71	12
11,3	–	–	–	–	56	SD205A-11.3-56-12R1	118	73	45	71	12
11,40	–	–	–	–	56	SD205A-11.40-56-12R1	118	73	45	71	12
11,5	–	–	UNF1/2-20	–	56	SD205A-11.5-56-12R1	118	73	45	71	12
11,509	29/64	–	–	–	56	SD205A-04531-221-0472R1	118	73	45	71	12
11,55	–	–	–	MF12	56	SD205A-11.55-56-12R1	118	73	45	71	12
11,7	–	–	–	–	56	SD205A-11.7-56-12R1	118	73	45	71	12
11,8	–	12 H6/12H7	G1/4	–	56	SD205A-11.8-56-12R1	118	73	45	71	12
11,908	15/32	12 H6/12 H7	–	–	56	SD205A-04688-221-0472R1	118	73	45	71	12
12,0	–	–	M14	–	56	SD205A-12.0-56-12R1	118	73	45	71	12
12,25	–	–	–	–	56	SD205A-12.25-56-14R1	124	79	45	77	14
12,3	–	–	–	–	56	SD205A-12.3-56-14R1	124	79	45	77	14
12,5	–	–	MF14X1,5	–	56	SD205A-12.5-56-14R1	124	79	45	77	14
12,7	1/2	–	–	–	56	SD205A-05000-221-0551R1	124	79	45	77	14

* For further information regarding reaming (see page 317) and threading (see page 249).
For intermediate diameters see the Custom Design software.

Seco Feedmax™ – SD205A

Drilling depth ~ 5 x D

Cylindrical shank DIN 6537A



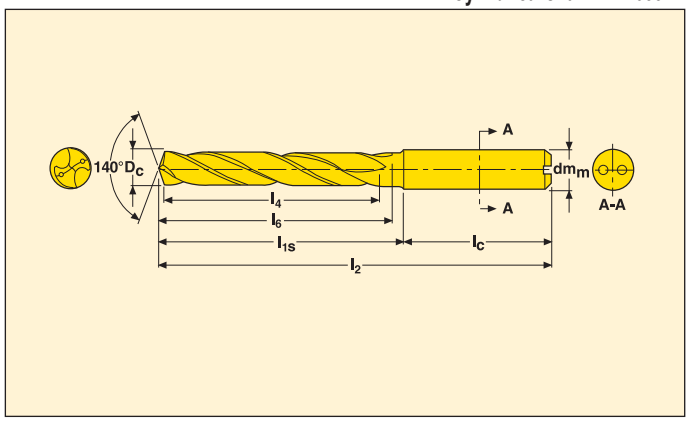

- Internal coolant
- For cutting and machining data see pages 124-125
- Coating: TiAlN + TiN
- Hole tolerance: IT 8-9

D_c m7 (mm)	D_c m7 (inch)	Reamer size*	Tap thread type	Forming tap	l_4	Part No.	Dimensions in mm				
							l_2	l_{1s}	l_c	l_6	dm_m h6
12,8	–	13 H6/13 H7	MF14X1,25	–	56	SD205A-12.8-56-14R1	124	79	45	77	14
13,0	–	–	MF14X1	–	56	SD205A-13.0-56-14R1	124	79	45	77	14
13,1	–	–	–	M14	59	SD205A-13.1-59-14R1	124	79	45	77	14
13,3	–	–	–	–	59	SD205A-13.3-59-14R1	124	79	45	77	14
13,40	–	–	–	–	59	SD205A-13.40-59-14R1	124	79	45	77	14
13,492	17/32	–	–	–	59	SD205A-05312-232-0551R1	124	79	45	77	14
13,5	–	–	–	–	59	SD205A-13.5-59-14R1	124	79	45	77	14
13,55	–	–	–	–	59	SD205A-13.55-59-14R1	124	79	45	77	14
13,7	–	–	–	–	59	SD205A-13.7-59-14R1	124	79	45	77	14
13,8	–	14 H6/14 H7	–	–	59	SD205A-13.8-59-14R1	124	79	45	77	14
13,891	35/64	–	–	–	59	SD205A-05469-232-0551R1	124	79	45	77	14
14,0	–	–	–	–	59	SD205A-14.0-59-14R1	124	79	45	77	14
14,2	–	–	–	–	60	SD205A-14.2-60-16R1	133	85	48	83	16
14,25	–	–	–	–	60	SD205A-14.25-60-16R1	133	85	48	83	16
14,288	9/16	–	–	–	60	SD205A-05625-236-0630R1	133	85	48	83	16
14,5	–	–	–	–	60	SD205A-14.5-60-16R1	133	85	48	83	16
14,7	–	–	–	–	60	SD205A-14.7-60-16R1	133	85	48	83	16
14,8	–	15 H6/15 H7	–	–	60	SD205A-14.8-60-16R1	133	85	48	83	16
15,0	–	–	MF16X1	–	60	SD205A-15.0-60-16R1	133	85	48	83	16
15,10	–	–	–	M16	62	SD205A-15.10-62-16R1	133	85	48	83	16
15,25	–	–	–	–	62	SD205A-15.25-62-16R1	133	85	48	83	16
15,30	–	–	–	–	62	SD205A-15.30-62-16R1	133	85	48	83	16
15,5	–	–	M18	–	62	SD205A-15.5-62-16R1	133	85	48	83	16
15,7	–	–	–	–	62	SD205A-15.7-62-16R1	133	85	48	83	16
15,8	–	16 H6/16 H7	–	–	62	SD205A-15.8-62-16R1	133	85	48	83	16
15,875	5/8	16 H6/16 H7	–	–	62	SD205A-06250-244-0630R1	133	85	48	83	16
16,0	–	–	–	–	62	SD205A-16.0-62-16R1	133	85	48	83	16
16,25	–	–	–	–	64	SD205A-16.25-64-18R1	143	95	48	93	18
16,5	–	–	MF18X1,5	–	64	SD205A-16.5-64-18R1	143	95	48	93	18
16,669	21/32	–	–	–	64	SD205A-06563-252-0709R1	143	95	48	93	18
16,7	–	–	–	–	64	SD205A-16.7-64-18R1	143	95	48	93	18
16,8	–	17 H6/17 H7	–	–	64	SD205A-16.8-64-18R1	143	95	48	93	18
17,0	–	–	MF18X1	–	64	SD205A-17.0-64-18R1	143	95	48	93	18
17,463	11/16	–	–	–	66	SD205A-06875-260-0709R1	143	95	48	93	18
17,5	–	–	M20	–	66	SD205A-17.5-66-18R1	143	95	48	93	18
17,8	–	18 H6/18 H7	–	–	66	SD205A-17.8-66-18R1	143	95	48	93	18
18,0	–	–	–	–	66	SD205A-18.0-66-18R1	143	95	48	93	18
18,5	–	–	MF20X1,5	–	71	SD205A-18.5-71-20R1	153	103	50	101	20
18,8	–	19 H6/19 H7	–	–	71	SD205A-18.8-71-20R1	153	103	50	101	20
19,0	–	–	G1/2/MF20X1	–	71	SD205A-19.0-71-20R1	153	103	50	101	20
19,05	3/4	–	–	–	71	SD205A-19.05-71-20R1	153	103	50	101	20
19,8	–	20 H6/20 H7	–	–	71	SD205A-19.8-71-20R1	153	103	50	101	20
20,0	–	–	–	–	71	SD205A-20.0-71-20R1	153	103	50	101	20

* For further information regarding reaming (see page 317) and threading (see page 249).
For intermediate diameters see the Custom Design software.

Intermediate diameters – drilling depth ~ 5 x D

Cylindrical shank DIN 6537A



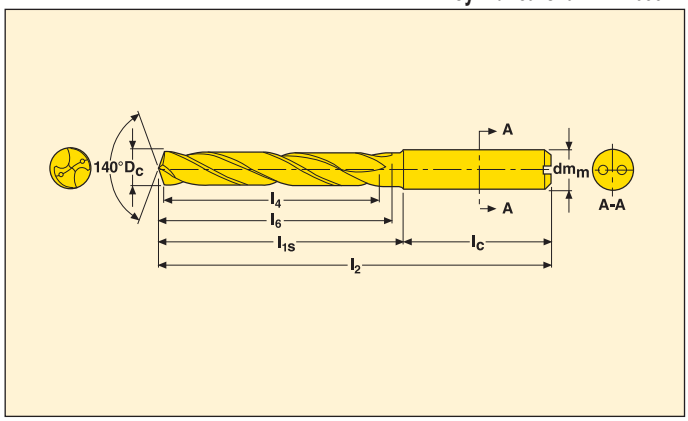

- Internal coolant
- For cutting and machining data see pages 124-125
- Coating: TiAlN + TiN
- Hole tolerance: IT 8-9”

D_c	l_4	Part No.	Dimensions in mm				
			l_2	l_{1s}	l_c	l_6	dm_m h6
2,00-2,30	12	SD205A-x.xx-12-4R1	46	18	28	15	4
2,31-2,60	13	SD205A-x.xx-13-4R1	50	22	28	18	4
2,61-2,99	15	SD205A-x.xx-15-4R1	50	22	28	21	4
3,00-3,75	21	SD205A-x.xx-21-6R1	66	30	36	26	6
3,76-4,75	27	SD205A-x.xx-27-6R1	74	38	36	34	6
4,76-6,00	32	SD205A-x.xx-32-6R1	82	46	36	44	6
6,01-6,70	35	SD205A-x.xx-35-8R1	91	55	36	53	8
6,71-7,50	40	SD205A-x.xx-40-8R1	91	55	36	53	8
7,51-8,00	42	SD205A-x.xx-42-8R1	91	55	36	53	8
8,01-8,50	42	SD205A-x.xx-42-10R1	103	63	40	61	10
8,51-9,50	45	SD205A-x.xx-45-10R1	103	63	40	61	10
9,51-10,00	48	SD205A-x.xx-48-10R1	103	63	40	61	10
10,01-10,50	48	SD205A-xx.xx-48-12R1	118	73	45	71	12
10,51-12,00	56	SD205A-xx.xx-56-12R1	118	73	45	71	12
12,01-13,00	56	SD205A-xx.xx-56-14R1	124	79	45	77	14
13,01-14,00	59	SD205A-xx.xx-59-14R1	124	79	45	77	14
14,01-15,00	60	SD205A-xx.xx-60-16R1	133	85	48	83	16
15,01-16,00	62	SD205A-xx.xx-62-16R1	133	85	48	83	16
16,01-17,00	64	SD205A-xx.xx-64-18R1	143	95	48	93	18
17,01-18,00	66	SD205A-xx.xx-66-18R1	143	95	48	93	18
18,01-20,00	71	SD205A-xx.xx-71-20R1	153	103	50	101	20

The drills are available in ∅ increments of 0,01 mm. Fill in required cutting ∅ instead of -xx.xx- according to the ordering example.
Cutting ∅ tolerance is equal to m7 unless otherwise specified. Ordering example for ∅ 11,3 mm: SD205A-11.3-56-12R1.
Also available for intermediate diameters in the Custom Design software.

Seco Feedmax™ – SD205A

Drilling depth ~ 5 x D

Whistle Notch shank DIN 6537B



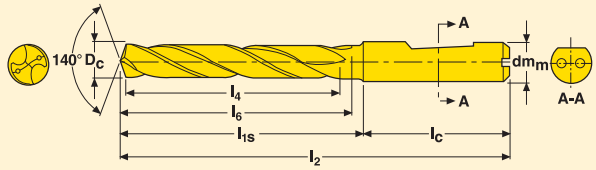

- Internal coolant
- For cutting and machining data see pages 124-125
- Coating: TiAlN + TiN
- Hole tolerance: IT 8-9

D_c m7 (mm)	D_c m7 (inch)	Reamer size*	Tap thread type	Forming tap	l_4	Part No.	Dimensions in mm				
							l_2	l_{1s}	l_c	l_6	dm_m h6
4,0	–	–	–	–	27	**SD205A-4.0-27-6R5**	74	38	36	34	6
4,1	–	–	UNF10-32	–	27	**SD205A-4.1-27-6R5**	74	38	36	34	6
4,2	–	–	M5	–	27	**SD205A-4.2-27-6R5**	74	38	36	34	6
4,3	–	–	–	–	27	**SD205A-4.3-27-6R5**	74	38	36	34	6
4,4	–	–	–	–	27	**SD205A-4.4-27-6R5**	74	38	36	34	6
4,5	–	–	UNC12-24/MF5X0,5	–	27	**SD205A-4.5-27-6R5**	74	38	36	34	6
4,6	–	–	–	–	27	**SD205A-4.6-27-6R5**	74	38	36	34	6
4,7	–	–	–	–	27	**SD205A-4.7-27-6R5**	74	38	36	34	6
4,8	–	5 H6/5 H7	–	MF5	32	**SD205A-4.8-32-6R5**	82	46	36	44	6
4,9	–	5 H6/5 H7	–	–	32	**SD205A-4.9-32-6R5**	82	46	36	44	6
5,0	–	–	M6	–	32	**SD205A-5.0-32-6R5**	82	46	36	44	6
5,1	–	–	UNC1/4-20	–	32	**SD205A-5.1-32-6R5**	82	46	36	44	6
5,2	–	–	MF6X0,75	–	32	**SD205A-5.2-32-6R5**	82	46	36	44	6
5,3	–	–	–	–	32	**SD205A-5.3-32-6R5**	82	46	36	44	6
5,4	–	–	–	–	32	**SD205A-5.4-32-6R5**	82	46	36	44	6
5,5	–	–	UNF1/4-28	–	32	**SD205A-5.5-32-6R5**	82	46	36	44	6
5,6	–	–	–	–	32	**SD205A-5.6-32-6R5**	82	46	36	44	6
5,7	–	–	–	–	32	**SD205A-5.7-32-6R5**	82	46	36	44	6
5,8	–	6 H6/6 H7	–	–	32	**SD205A-5.8-32-6R5**	82	46	36	44	6
5,9	–	6 H6/6 H7	–	–	32	**SD205A-5.9-32-6R5**	82	46	36	44	6
6,0	–	–	M7	–	32	**SD205A-6.0-32-6R5**	82	46	36	44	6
6,1	–	–	NPTF1/16	–	32	**SD205A-6.1-32-6R5**	82	46	36	44	6
6,2	–	–	–	–	35	**SD205A-6.2-35-8R5**	91	55	36	53	8
6,3	–	–	–	–	35	**SD205A-6.3-35-8R5**	91	55	36	53	8
6,4	–	–	–	–	35	**SD205A-6.4-35-8R5**	91	55	36	53	8
6,5	–	–	–	–	35	**SD205A-6.5-35-8R5**	91	55	36	53	8
6,6	–	–	UNC5/16-18	–	35	**SD205A-6.6-35-8R5**	91	55	36	53	8
6,7	–	–	–	–	35	**SD205A-6.7-35-8R5**	91	55	36	53	8
6,8	–	7 H6/7 H7	M8	–	40	**SD205A-6.8-40-8R5**	91	55	36	53	8
6,9	–	7 H6/7 H7	UNF5/16-24	–	40	**SD205A-6.9-40-8R5**	91	55	36	53	8
7,0	–	–	MF8X1	–	40	**SD205A-7.0-40-8R5**	91	55	36	53	8
7,1	–	–	–	–	40	**SD205A-7.1-40-8R5**	91	55	36	53	8
7,2	–	–	MF8X0,75	–	40	**SD205A-7.2-40-8R5**	91	55	36	53	8
7,3	–	–	–	–	40	**SD205A-7.3-40-8R5**	91	55	36	53	8
7,4	–	–	–	–	40	**SD205A-7.4-40-8R5**	91	55	36	53	8
7,5	–	–	–	–	40	**SD205A-7.5-40-8R5**	91	55	36	53	8
7,6	–	–	–	–	42	**SD205A-7.6-42-8R5**	91	55	36	53	8
7,7	–	–	–	–	42	**SD205A-7.7-42-8R5**	91	55	36	53	8
7,8	–	8 H6/8 H7	–	–	42	**SD205A-7.8-42-8R5**	91	55	36	53	8
7,9	–	8 H6/8 H7	–	–	42	**SD205A-7.9-42-8R5**	91	55	36	53	8
8,0	–	–	UNC3/8-16	–	42	**SD205A-8.0-42-8R5**	91	55	36	53	8
8,1	–	–	–	–	42	**SD205A-8.1-42-10R5**	103	63	40	61	10

* For further information regarding reaming (see page 317) and threading (see page 249).
For intermediate diameters see the Custom Design software.

Drilling depth ~ 5 x D

Whistle Notch shank DIN 6537B



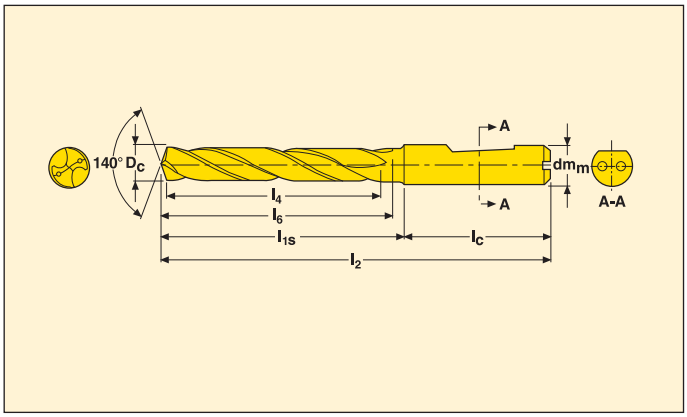

- Internal coolant
- For cutting and machining data see pages 124-125
- Coating: TiAlN + TiN
- Hole tolerance: IT 8-9

D_c m7 (mm)	D_c m7 (inch)	Reamer size*	Tap thread type	Forming tap	l_4	Part No.	Dimensions in mm				
							l_2	l_{1s}	l_c	l_6	dm_m h6
8,2	–	–	–	–	42	SD205A-8.2-42-10R5	103	63	40	61	10
8,3	–	–	–	–	42	SD205A-8.3-42-10R5	103	63	40	61	10
8,4	–	–	NPT1/8/NPTF1/8	–	42	SD205A-8.4-42-10R5	103	63	40	61	10
8,5	–	–	M10	–	42	SD205A-8.5-42-10R5	103	63	40	61	10
8,6	–	–	–	–	45	SD205A-8.6-45-10R5	103	63	40	61	10
8,7	–	–	–	–	45	SD205A-8.7-45-10R5	103	63	40	61	10
8,8	–	9 H6/9 H7	G1/8/MF10X1,25	–	45	SD205A-8.8-45-10R5	103	63	40	61	10
8,9	–	9 H6/9 H7	–	–	45	SD205A-8.9-45-10R5	103	63	40	61	10
9,0	–	–	MF10X1	–	45	SD205A-9.0-45-10R5	103	63	40	61	10
9,1	–	–	–	–	45	SD205A-9.1-45-10R5	103	63	40	61	10
9,2	–	–	MF10X0,75	–	45	SD205A-9.2-45-10R5	103	63	40	61	10
9,3	–	–	–	–	45	SD205A-9.3-45-10R5	103	63	40	61	10
9,4	–	–	UNC7/16-14	–	45	SD205A-9.4-45-10R5	103	63	40	61	10
9,5	–	–	–	–	45	SD205A-9.5-45-10R5	103	63	40	61	10
9,6	–	–	–	–	48	SD205A-9.6-48-10R5	103	63	40	61	10
9,7	–	–	–	–	48	SD205A-9.7-48-10R5	103	63	40	61	10
9,8	–	10 H6/10 H7	–	–	48	SD205A-9.8-48-10R5	103	63	40	61	10
9,9	–	10 H6/10 H7	UNF7/16-20	–	48	SD205A-9.9-48-10R5	103	63	40	61	10
10,0	–	–	–	–	48	SD205A-10.0-48-10R5	103	63	40	61	10
10,2	–	–	M12	–	48	SD205A-10.2-48-12R5	118	73	45	71	12
10,5	–	–	MF12X1,5	–	48	SD205A-10.5-48-12R5	118	73	45	71	12
10,7	–	–	–	–	56	SD205A-10.7-56-12R5	118	73	45	71	12
10,8	–	11 H6/11 H7	UNC1/2-13/MF12X1,25	–	56	SD205A-10.8-56-12R5	118	73	45	71	12
11,0	–	–	MF12X1/NPTF1/4	–	56	SD205A-11.0-56-12R5	118	73	45	71	12
11,2	–	–	–	M12	56	SD205A-11.2-56-12R5	118	73	45	71	12
11,3	–	–	–	–	56	SD205A-11.3-56-12R5	118	73	45	71	12
11,5	–	–	UNF1/2-20	–	56	SD205A-11.5-56-12R5	118	73	45	71	12
11,7	–	–	–	–	56	SD205A-11.7-56-12R5	118	73	45	71	12
11,8	–	12 H6/12 H7	G1/4	–	56	SD205A-11.8-56-12R5	118	73	45	71	12
12,0	–	–	M14	–	56	SD205A-12.0-56-12R5	118	73	45	71	12
12,3	–	–	–	–	56	SD205A-12.3-56-14R5	124	79	45	77	14
12,5	–	–	MF14X1,5	–	56	SD205A-12.5-56-14R5	124	79	45	77	14
12,7	–	–	–	–	56	SD205A-12.7-56-14R5	124	79	45	77	14
12,8	–	13 H6/13 H7	MF14X1,25	–	56	SD205A-12.8-56-14R5	124	79	45	77	14
13,0	–	–	MF14X1	–	56	SD205A-13.0-56-14R5	124	79	45	77	14
13,1	–	–	–	M14	59	SD205A-13.1-59-14R5	124	79	45	77	14
13,3	–	–	–	–	59	SD205A-13.3-59-14R5	124	79	45	77	14
13,5	–	–	–	–	59	SD205A-13.5-59-14R5	124	79	45	77	14
13,7	–	–	–	–	59	SD205A-13.7-59-14R5	124	79	45	77	14
13,8	–	14 H6/14 H7	–	–	59	SD205A-13.8-59-14R5	124	79	45	77	14
14,0	–	–	–	–	59	SD205A-14.0-59-14R5	124	79	45	77	14
14,2	–	–	–	–	60	SD205A-14.2-60-16R5	133	85	48	83	16

* For further information regarding reaming (see page 317) and threading (see page 249).
For intermediate diameters see the Custom Design software.

Seco Feedmax™ – SD205A

Drilling depth ~ 5 x D

Whistle Notch shank DIN 6537B



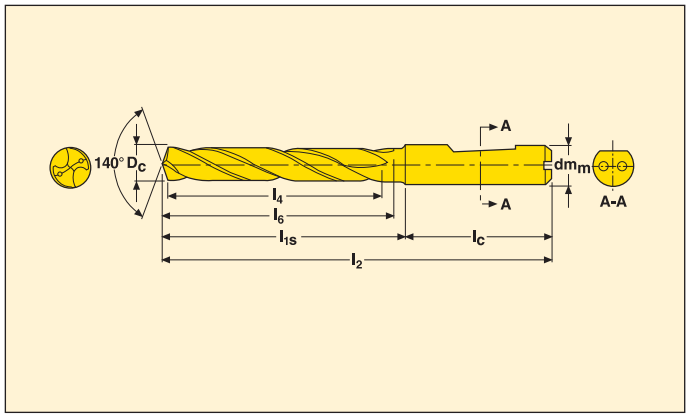

- Internal coolant
- For cutting and machining data see pages 124-125
- Coating: TiAlN + TiN
- Hole tolerance: IT 8-9

D_C m7 (mm)	D_C m7 (inch)	Reamer size*	Tap thread type	Forming tap	l_4	Part No.	Dimensions in mm				
							l_2	l_{1S}	l_C	l_6	dm_m h6
14,5	–	–	MF16X1,5/UNF5/8-18	–	60	**SD205A-14.5-60-16R5**	133	85	48	83	16
14,7	–	–	–	–	60	**SD205A-14.7-60-16R5**	133	85	48	83	16
14,8	–	15 H6/15 H7	–	–	60	**SD205A-14.8-60-16R5**	133	85	48	83	16
15,0	–	–	MF16X1	–	60	**SD205A-15.0-60-16R5**	133	85	48	83	16
15,25	–	–	–	–	62	**SD205A-15.25-62-16R5**	133	85	48	83	16
15,5	–	–	M18	–	62	**SD205A-15.5-62-16R5**	133	85	48	83	16
15,7	–	–	–	–	62	**SD205A-15.7-62-16R5**	133	85	48	83	16
15,8	–	16 H6/16 H7	–	–	62	**SD205A-15.8-62-16R5**	133	85	48	83	16
16,0	–	–	–	–	62	**SD205A-16.0-62-16R5**	133	85	48	83	16
16,5	–	–	MF18X1,5	–	64	**SD205A-16.5-64-18R5**	143	95	48	93	18
16,7	–	–	–	–	64	**SD205A-16.7-64-18R5**	143	95	48	93	18
16,8	–	17 H6/17 H7	–	–	64	**SD205A-16.8-64-18R5**	143	95	48	93	18
17,0	–	–	MF18X1	–	64	**SD205A-17.0-64-18R5**	143	95	48	93	18
17,5	–	–	M20	–	66	**SD205A-17.5-66-18R5**	143	95	48	93	18
18,0	–	–	–	–	66	**SD205A-18.0-66-18R5**	143	95	48	93	18

* For further information regarding reaming (see page 317) and threading (see page 249).
For intermediate diameters see the Custom Design software.

Intermediate diameters – drilling depth ~ 5 x D

Whistle Notch shank DIN 6537B



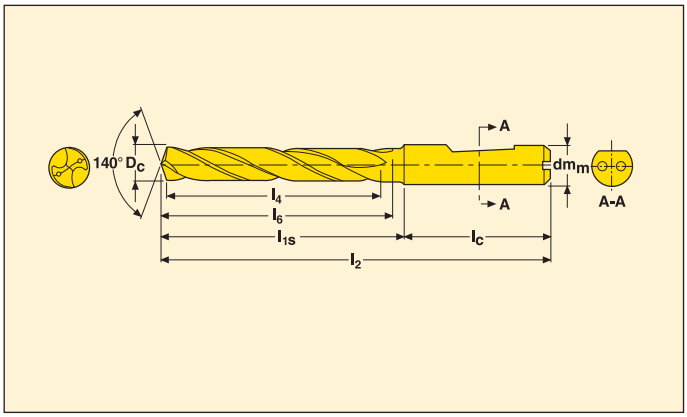

- Internal coolant
- For cutting and machining data see pages 124-125
- Coating: TiAlN + TiN
- Hole tolerance: IT 8-9

D_c	l_4	Part No.	Dimensions in mm				
			l_2	l_{1s}	l_c	l_6	dm_m h6
3,00-3,75	21	**SD205A-x.xx-21-6R5**	66	30	36	26	6
3,76-4,75	27	**SD205A-x.xx-27-6R5**	74	38	36	34	6
4,76-6,00	32	**SD205A-x.xx-32-6R5**	82	46	36	44	6
6,01-6,70	35	**SD205A-x.xx-35-8R5**	91	55	36	53	8
6,71-7,50	40	**SD205A-x.xx-40-8R5**	91	55	36	53	8
7,51-8,00	42	**SD205A-x.xx-42-8R5**	91	55	36	53	8
8,00-8,50	42	**SD205A-x.xx-42-10R5**	103	63	40	61	10
8,51-9,50	45	**SD205A-x.xx-45-10R5**	103	63	40	61	10
9,51-10,00	48	**SD205A-x.xx-48-10R5**	103	63	40	61	10
10,01-10,50	48	**SD205A-xx.xx-48-12R5**	118	73	45	71	12
10,51-12,00	56	**SD205A-xx.xx-56-12R5**	118	73	45	71	12
12,01-13,00	56	**SD205A-xx.xx-56-14R5**	124	79	45	77	14
13,01-14,00	59	**SD205A-xx.xx-59-14R5**	124	79	45	77	14
14,01-15,00	60	**SD205A-xx.xx-60-16R5**	133	85	48	83	16
15,01-16,00	62	**SD205A-xx.xx-62-16R5**	133	85	48	83	16
16,01-17,00	64	**SD205A-xx.xx-64-18R5**	143	95	48	93	18
17,01-18,00	66	**SD205A-xx.xx-66-18R5**	143	95	48	93	18
18,01-20,00	71	**SD205A-xx.xx-71-20R5**	153	103	50	101	20

The drills are available in ∅ increments of 0,01 mm. Fill in required cutting ∅ instead of -xx.xx- according to the ordering example.
Cutting ∅ tolerance is equal to m7 unless otherwise specified. Ordering example for ∅ 11,3 mm: SD205A-11.3-56-12R5.
Also available for intermediate diameters in the Custom Design software.

Seco Feedmax™ – SD206

Drilling depth ~ 6 x D

Cylindrical shank



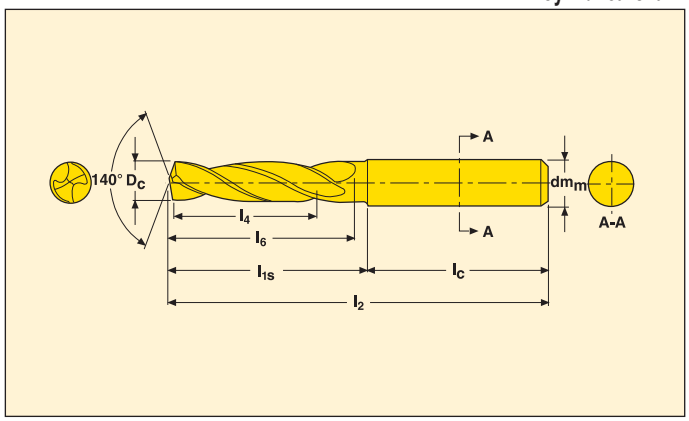

- External coolant
- For cutting and machining data see pages 126
- Coating: TiAlN
- Hole tolerance IT9"

D_c	l_4	Part No.	Dimensions in mm		
			l_2	l_{1s}	dm_m
0,7	4,20	SD206-0.70-4.2-3R1	38	6,00	3
0,8	4,80	SD206-0.80-4.8-3R1	38	6,70	3
0,9	5,40	SD206-0.90-5.4-3R1	38	7,80	3
1,0	6,00	SD206-1.00-6.0-3R1	38	8,00	3
1,1	6,60	SD206-1.10-6.6-3R1	38	8,60	3
1,2	7,20	SD206-1.20-7.2-3R1	38	9,20	3
1,3	7,80	SD206-1.30-7.8-3R1	38	9,80	3
1,4	8,40	SD206-1.40-8.4-3R1	38	10,40	3
1,5	9,00	SD206-1.50-9.0-3R1	38	11,00	3
1,6	9,60	SD206-1.60-9.6-3R1	38	11,60	3
1,7	10,20	SD206-1.70-10.2-3R1	38	12,20	3
1,8	10,80	SD206-1.80-10.8-3R1	38	12,80	3
1,9	11,40	SD206-1.90-11.4-3R1	38	13,40	3
2,0	12,00	SD206-2.00-12.0-3R1	50	14,00	3

Seco Feedmax™ – SD206A

Drilling depth ~ 6 x D

Cylindrical shank



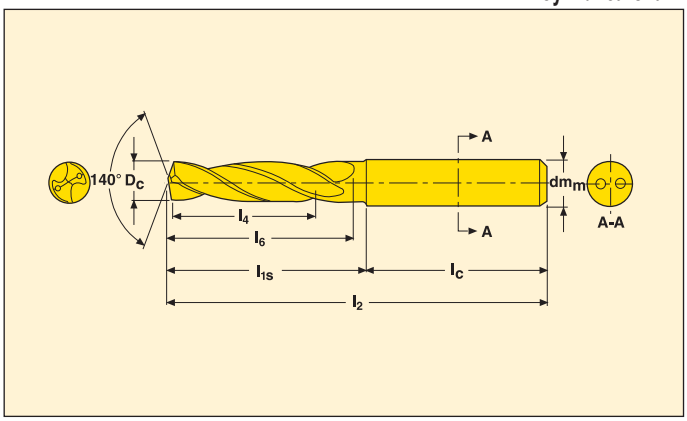

- Internal coolant
- For cutting and machining data see pages 126
- Coating: TiAlN
- Hole tolerance IT9"

D_C	l_4	Part No.	Dimensions in mm		
			l_2	l_{1s}	dm_m
1,0	6,00	**SD206A-1.00-6.0-3R1**	38	8,00	3
1,1	6,60	**SD206A-1.10-6.6-3R1**	38	8,60	3
1,20	7,20	**SD206A-1.20-7.2-3R1**	38	9,20	3
1,30	7,80	**SD206A-1.30-7.8-3R1**	38	9,80	3
1,40	8,40	**SD206A-1.40-8.4-3R1**	38	10,40	3
1,50	9,00	**SD206A-1.50-9.0-3R1**	38	11,00	3
1,60	9,60	**SD206A-1.60-9.6-3R1**	38	11,60	3
1,70	10,20	**SD206A-1.70-10.2-3R1**	38	12,20	3
1,80	10,80	**SD206A-1.80-10.8-3R1**	38	12,80	3
1,90	11,40	**SD206A-1.90-11.4-3R1**	38	13,40	3
2,00	12,00	**SD206A-2.00-12.0-3R1**	50	14,00	3

Seco Feedmax™ – SD207A

Drilling depth ~ 7 x D

Cylindrical shank DIN 6537A



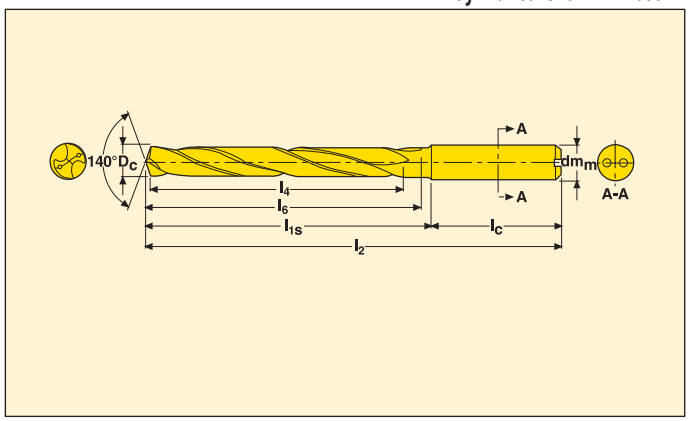

- Internal coolant
- For cutting and machining data see page 127
- Coating: TiAlN + TiN
- Hole tolerance: IT 9

D_c m7 (mm)	D_c m7 (inch)	Reamer size*	Tap thread type	Forming tap	l_4	Part No.	Dimensions in mm				
							l_2	l_{1s}	l_c	l_6	dm_m h6
4,5	–	–	–	–	45	**SD207A-4.5-45-6R1**	94	58	36	56	6
4,8	–	5 H7	–	–	45	**SD207A-4.8-45-6R1**	94	58	36	56	6
5,0	–	–	UNC1/4-20	–	45	**SD207A-5.0-45-6R1**	94	58	36	56	6
5,5	–	–	–	M6	45	**SD207A-5.5-45-6R1**	94	58	36	56	6
5,8	–	6 H6/6 H7	–	–	45	**SD207A-5.8-45-6R1**	94	58	36	56	6
6,0	–	–	NPTF1/16	–	45	**SD207A-6.0-45-6R1**	94	58	36	56	6
6,35	1/4	–	–	–	57	**SD207A-6.35-57-8R1**	110	74	36	67	8
6,5	–	–	UNC5/16-18	–	57	**SD207A-6.5-57-8R1**	110	74	36	67	8
6,8	–	7 H6	M8	–	57	**SD207A-6.8-57-8R1**	110	74	36	67	8
6,9	–	7 H6/7 H7	UNF5/16-24	–	57	**SD207A-6.9-57-8R1**	110	74	36	67	8
7,0	–	–	MF8X1	–	57	**SD207A-7.0-57-8R1**	110	74	36	67	8
7,5	–	–	–	–	57	**SD207A-7.5-57-8R1**	110	74	36	72	8
7,8	–	8 H6/8 H7	–	–	57	**SD207A-7.8-57-8R1**	110	74	36	72	8
8,0	–	–	UNC3/8-16	–	57	**SD207A-8.0-57-8R1**	110	74	36	72	8
8,5	–	–	M10	–	62	**SD207A-8.5-62-10R1**	122	82	40	80	10
8,6	–	–	–	–	62	**SD207A-8.6-62-10R1**	122	82	40	80	10
8,7	–	–	–	–	62	**SD207A-8.7-62-10R1**	122	82	40	80	10
8,8	–	9 H6/9 H7	G1/8/MF10X1,25	–	62	**SD207A-8.8-62-10R1**	122	82	40	80	10
9,0	–	–	MF10X1	–	62	**SD207A-9.0-62-10R1**	122	82	40	80	10
9,5	–	–	–	–	62	**SD207A-9.5-62-10R1**	122	82	40	80	10
9,52	3/8	–	–	–	62	**SD207A-9.52-62-10R1**	122	82	40	80	10
9,75	–	–	–	–	62	**SD207A-9.75-62-10R1**	122	82	40	80	10
9,8	–	10 H6/10 H7	–	–	62	**SD207A-9.8-62-10R1**	122	82	40	80	10
10,0	–	–	–	–	62	**SD207A-10.0-62-10R1**	122	82	40	80	10
10,2	–	–	M12	–	72	**SD207A-10.2-72-12R1**	141	96	45	94	12
10,4	–	–	–	–	72	**SD207A-10.4-72-12R1**	141	96	45	94	12
10,5	–	–	MF12X1,5	–	72	**SD207A-10.5-72-12R1**	141	96	45	94	12
10,8	–	11 H6/11 H7	UNC1/2-13/MF12X1,25	–	72	**SD207A-10.8-72-12R1**	141	96	45	94	12
11,0	–	–	MF12X1/NPTF1/4	–	72	**SD207A-11.0-72-12R1**	141	96	45	94	12
11,5	–	–	UNF1/2-20	–	72	**SD207A-11.5-72-12R1**	141	96	45	94	12
11,8	–	12 H6/12 H7	G1/4	–	72	**SD207A-11.8-72-12R1**	141	96	45	94	12
12,0	–	–	M14	–	72	**SD207A-12.0-72-12R1**	141	96	45	94	12
12,25	–	–	–	–	83	**SD207A-12.25-83-14R1**	155	110	45	108	14
12,5	–	–	MF14X1,5	–	83	**SD207A-12.5-83-14R1**	155	110	45	108	14
12,7	172	–	–	–	83	**SD207A-12.7-83-14R1**	155	110	45	108	14
12,8	–	13 H6/13 H7	MF14X1,25	–	83	**SD207A-12.8-83-14R1**	155	110	45	108	14
13,0	–	–	MF14X1	–	83	**SD207A-13.0-83-14R1**	155	110	45	108	14
13,5	–	–	–	–	83	**SD207A-13.5-83-14R1**	155	110	45	108	14
13,8	–	14 H6/14 H7	–	–	83	**SD207A-13.8-83-14R1**	155	110	45	108	14
14,0	–	–	–	–	83	**SD207A-14.0-83-14R1**	155	110	45	108	14
14,25	–	–	–	–	92	**SD207A-14.25-92-16R1**	171	123	48	121	16
14,5	–	–	MF16X1,5/UNF5/8-18	–	92	**SD207A-14.5-92-16R1**	171	123	48	121	16

* For further information regarding reaming (see page 317) and threading (see page 249).
For intermediate diameters see the Custom Design software.

Seco Feedmax™ – SD207A

Drilling depth ~ 7 x D

Cylindrical shank DIN 6537A



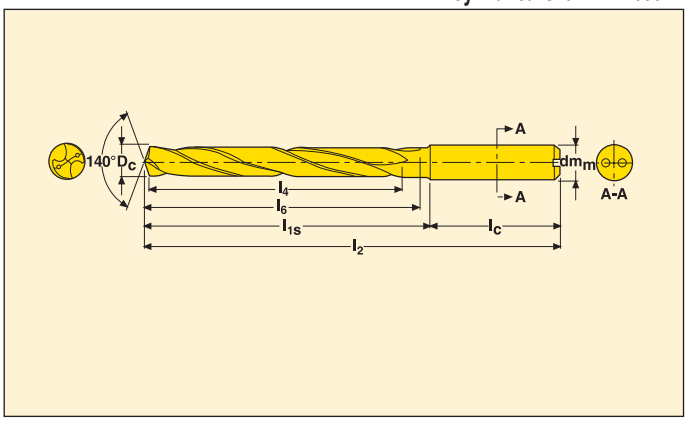

- Internal coolant
- For cutting and machining data see page 127
- Coating: TiAlN + TiN
- Hole tolerance: IT 9

D_c m7 (mm)	D_c m7 (inch)	Reamer size*	Tap thread type	Forming tap	l_4	Part No.	Dimensions in mm				
							l_2	l_{1s}	l_c	l_6	dm_m h6
14,8	–	15 H6/15 H7	–	–	92	**SD207A-14.8-92-16R1**	171	123	48	121	16
15,0	–	–	MF16X1	–	92	**SD207A-15.0-92-16R1**	171	123	48	121	16
15,5	–	–	M18	–	92	**SD207A-15.5-92-16R1**	171	123	48	121	16
15,8	–	16 H6/16 H7	–	–	92	**SD207A-15.8-92-16R1**	171	123	48	121	16
16,0	–	–	–	–	92	**SD207A-16.0-92-16R1**	171	123	48	121	16
16,5	–	–	MF18X1,5	–	103	**SD207A-16.5-103-18R1**	185	137	48	135	18
16,8	–	17 H6/17 H7	–	–	103	**SD207A-16.8-103-18R1**	185	137	48	135	18
17,0	–	–	MF18X1	–	103	**SD207A-17.0-103-18R1**	185	137	48	135	18
17,5	–	–	M20	–	103	**SD207A-17.5-103-18R1**	185	137	48	135	18
17,8	–	18 H6/18 H7	–	–	103	**SD207A-17.8-103-18R1**	185	137	48	135	18
18,0	–	–	–	–	103	**SD207A-18.0-103-18R1**	185	137	48	135	18
18,5	–	–	MF20X1,5	–	112	**SD207A-18.5-112-20R1**	200	150	50	148	20
18,8	–	19 H6/19H7	–	–	112	**SD207A-18.8-112-20R1**	200	150	50	148	20
19,0	–	–	G1/2/MF20X1	–	112	**SD207A-19.0-112-20R1**	200	150	50	148	20
19,5	–	–	M20	–	112	**SD207A-19.5-112-20R1**	200	150	50	148	20
19,8	–	20 H6/10 H7	–	–	112	**SD207A-19.8-112-20R1**	200	150	50	148	20
20,0	–	–	–	–	112	**SD207A-20.0-112-20R1**	200	150	50	148	20

* For further information regarding reaming (see page 317) and threading (see page 249).
For intermediate diameters see the Custom Design software.

Intermediate diameters – drilling depth ~ 7 x D

Cylindrical shank DIN 6537A



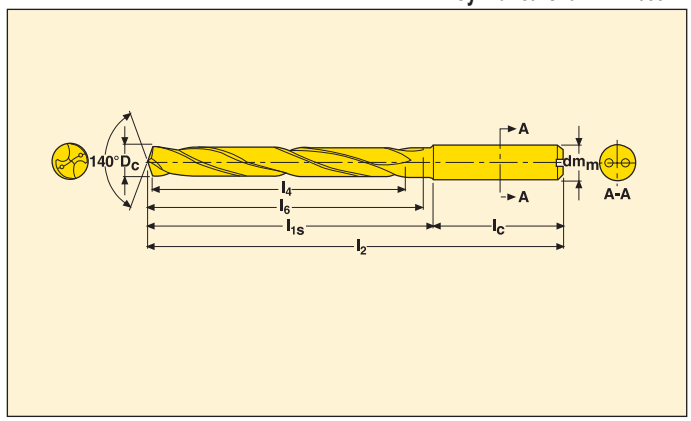

- Internal coolant
- For cutting and machining data see page 127
- Coating: TiAlN + TiN
- Hole tolerance: IT 9

D_c	l_4	Part No.	Dimensions in mm				
			l_2	l_{1s}	l_c	l_6	dm_m h6
4,50-5,49	45	**SD207A-x.xx-45-6R1**	94	58	36	56	6
5,50-6,00	45	**SD207A-x.xx-45-6R1**	94	58	36	56	6
6,01-7,00	57	**SD207A-x.xx-57-8R1**	110	74	36	67	8
7,01-8,00	57	**SD207A-x.xx-57-8R1**	110	74	36	72	8
8,01-10,00	62	**SD207A-x.xx-62-10R1**	122	82	40	80	10
10,01-12,00	72	**SD207A-x.xx-72-12R1**	141	96	45	94	12
12,01-14,00	83	**SD207A-xx.xx-83-14R1**	155	110	45	108	14
14,01-16,00	92	**SD207A-xx.xx-92-16R1**	171	123	48	121	16
16,01-18,00	103	**SD207A-xx.xx-103-18R1**	185	137	48	135	18
18,01-20,00	112	**SD207A-xx.xx-112-20R1**	200	150	50	148	20

The drills are available in ∅ increments of 0,01 mm. Fill in required cutting ∅ instead of -xx.xx- according to the ordering example.
Cutting ∅ tolerance is equal to m7 unless otherwise specified. Ordering example for ∅ 11,3 mm: SD207A-11.3-72-12R1.
Also available for intermediate diameters in the Custom Design software.

Seco Feedmax™ – SD216A

Drilling depth ~ 16 x D

Cylindrical shank DIN 6537A



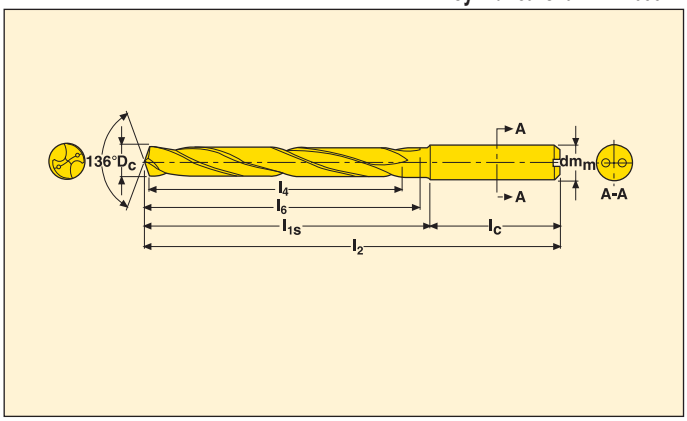

- Internal coolant
- For cutting and machining data see page 127
- Coating: TiAlN + TiN
- Hole tolerance: IT 9”

D_c m7 (mm)	D_c m7 (inch)	l_4	Part No.	Dimensions in mm				
				l_2	l_{1s}	l_c	l_6	dm_m h6
3	–	50	SD216A-3.0-50-4R1	88	60	28	56	4
3,5	–	60	SD216A-3.5-60-4R1	99	71	28	67	4
4	–	60	SD216A-4.0-60-4R1	99	71	28	67	4
4,5	–	70	SD216A-4.5-70-6R1	117	81	36	79	6
5	–	90	SD216A-5.0-90-6R1	142	106	36	103	6
5,5	–	90	SD216A-5.5-90-6R1	142	106	36	103	6
6	–	90	SD216A-6.0-90-6R1	142	106	36	103	6
6,35	1/4	120	SD216A-6.35-120-8R1	177	141	36	137	8
6,5	–	120	SD216A-6.5-120-8R1	177	141	36	137	8
7	–	120	SD216A-7.0-120-8R1	177	141	36	137	8
7,5	–	120	SD216A-7.5-120-8R1	177	141	36	137	8
8	–	120	SD216A-8.0-120-8R1	177	141	36	137	8
8,5	–	150	SD216A-8.5-150-10R1	216	176	40	172	10
9	–	150	SD216A-9.0-150-10R1	216	176	40	172	10
9,5	–	150	SD216A-9.5-150-10R1	216	176	40	172	10
9,52	3/8	150	SD216A-9.52-150-10R1	216	176	40	172	10
10	–	150	SD216A-10.0-150-10R1	216	176	40	172	10
10,5	–	180	SD216A-10.5-180-12R1	256	211	45	207	12
11	–	180	SD216A-11.0-180-12R1	256	211	45	207	12
11,5	–	180	SD216A-11.5-180-12R1	256	211	45	207	12
12	–	180	SD216A-12.0-180-12R1	256	211	45	207	12

For intermediate diameters see the Custom Design software.”

Seco Feedmax™ – SD216A

Drilling depth ~ 16 x D

Cylindrical shank DIN 6537A



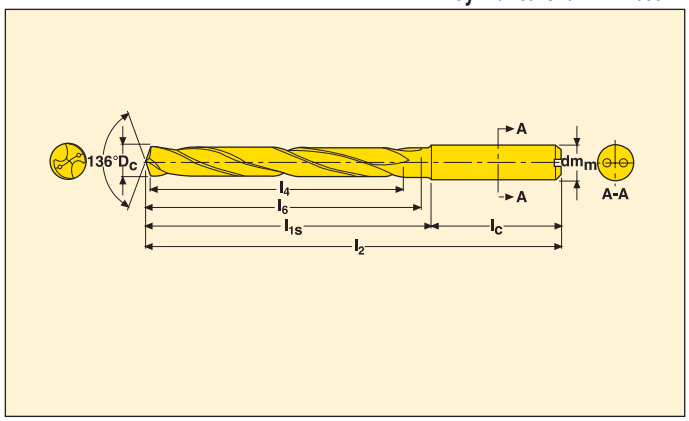

- Internal coolant
- For cutting and machining data see page 127
- Coating: TiAlN + TiN
- Hole tolerance: IT 9”

D_c	l_4	Part No.	Dimensions in mm				
			l_2	l_{1s}	l_c	l_6	dm_m h6
3,00-3,30	50	**SD216A-x.xx-50-4R1**	88	60	28	56	4
3,31-4,00	60	**SD216A-x.xx-60-4R1**	99	71	28	67	4
4,00-4,75	70	**SD216A-x.xx-70-6R1**	117	81	36	79	6
4,76-6,10	90	**SD216A-x.xx-90-6R1**	142	106	36	103	6
6,00-8,10	120	**SD216A-x.xx-120-8R1**	177	141	36	137	8
8,00-10,10	152	**SD216A-x.xx-152-10R1**	216	176	40	172	10
10,00-12,10	180	**SD216A-x.xx-180-12R1**	256	211	45	207	12
12,00-14,10	212	**SD216A-x.xx-212-14R1**	285	240	45	236	14

For intermediate diameters see the Custom Design software.”

Seco Feedmax™ – SD230A

Drilling depth ~ 30 x D

Cylindrical shank DIN 6537A



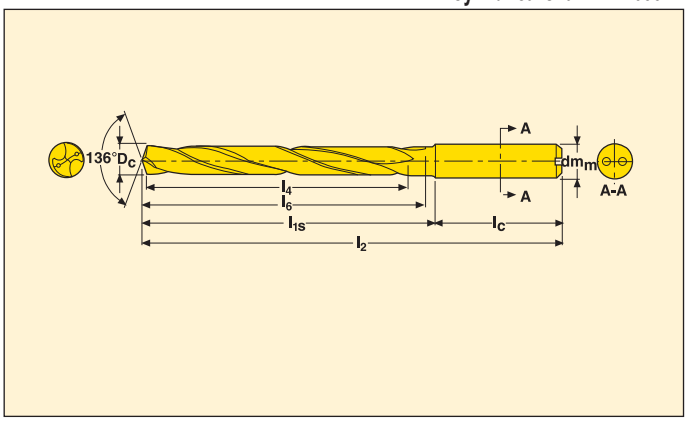

- Internal coolant
- For cutting and machining data see page 128
- Coating: TiAlN + TiN
- Hole tolerance: IT 9”

D_c m7 (mm)	D_c m7 (inch)	l_4	Part No.	Dimensions in mm				
				l_2	l_{1s}	l_c	l_6	dm_m h6
4	–	112	SD230A-4.0-112-4R1	151	123	28	119	4
4,5	–	135	SD230A-4.5-135-6R1	185	149	36	145	6
5	–	170	SD230A-5.0-170-6R1	220	184	36	180	6
5,5	–	170	SD230A-5.5-170-6R1	220	184	36	180	6
6	–	170	SD230A-6.0-170-6R1	220	184	36	180	6
6,35	1/4	225	SD230A-02500-886-0315R1	279	243	36	239	8
6,5	–	225	SD230A-6.5-225-8R1	279	243	36	239	8
7	–	225	SD230A-7.0-225-8R1	279	243	36	239	8
7,5	–	225	SD230A-7.5-225-8R1	279	243	36	239	8
7,938	5/16	225	SD230A-03125-886-0315R1	279	243	36	239	8
8	–	225	SD230A-8.0-225-8R1	279	243	36	239	8
8,5	–	285	SD230A-8.5-285-10R1	346	306	40	302	10
9	–	285	SD230A-9.0-285-10R1	346	306	40	302	10
9,5	–	285	SD230A-9.5-285-10R1	346	306	40	302	10
9,525	3/8	285	SD230A-03750-1122-0394R1	346	306	40	302	10
10	–	285	SD230A-10.0-285-10R1	346	306	40	302	10

For intermediate diameters see the Custom Design software.

Seco Feedmax™ – SD230A

Drilling depth ~ 30 x D

Cylindrical shank DIN 6537A



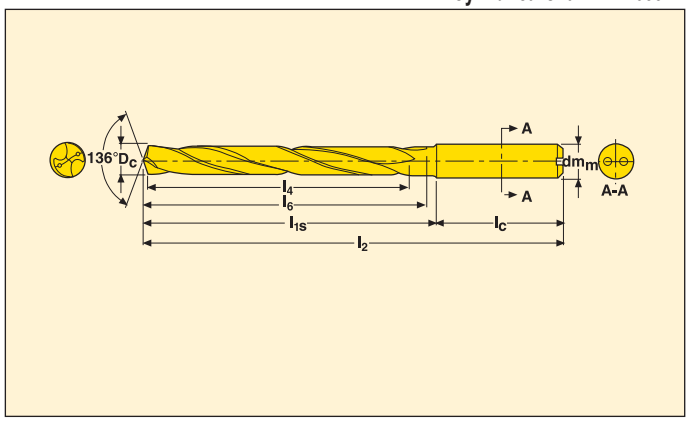

- Internal coolant
- For cutting and machining data see page 128
- Coating: TiAlN + TiN
- Hole tolerance: IT 9”

D_c	l_4	Part No.	Dimensions in mm				
			l_2	l_{1s}	l_c	l_6	dm_m h6
3,00-3,30	95	**SD230A-x.xx-105-4R1**	133	105	28	101	4
3,31-4,00	112	**SD230A-x.xx-112-4R1**	151	123	28	119	4
4,01-4,75	135	**SD230A-x.xx-135-6R1**	185	149	36	145	6
4,76-6,00	170	**SD230A-x.xx-170-6R1**	220	184	36	180	6
6,01-8,00	225	**SD230A-x.xx-225-8R1**	279	243	36	239	8
8,01-10,00	285	**SD230A-x.xx-285-10R1**	346	306	40	302	10
10,01-12,00	300	**SD230A-x.xx-300-12R1**	369	324	45	320	12

For intermediate diameters see the Custom Design software.

Seco Feedmax™ – SD245A

Drilling depth ~ 5 X D

Cylindrical shank DIN 6537A



- Internal coolant
- For cutting and machining data see page 128
- Coating: TiAlN + TiN
- Hole tolerance: IT 8.”

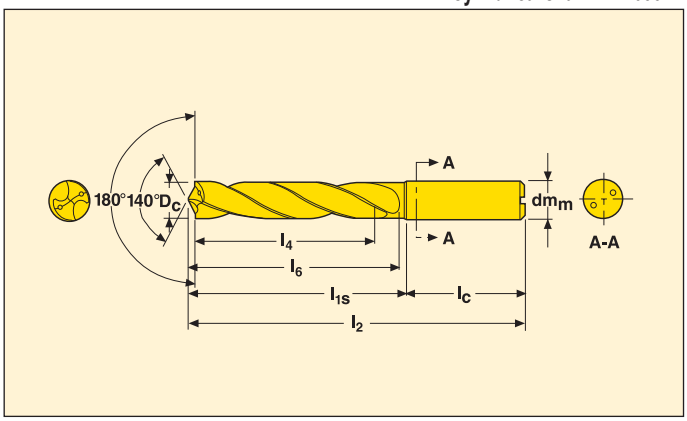

D_c m7 (mm)	D_c m7 (inch)	l_4	Part No.	Dimensions in mm				
				l_2	l_{1s}	l_c	l_6	dm_m h6
5,0	–	32	SD245A-5.0-32-6R1	82	46	36	44	6
6,0	–	32	SD245A-6.0-32-6R1	82	46	36	44	6
6,35	1/4	35	SD245A-02500-138-0315R1	91	55	36	53	8
6,5	–	35	SD245A-6.5-35-8R1	91	55	36	53	8
6,747	17/64	40	SD245A-02656-157-0315R1	91	55	36	53	8
6,8	–	40	SD245A-6.8-40-8R1	91	55	36	53	8
7,0	–	40	SD245A-7.0-40-8R1	91	55	36	53	8
7,144	9/32	40	SD245A-02813-157-0315R1	91	55	36	53	8
7,5	–	40	SD245A-7.5-40-8R1	91	55	36	53	8
7,938	5/16	42	SD245A-03125-165-0315R1	91	55	36	53	8
8,0	–	42	SD245A-8.0-42-8R1	91	55	36	53	8
8,5	–	42	SD245A-8.5-42-10R1	103	63	40	61	10
9,0	–	45	SD245A-9.0-45-10R1	103	63	40	61	10
9,5	–	45	SD245A-9.5-45-10R1	103	63	40	61	10
9,525	3/8	48	SD245A-03750-189-0394R1	103	63	40	61	10
10,0	–	48	SD245A-10.0-48-10R1	103	63	40	61	10
10,2	–	48	SD245A-10.2-48-12R1	118	73	45	71	12
10,319	13/32	48	SD245A-04063-189-0472R1	118	73	45	71	12
10,5	–	48	SD245A-10.5-48-12R1	118	73	45	71	12
11,0	–	56	SD245A-11.0-56-12R1	118	73	45	71	12
11,113	7/16	56	SD245A-04375-221-0472R1	118	73	45	71	12
11,5	–	56	SD245A-11.5-56-12R1	118	73	45	71	12
12,0	–	56	SD245A-12.0-56-12R1	118	73	45	71	12
12,5	–	56	SD245A-12.5-56-14R1	124	79	45	77	14
12,7	1/2	56	SD245A-0500-221-0551R1	124	79	45	77	14
13,0	–	56	SD245A-13.0-56-14R1	124	79	45	77	14
13,494	17/32	59	SD245A-05312-232-0551R1	124	79	45	77	14
13,5	–	59	SD245A-13.5-59-14R1	124	79	45	77	14
14,0	–	59	SD245A-14.0-59-14R1	124	79	45	77	14

For intermediate diameters see Custom Design software.

Seco Feedmax™ – SD265A

Drilling depth ~ 5 X D

Cylindrical shank DIN 6537A



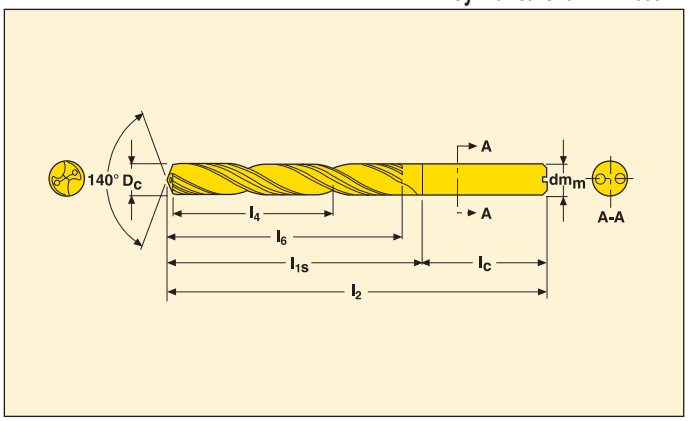

- Internal coolant
- For cutting and machining data see pages 129
- Coating: TiAlN + TiN
- Hole tolerance: IT 7

D_c	Drill dia D_c (inch)	l_4	Part No.	Dimensions in mm				
				l_2	l_{1s}	l_c	l_6	dm_m
6,006	–	32	**SD265A-6.006-32-6R1**	82	46	36	44	6
8,008	–	42	**SD265A-8.008-42-8R1**	91	55	36	53	8
10,008	–	48	**SD265A-10.008-48-10R1**	103	63	40	61	10
12,009	–	56	**SD265A-12.009-56-12R1**	118	73	45	71	12
14,009	–	59	**SD265A-14.009-59-14R1**	124	79	45	77	14
16,009	–	62	**SD265A-16.009-62-16R1**	133	85	48	83	16
6,35	1/4	35	**SD265A-02497-138-0315R1**	91	55	36	53	8
7,938	5/16	42	**SD265A-03122-165-0315R1**	91	55	36	53	8
9,525	3/8	48	**SD265A-03747-189-0394R1**	103	63	40	61	10
12,7	1/2	56	**SD265A-04997-221-0551R1**	124	79	45	77	14

For intermediate diameters see Custom Design software.
Dowel pin standard ANSI / ASME B18.8.2-1995.

Chamfer drills – M4 - M16 Thread

Cylindrical shank DIN 6537A



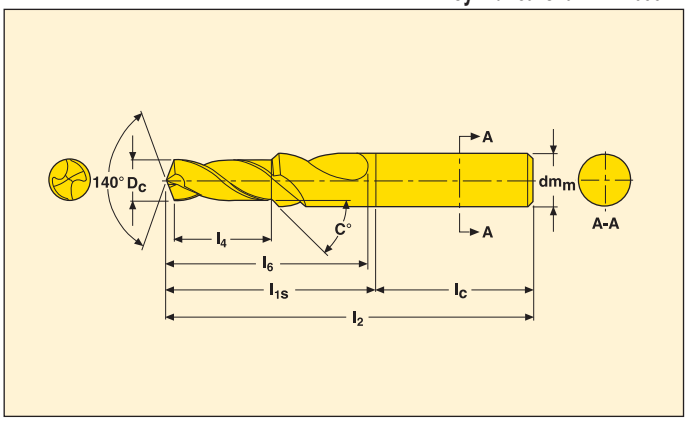

- Internal coolant
- For cutting and machining data see pages 122-123
- Coating: TiAlN + TiN
- Hole tolerance: IT 8-9”

Tap thread type	D_c	Tap thread type	l_4	Part No.	Dimensions in mm				
					l_2	l_{1s}	l_c	l_6	dm_m h6
Normal pitch Metric thread	3,3	M4	11,4	SD203A-C45-3.3-11.4-6R1	66	26	36	20	6
	3,4	M4	11,4	SD203A-C45-3.4-11.4-6R1	66	26	36	20	6
	4,2	M5	13,6	SD203A-C45-4.2-13.6-6R1	66	30	36	24	6
	4,3	M5	13,6	SD203A-C45-4.3-13.6-6R1	66	30	36	24	6
	5,0	M6	16,5	SD203A-C45-5.0-16.5-8R1	79	43	36	28	8
	5,1	M6	16,5	SD203A-C45-5.1-16.5-8R1	79	43	36	28	8
	6,8	M8	21,0	SD203A-C45-6.8-21-10R1	89	49	40	34	10
	6,9	M8	21,0	SD203A-C45-6.9-21-10R1	89	49	40	34	10
	8,5	M10	25,5	SD203A-C45-8.5-25.5-12R1	102	57	45	47	12
	8,7	M10	25,5	SD203A-C45-8.7-25.5-12R1	102	57	45	47	12
	10,2	M12	30,0	SD203A-C45-10.2-30.0-14R1	107	62	45	55	14
	10,4	M12	30,0	SD203A-C45-10.4-30.0-14R1	107	62	45	55	14
	12,0	M14	34,5	SD203A-C45-12.0-34.5-16R1	115	70	45	60	16
	12,25	M14	34,5	SD203A-C45-12.25-34.5-16R1	115	70	45	60	16
	14,0	M16	38,5	SD203A-C45-14.0-38.5-18R1	123	75	48	65	18
	14,25	M16	38,5	SD203A-C45-14.25-38.5-18R1	123	75	48	65	18
Fine pitch Metric thread	7,0	M8x1.0	21,0	SD203A-C45-7.0-21-10R1	89	49	40	34	10
	9,0	M10x1.0	25,5	SD203A-C45-9.0-25.5-12R1	102	57	45	47	12
	10,5	M12x1.5	34,5	SD203A-C45-10.5-30.0-14R1	107	62	45	55	14
	12,5	M14x1.5	34,5	SD203A-C45-12.5-34.5-16R1	115	70	45	60	16
	14,5	M16x1.5	38,5	SD203A-C45-14.5-38.5-18R1	123	75	48	65	18

Chamfer drills – M4 - M16 Thread

Whistle Notch shank DIN 6537B



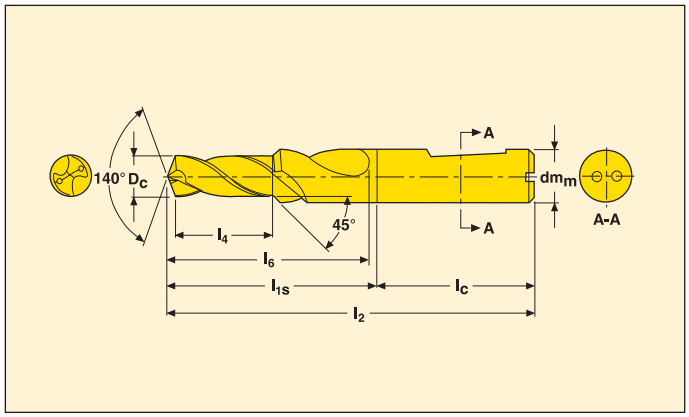

- Internal coolant
- For cutting and machining data see pages 122-123
- Coating: TiAlN + TiN
- Hole tolerance: IT 8-9”

Tap thread type	D_c	Tap thread type	l_4	Part No.	Dimensions in mm				
					l_2	l_{1s}	l_c	l_6	dm_m h6
Normal pitch Metric thread	3,3	M4	11,4	**SD203A-C45-3.3-11.4-6R5**	66	26	36	20	6
	3,4	M4	11,4	**SD203A-C45-3.4-11.4-6R5**	66	26	36	20	6
	4,2	M5	13,6	**SD203A-C45-4.2-13.6-6R5**	66	30	36	24	6
	4,3	M5	13,6	**SD203A-C45-4.3-13.6-6R5**	66	30	36	24	6
	5,0	M6	16,5	**SD203A-C45-5.0-16.5-8R5**	79	43	36	28	8
	5,1	M6	16,5	**SD203A-C45-5.1-16.5-8R5**	79	43	36	28	8
	6,8	M8	21,0	**SD203A-C45-6.8-21.0-10R5**	89	49	40	34	10
	6,9	M8	21,0	**SD203A-C45-6.9-21.0-10R5**	89	49	40	34	10
	8,5	M10	25,5	**SD203A-C45-8.5-25.5-12R5**	102	57	45	47	12
	8,7	M10	25,5	**SD203A-C45-8.7-25.5-12R5**	102	57	45	47	12
	10,2	M12	30,0	**SD203A-C45-10.2-30.0-14R5**	107	62	45	55	14
	10,4	M12	30,0	**SD203A-C45-10.4-30.0-14R5**	107	62	45	55	14
	12,0	M14	34,5	**SD203A-C45-12.0-34.5-16R5**	115	70	45	60	16
	12,25	M14	34,5	**SD203A-C45-12.25-34.5-16R5**	115	70	45	60	16
	14,0	M16	38,5	**SD203A-C45-14.0-38.5-18R5**	123	75	48	65	18
	14,25	M16	38,5	**SD203A-C45-14.25-38.5-18R5**	123	75	48	65	18
Fine pitch Metric thread	7,0	M8x1.0	21,0	**SD203A-C45-7.0-21.0-10R5**	89	49	40	34	10
	9,0	M10x1.0	25,5	**SD203A-C45-9.0-25.5-12R5**	102	57	45	47	12
	10,5	M12x1.5	34,5	**SD203A-C45-10.5-30.0-14R5**	107	62	45	55	14
	12,5	M14x1.5	34,5	**SD203A-C45-12.5-34.5-16R5**	115	70	45	60	16
	14,5	M16x1.5	38,5	**SD203A-C45-14.5-38.5-18R5**	123	75	48	65	18

Chamfer drills – SD203 Intermediate diameters



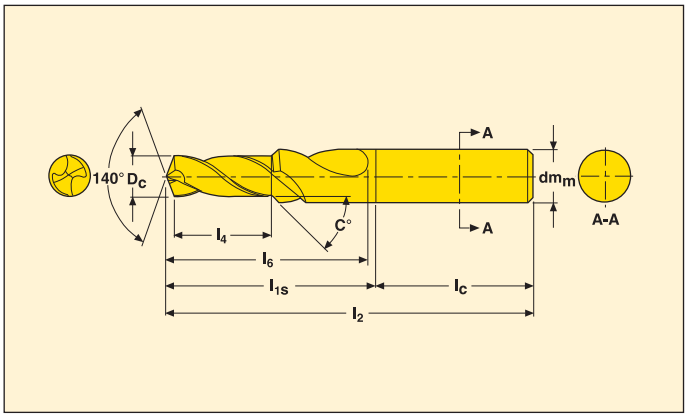

- External coolant
- For cutting and machining data see pages 122-123
- Coating: TiAlN + TiN
- Hole tolerance: IT 8-9”

D_c	l_4	Part No.	c	Dimensions in mm			
				dm_m	l_2	l_c	Shank
3,00-5,50	5-15	SD203-Cxx-x.xx-xx.xx-18Rx	30-75	6	66	36	R1/R5
4,76-7,50	8-26	SD203-Cxx-x.xx-xx.xx-18Rx	30-75	8	79	36	R1/R5
6,00-9,50	5-28	SD203-Cxx-x.xx-xx.xx-18Rx	30-75	10	89	40	R1/R5
7,20-11,50	5-32	SD203-Cxx-x.xx-xx.xx-18Rx	30-75	12	102	45	R1/R5
8,40-13,50	5-33	SD203-Cxx-x.xx-xx.xx-18Rx	30-75	14	107	45	R1/R5
10,00-15,50	5-34	SD203-Cxx-x.xx-xx.xx-18Rx	30-75	16	115	48	R1/R5
12,00-17,50	5-39	SD203-Cxx-x.xx-xx.xx-18Rx	30-75	18	123	48	R1/R5
14,00-19,50	5-42	SD203-Cxx-x.xx-xx.xx-18Rx	30-75	20	131	50	R1/R5

For intermediate diameters see the Custom Design software.

Chamfer module



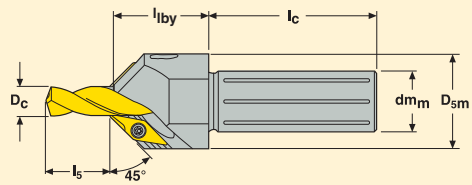

Part No.	D_c	SD203 l_5 (min-max)	SD203A l_5 (min-max)	SD205A l_5 (min-max)	SD207A l_5 (min-max)	Max chamfer depth (mm)	Dimensions in mm			
							l_{2by}	D_{5m}	l_c	dm_m
SD200-C45-6R1	4,01-6,10	4-17	4-17	10-27	30-45	2,8	25	21	41	12,0
SD200-C45-8R1	6,01-8,00	15-27	15-27	24-35	42-57	2,8	25	25	44,5	16,0
SD200-C45-10R1	8,01-10,00	17-31	17-31	34-48	47-62	2,8	25	25	44,5	16,0
SD200-C45-12R1	10,01-12,00	21-36	21-36	40-56	57-72	2,8	25	28	46,5	20,0
SD200-C45-14R1	12,01-14,00	22-37	22-37	43-59	68-83	2,8	25	30	46,5	20,0
SD200-C45-16R1	14,01-16,00	23-39	23-39	44-60	76-92	2,8	34	32	53	25,0

Spare Parts, Parts included in delivery

For drill dia (mm)	Insert screw	Locking screw	Insert key	Locking key	Cassette
					
	Insert	Module	Insert	Module	Module
4,00 - 16,00	CO2205-T07P	SH3040	T07P-2	H1.5-2D	SD200-3x7.3

Insert

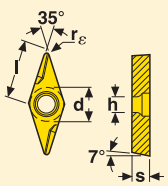

Tolerances:
d = ±0,025
s = ±0,07
r_ε = ±0,10

Size	Dimensions in mm				
	d	l	s	h	r_ε
C45	5,556	9,000	2,500	2,900	0,200
Part No. SD200-C45	T400D				

Chamfer module mounting instructions

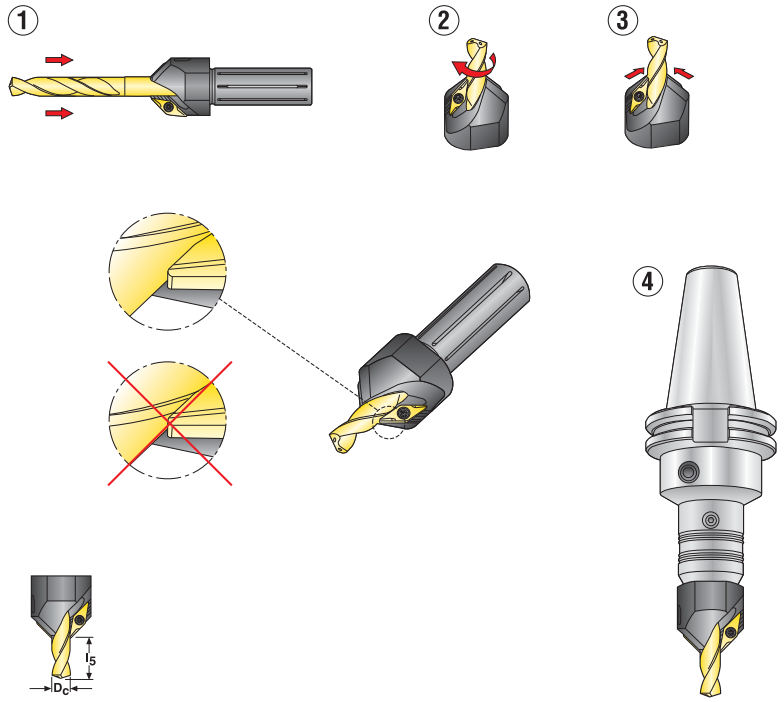

D_c		l_4 drilling depth (min-max)							
		SD203		SD203A		SD205A		SD207A	
(mm)	(inch)	(mm)	(inch)	(mm)	(inch)	(mm)	(inch)	(mm)	(inch)
4,00-4,75	.157-.187	4-17	.157-.669	4-17	.157-.669	10-27	.394-1.063	30-45	1.181-1.772
4,76-6,00	.187-.236	6-20	.236-.787	6-20	.236-.787	18-32	.709-1.260	30-45	1.181-1.772
6,01-8,00	.241-.315	15-27	.590-1.063	15-27	.590-1.063	28-42	1.102-1.653	42-57	1.653-2.244
8,01-10,00	.315-.394	17-31	.669-1.220	17-31	.669-1.220	34-48	1.338-1.890	47-62	1.850-2.441
10,01-12,00	.394-.472	21-36	.826-1.417	21-36	.826-1.417	40-56	1.575-2.205	57-72	2.244-2.835
12,01-14,00	.473-.551	22-37	.866-1.457	22-37	.866-1.457	43-59	1.693-2.323	68-83	2.677-3.268
14,01-16,00	.552-.630	23-39	.906-1.535	23-39	.906-1.535	44-60	1.732-2.362	76-92	2.992-3.622

To be used with cylindrical shank only (R1).

Maximum chamfer depth

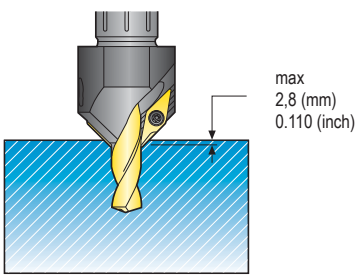

For difficult to machine materials

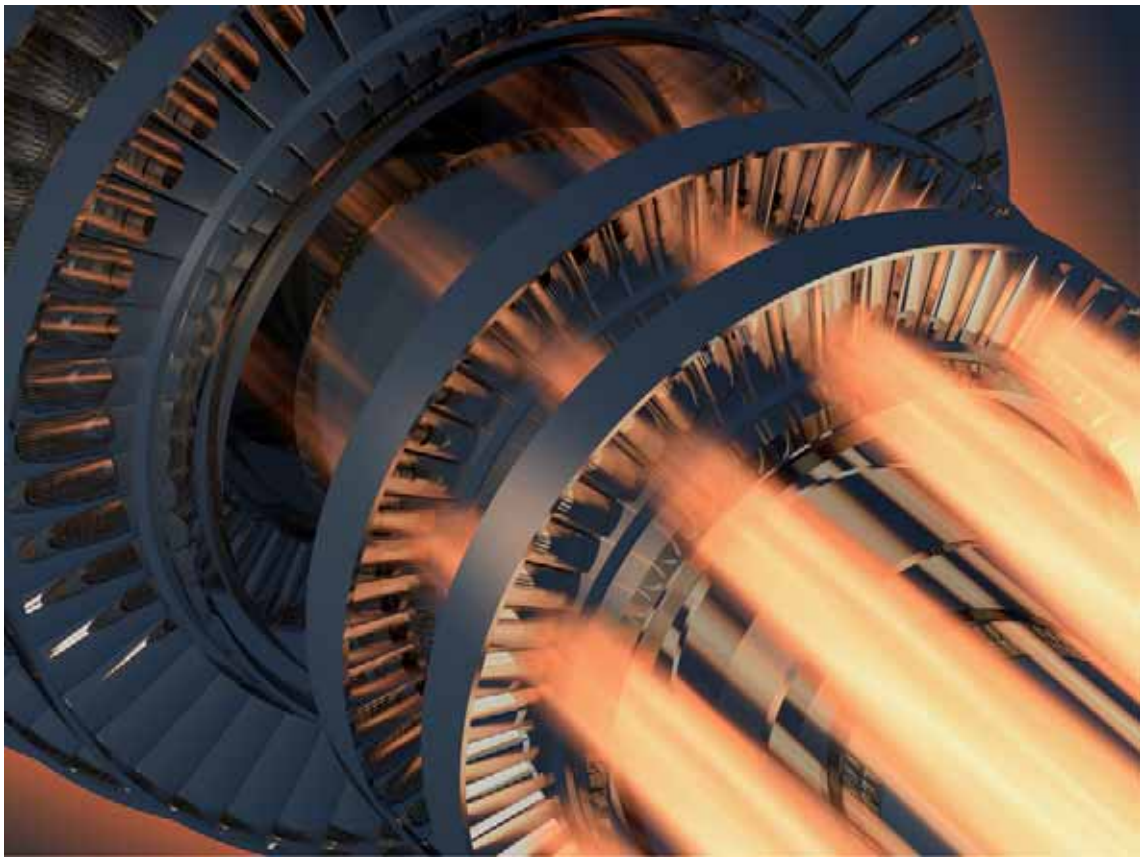

Intermediate diameters – drilling depth ~ 3 x D

Cylindrical shank DIN 6537A



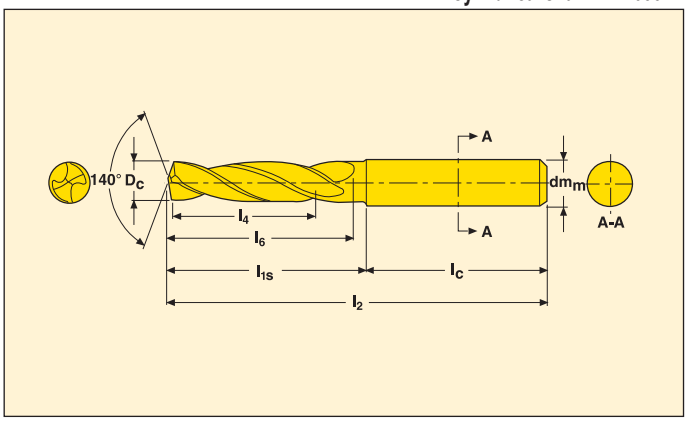

- External coolant
- For cutting and machining data see page 121
- Coating: TiAlN + TiN
- Hole tolerance: IT 8-9

D_c	l_4	Part No.	Dimensions in mm				
			l_2	l_{1s}	l_c	l_6	dm_m h6
3,00-3,40	14	SD203-x.xx-14-6R1-M	62	26	36	20	6
3,41-3,75	15	SD203-x.xx-15-6R1-M	62	26	36	20	6
3,76-4,20	17	SD203-x.xx-17-6R1-M	66	30	36	24	6
4,21-4,50	18	SD203-x.xx-18-6R1-M	66	30	36	24	6
4,51-4,75	18	SD203-x.xx-18-6R1-M	66	30	36	26	6
4,76-5,20	20	SD203-x.xx-20-6R1-M	66	30	36	28	6
5,21-6,00	21	SD203-x.xx-21-6R1-M	66	30	36	28	6
6,00-6,60	23	SD203-x.xx-23-8R1-M	79	43	36	34	8
6,61-7,00	25	SD203-x.xx-25-8R1-M	79	43	36	34	8
7,01-7,50	25	SD203-x.xx-25-8R1-M	79	43	36	41	8
7,51-8,00	27	SD203-x.xx-27-8R1-M	79	43	36	41	8
8,01-8,60	27	SD203-x.xx-27-10R1-M	89	49	40	47	10
8,61-9,50	29	SD203-x.xx-29-10R1-M	89	49	40	47	10
9,51-10,00	31	SD203-x.xx-31-10R1-M	89	49	40	47	10
10,01-10,50	31	SD203-xx.xx-31-12R1-M	102	57	45	55	12
10,51-11,80	33	SD203-xx.xx-33-12R1-M	102	57	45	55	12
11,81-12,00	36	SD203-xx.xx-36-12R1-M	102	57	45	55	12
12,01-13,00	36	SD203-xx.xx-36-14R1-M	107	62	45	60	14
13,01-14,00	37	SD203-xx.xx-37-14R1-M	107	62	45	60	14
14,01-15,00	38	SD203-xx.xx-38-16R1-M	115	67	48	65	16
15,01-16,00	39	SD203-xx.xx-39-16R1-M	115	67	48	65	16
16,01-17,00	40	SD203-xx.xx-40-18R1-M	123	75	48	73	18
17,01-18,00	41	SD203-xx.xx-41-18R1-M	123	75	48	73	18
18,01-20,00	49	SD203-xx.xx-49-20R1-M	131	81	50	79	20

The drills are available in ∅ increments of 0,01 mm. Fill in required cutting ∅ instead of -xx.xx- according to the ordering example.
Cutting ∅ tolerance is equal to m7 unless otherwise specified. Ordering example for ∅ 11,3 mm: SD203-11.3-33-12R1-M.
Also available for intermediate diameters in the Custom Design software.

Seco Feedmax™ – SD203A,- M

Drilling depth ~ 3 x D

Cylindrical shank DIN 6537A



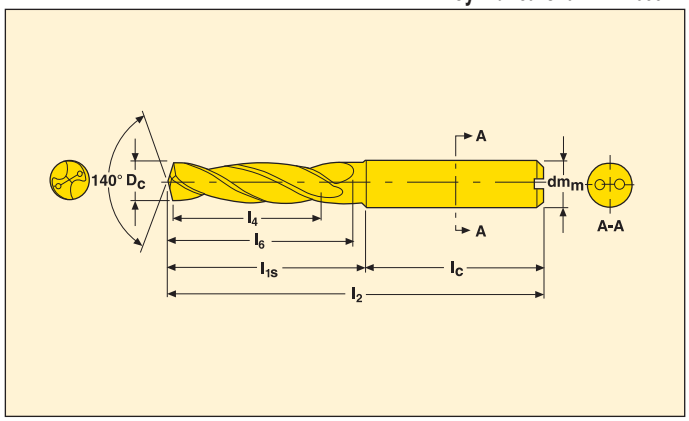

- Internal coolant
- For cutting and machining data see pages 122-123
- Coating: TiAlN + TiN
- Hole tolerance: IT 8-9

D_c m7 (mm)	D_c m7 (inch)	Reamer size*	l_4	Part No.	Dimensions in mm				
					l_2	l_{1s}	l_c	l_6	dm_m h6
3,0	–	–	14	SD203A-3.0-14-6R1-M	62	26	36	20	6
3,1	–	–	14	SD203A-3.1-14-6R1-M	62	26	36	20	6
3,3	–	–	14	SD203A-3.3-14-6R1-M	62	26	36	20	6
3,4	–	–	14	SD203A-3.4-14-6R1-M	62	26	36	20	6
3,5	–	–	15	SD203A-3.5-15-6R1-M	62	26	36	20	6
3,9	–	4 H7	17	SD203A-3.9-17-6R1-M	66	30	36	24	6
4,0	–	–	17	SD203A-4.0-17-6R1-M	66	30	36	24	6
4,2	–	–	17	SD203A-4.2-17-6R1-M	66	30	36	24	6
4,3	–	–	18	SD203A-4.3-18-6R1-M	66	30	36	24	6
4,5	–	–	18	SD203A-4.5-18-6R1-M	66	30	36	24	6
4,763	3/16	–	20	SD203A-01875-079-0236R1-M	66	30	36	28	6
4,8	–	–	20	SD203A-4.8-20-6R1-M	66	30	36	28	6
4,9	–	5 H7	20	SD203A-4.9-20-6R1-M	66	30	36	28	6
5,0	–	–	20	SD203A-5.0-20-6R1-M	66	30	36	28	6
5,5	–	–	20	SD203A-5.5-21-6R1-M	66	30	36	28	6
5,558	7/32	–	20	SD203A-02188-083-0236R1-M	66	30	36	28	6
5,6	–	–	21	SD203A-5.6-21-6R1-M	66	30	36	28	6
5,9	–	6 H6/6 H7	21	SD203A-5.9-21-6R1-M	66	30	36	28	6
6,0	–	–	21	SD203A-6.0-21-6R1-M	66	30	36	28	6
6,35	1/4	–	23	SD203A-02500-091-0315R1-M	79	43	36	34	8
6,5	–	–	23	SD203A-6.5-23-8R1-M	79	43	36	34	8
6,6	–	–	23	SD203A-6.6-23-8R1-M	79	43	36	34	8
6,746	17/64	–	25	SD203A-02656-098-0315R1-M	79	43	36	34	8
6,8	–	–	25	SD203A-6.8-25-8R1-M	79	43	36	34	8
6,9	–	7 H6/6 H7	25	SD203A-6.9-25-8R1-M	79	43	36	34	8
7,0	–	–	25	SD203A-7.0-25-8R1-M	79	43	36	34	8
7,145	9/32	–	25	SD203A-02813-098-0315R1-M	79	43	36	41	8
7,2	–	–	25	SD203A-7.2-25-8R1-M	79	43	36	41	8
7,3	–	–	25	SD203A-7.3-25-8R1-M	79	43	36	41	8
7,5	–	–	25	SD203A-7.5-25-8R1-M	79	43	36	41	8
7,6	–	–	27	SD203A-7.6-27-8R1-M	79	43	36	41	8
7,8	–	–	27	SD203A-7.8-27-8R1-M	79	43	36	41	8
7,938	5/16	–	27	SD203A-03125-106-0315R1-M	79	43	36	41	8
8,0	–	–	27	SD203A-8.0-27-8R1-M	79	43	36	41	8
8,5	–	–	27	SD203A-8.5-27-10R1-M	89	49	40	47	10
8,733	11/32	–	29	SD203A-03438-114-0394R1-M	89	49	40	47	10
8,8	–	–	29	SD203A-8.8-29-10R1-M	89	49	40	47	10
8,9	–	9 H6/9 H7	29	SD203A-8.9-29-10R1-M	89	49	40	47	10
9,0	–	–	29	SD203A-9.0-29-10R1-M	89	49	40	47	10
9,129	23/64	–	29	SD203A-03594-114-0394R1-M	89	49	40	47	10
9,2	–	–	29	SD203A-9.2-29-10R1-M	89	49	40	47	10

* For further information regarding reaming (see page 317).
For intermediate diameters see the Custom Design software.

Seco Feedmax™ – SD203A, - M

Drilling depth ~ 3 x D

Cylindrical shank DIN 6537A



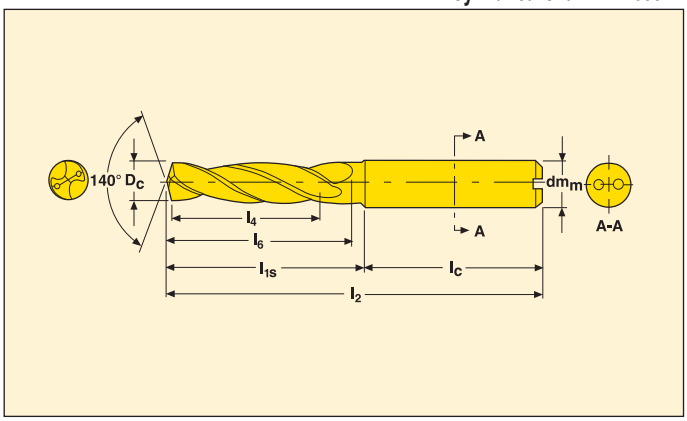

- Internal coolant
- For cutting and machining data see pages 122-123
- Coating: TiAlN + TiN
- Hole tolerance: IT 8-9

D_c m7 (mm)	D_c m7 (inch)	Reamer size*	l_4	Part No.	Dimensions in mm				
					l_2	l_{1s}	l_c	l_6	dm_m h6
9,3	–	–	29	SD203A-9.3-29-10R1-M	89	49	40	47	10
9,5	–	–	29	SD203A-9.5-29-10R1-M	89	49	40	47	10
9,525	3/8	–	29	SD203A-03750-122-0394R1-M	89	49	40	47	10
9,8	–	–	31	SD203A-9.8-31-10R1-M	89	49	40	47	10
9,9	–	10 H6/10 H7	31	SD203A-9.9-31-10R1-M	89	49	40	47	10
10,0	–	–	31	SD203A-10.0-31-10R1-M	89	49	40	47	10
10,2	–	–	31	SD203A-10.2-31-12R1-M	102	57	45	55	12
10,32	13/32	–	31	SD203A-04063-122-0472R1-M	102	57	45	55	12
10,4	–	–	31	SD203A-10.4-31-12R1-M	102	57	45	55	12
10,5	–	–	31	SD203A-10.5-31-12R1-M	102	57	45	55	12
10,716	27/64	–	33	SD203A-04219-130-0472R1-M	102	57	45	55	12
10,8	–	–	33	SD203A-10.8-33-12R1-M	102	57	45	55	12
10,9	–	11 H6/11 H7	33	SD203A-10.9-33-12R1-M	102	57	45	55	12
11,0	–	–	33	SD203A-11.0-33-12R1-M	102	57	45	55	12
11,113	7/16	–	33	SD203A-04375-130-0472R1-M	102	57	45	55	12
11,5	–	–	33	SD203A-11.5-33-12R1-M	102	57	45	55	12
11,8	–	–	33	SD203A-11.8-33-12R1-M	102	57	45	55	12
11,908	15/32	12 H6/12 H7	36	SD203A-04688-142-0472R1-M	102	57	45	55	12
12,0	–	–	36	SD203A-12.0-36-12R1-M	102	57	45	55	12
12,25	–	–	36	SD203A-12.25-36-14R1-M	107	62	45	60	14
12,3	–	–	36	SD203A-12.3-36-14R1-M	107	62	45	60	14
12,5	–	–	36	SD203A-12.5-36-14R1-M	107	62	45	60	14
12,7	1/2	–	36	SD203A-05000-142-0551R1-M	107	62	45	60	14
12,9	–	13 H6/13 H7	36	SD203A-12.9-36-14R1-M	107	62	45	60	14
13,0	–	–	36	SD203A-13.0-36-14R1-M	107	62	45	60	14
13,5	–	–	37	SD203A-13.5-37-14R1-M	107	62	45	60	14
13,891	35/64	14 H6/14 H7	37	SD203A-05469-146-0551R1-M	107	62	45	60	14
14,0	–	–	37	SD203A-14.0-37-14R1-M	107	62	45	60	14
14,25	–	–	38	SD203A-14.25-38-16R1-M	115	67	48	65	16

* For further information regarding reaming (see page 317).
For intermediate diameters see the Custom Design software.

Seco Feedmax™ – SD203A,- M

Intermediate diameters – drilling depth ~ 3 x D

Cylindrical shank DIN 6537A



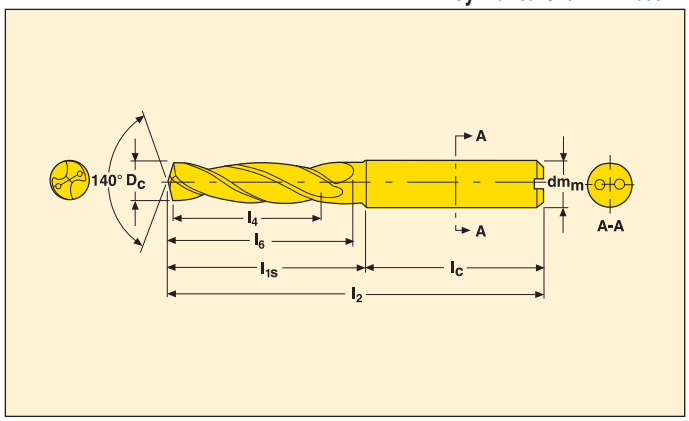

- Internal coolant
- For cutting and machining data see pages 122-123
- Coating: TiAlN + TiN
- Hole tolerance: IT 8-9

D_c	l_4	Part No.	Dimensions in mm				
			l_2	l_{1s}	l_c	l_6	dm_m h6
3,00-3,40	14	SD203A-x.xx-14-6R1-M	62	26	36	20	6
3,41-3,75	15	SD203A-x.xx-15-6R1-M	62	26	36	20	6
3,76-4,20	17	SD203A-x.xx-17-6R1-M	66	30	36	24	6
4,21-4,50	18	SD203A-x.xx-18-6R1-M	66	30	36	24	6
4,51-4,75	18	SD203A-x.xx-18-6R1-M	66	30	36	26	6
4,76-5,20	20	SD203A-x.xx-20-6R1-M	66	30	36	28	6
5,21-6,00	21	SD203A-x.xx-21-6R1-M	66	30	36	24	6
6,01-6,60	23	SD203A-x.xx-23-8R1-M	79	43	36	34	8
6,61-7,00	25	SD203A-x.xx-25-8R1-M	79	43	36	34	8
7,01-7,50	25	SD203A-x.xx-25-8R1-M	79	43	36	41	8
7,51-8,00	27	SD203A-x.xx-27-8R1-M	79	43	36	41	8
8,01-8,60	27	SD203A-x.xx-27-10R1-M	89	49	40	47	10
8,61-9,50	29	SD203A-x.xx-29-10R1-M	89	49	40	47	10
9,51-10,00	31	SD203A-x.xx-31-10R1-M	89	49	40	47	10
10,01-10,50	31	SD203A-xx.xx-31-12R1-M	102	57	45	55	12
10,51-11,80	33	SD203A-xx.xx-33-12R1-M	102	57	45	55	12
11,81-12,00	36	SD203A-xx.xx-36-12R1-M	102	57	45	55	12
12,01-13,00	36	SD203A-xx.xx-36-14R1-M	107	62	45	60	14
13,01-14,00	37	SD203A-xx.xx-37-14R1-M	107	62	45	60	14
14,01-15,00	38	SD203A-xx.xx-38-16R-M	115	67	48	65	16
15,01-16,00	39	SD203A-xx.xx-39-16R-M	115	67	48	65	16
16,01-17,00	40	SD203A-xx.xx-40-18R1-M	123	75	48	73	18
17,01-18,00	41	SD203A-xx.xx-41-18R1-M	123	75	48	73	18
18,01-20,00	49	SD203A-xx.xx-49-20R1-M	131	81	50	79	20

The drills are available in ∅ increments of 0,01 mm. Fill in required cutting ∅ instead of -xx.xx- according to the ordering example.
Cutting ∅ tolerance is equal to m7 unless otherwise specified. Ordering example for ∅ 11,3 mm: SD203A-11.3-33-12R1-M.
Also available for intermediate diameters in the Custom Design software.

Seco Feedmax™ – SD205A, - M

Drilling depth ~ 5 x D

Cylindrical shank DIN 6537A



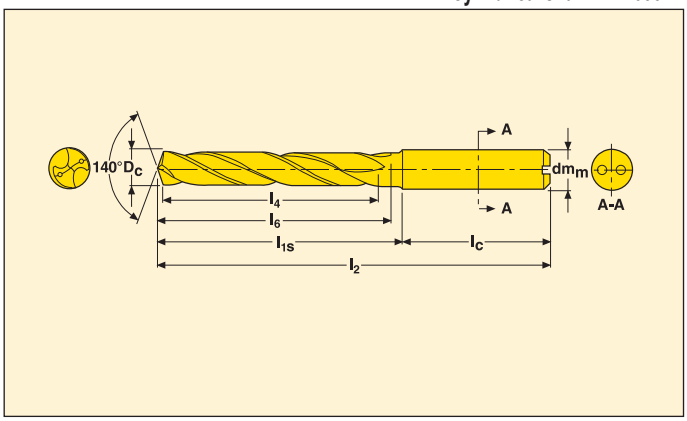

- Internal coolant
- For cutting and machining data see pages 124-125
- Coating: TiAlN + TiN
- Hole tolerance: IT 8-9

D_c m7 (mm)	D_c m7 (inch)	Reamer size*	l_4	Part No.	Dimensions in mm				
					l_2	l_{1s}	l_c	l_6	dm_m h6
3,0	–	–	21	SD205A-3.0-21-6R1-M	66	30	36	26	6
3,4	–	–	21	SD205A-3.4-21-6R1-M	66	30	36	26	6
3,5	–	–	21	SD205A-3.5-21-6R1-M	66	30	36	26	6
3,9	–	4 H7	27	SD205A-3.9-27-6R1-M	74	38	36	34	6
4,0	–	–	27	SD205A-4.0-27-6R1-M	74	38	36	34	6
4,3	–	–	27	SD205A-4.3-27-6R1-M	74	38	36	34	6
4,5	–	–	27	SD205A-4.5-27-6R1-M	74	38	36	34	6
4,763	3/16	–	32	SD205A-01875-126-0236R1-M	82	46	36	44	6
4,9	–	5 H7	32	SD205A-4.9-32-6R1-M	82	46	36	44	6
5,0	–	–	32	SD205A-5.0-32-6R1-M	82	46	36	44	6
5,5	–	–	32	SD205A-5.5-32-6R1-M	82	46	36	44	6
5,558	7/32	–	32	SD205A-02188-126-0236R1-M	82	46	36	44	6
6,0	–	–	35	SD205A-6.0-32-6R1-M	82	46	36	44	6
6,35	1/4	–	35	SD205A-02500-138-0315R1-M	91	55	36	53	8
6,5	–	–	35	SD205A-6.5-35-8R1-M	91	55	36	53	8
6,6	–	–	35	SD205A-6.6-35-8R1-M	91	55	36	53	8
6,8	–	–	40	SD205A-6.8-40-8R1-M	91	55	36	53	8
6,9	–	7 H6/7 H7	40	SD205A-6.9-40-8R1-M	91	55	36	53	8
7,0	–	–	40	SD205A-7.0-40-8R1-M	91	55	36	53	8
7,145	9/32	–	40	SD205A-02813-157-0315R1-M	91	55	36	53	8
7,5	–	–	40	SD205A-7.5-40-8R1-M	91	55	36	53	8
7,8	–	–	42	SD205A-7.8-42-8R1-M	91	55	36	53	8
7,9	–	8 H6/8 H7	42	SD205A-7.9-42-8R1-M	91	55	36	53	8
7,938	5/16	–	42	SD205A-03125-165-0315R1-M	91	55	36	53	8
8,0	–	–	42	SD205A-8.0-42-8R1-M	91	55	36	53	8
8,5	–	–	42	SD205A-8.5-42-10R1-M	103	63	40	61	10
8,733	11/32	–	45	SD205A-03438-177-0394R1-M	103	63	40	61	10
8,8	–	–	45	SD205A-8.8-45-10R1-M	103	63	40	61	10
9,0	–	–	45	SD205A-9.0-45-10R1-M	103	63	40	61	10
9,5	–	–	45	SD205A-9.5-45-10R1-M	103	63	40	61	10
9,525	3/8	–	48	SD205A-03750-189-0394R1-M	103	63	40	61	10
9,9	–	10 H6/10 H7	48	SD205A-9.9-48-10R1-M	103	63	40	61	10
10,0	–	–	48	SD205A-10.0-48-10R1-M	103	63	40	61	10
10,2	–	–	48	SD205A-10.2-48-12R1-M	118	73	45	71	12
10,4	–	–	48	SD205A-10.4-48-12R1-M	118	73	45	71	12
10,5	–	–	48	SD205A-10.5-48-12R1-M	118	73	45	71	12

* For further information regarding reaming (see page 317).
For intermediate diameters see the Custom Design software.

Seco Feedmax™ – SD205A, - M

Drilling depth ~ 5 x D

Cylindrical shank DIN 6537A



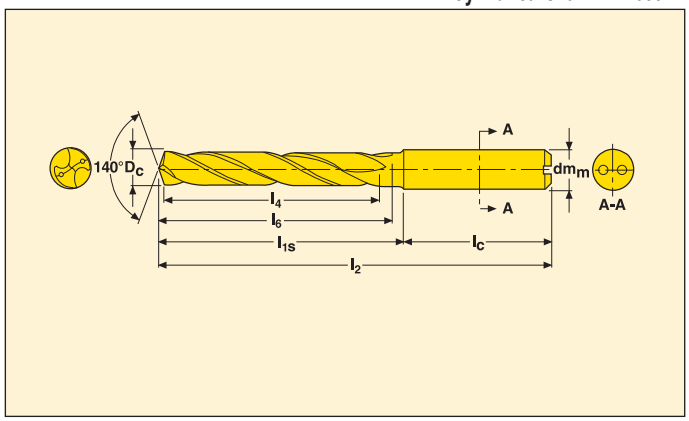

- Internal coolant
- For cutting and machining data see pages 124-125
- Coating: TiAlN + TiN
- Hole tolerance: IT 8-9

D_c m7 (mm)	D_c m7 (inch)	Reamer size*	l_4	Part No.	Dimensions in mm				
					l_2	l_{1s}	l_c	l_6	dm_m h6
10,8	–	–	56	**SD205A-10.8-56-12R1-M**	118	73	45	71	12
10,9	–	11 H6/11 H7	56	**SD205A-10.9-56-12R1-M**	118	73	45	71	12
11,0	–	–	56	**SD205A-11.0-56-12R1-M**	118	73	45	71	12
11,113	7/16	–	56	**SD205A-04375-221-0472R1-M**	118	73	45	71	12
11,5	–	–	56	**SD205A-11.5-56-12R1-M**	118	73	45	71	12
11,8	–	–	56	**SD205A-11.8-56-12R1-M**	118	73	45	71	12
11,908	15/32	12 H6/12 H7	56	**SD205A-04688-221-0472R1-M**	118	73	45	71	12
12,0	–	–	56	**SD205A-12.0-56-12R1-M**	118	73	45	71	12
12,25	–	–	56	**SD205A-12.25-56-14R1-M**	124	79	45	77	14
12,5	–	–	56	**SD205A-12.5-56-14R1-M**	124	79	45	77	14
12,9	–	13 H6/13 H7	56	**SD205A-12.9-56-14R1-M**	124	79	45	77	14
13,0	–	–	56	**SD205A-13.0-56-14R1-M**	124	79	45	77	14
13,5	–	–	59	**SD205A-13.5-59-14R1-M**	124	79	45	77	14
14,0	–	–	59	**SD205A-14.0-59-14R1-M**	124	79	45	77	14
14,25	–	–	60	**SD205A-14.25-60-16R1-M**	133	85	48	83	16

* For further information regarding reaming (see page 317).
For intermediate diameters see the Custom Design software.

Intermediate diameters – drilling depth ~ 5 x D

Cylindrical shank DIN 6537A



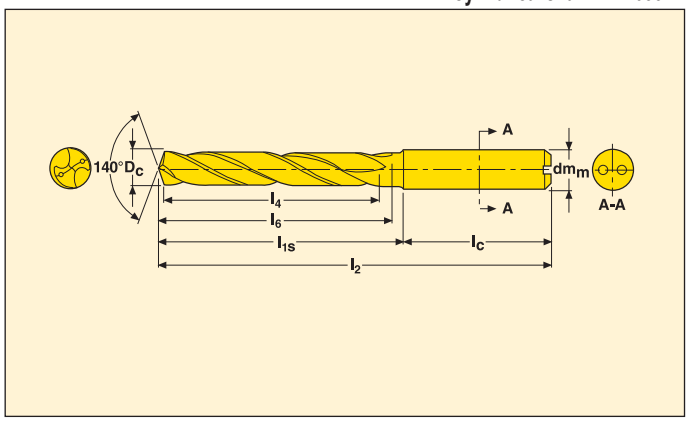

- Internal coolant
- For cutting and machining data see pages 124-125
- Coating: TiAlN + TiN
- Hole tolerance: IT 8-9”

D_c	l_4	Part No.	Dimensions in mm				
			l_2	l_{1s}	l_c	l_6	dm_m h6
3,00-3,75	21	SD205A-x.xx-21-6R1-M	66	30	36	26	6
3,76-4,75	27	SD205A-x.xx-27-6R1-M	74	38	36	34	6
4,76-6,00	32	SD205A-x.xx-32-6R1-M	82	46	36	44	6
6,01-6,70	35	SD205A-x.xx-35-8R1-M	91	55	36	53	8
6,71-7,50	40	SD205A-x.xx-40-8R1-M	91	55	36	53	8
7,51-8,00	42	SD205A-x.xx-42-8R1-M	91	55	36	53	8
8,01-8,50	42	SD205A-x.xx-42-10R1-M	103	63	40	61	10
8,51-9,50	45	SD205A-x.xx-45-10R1-M	103	63	40	61	10
9,51-10,00	48	SD205A-x.xx-48-10R1-M	103	63	40	61	10
10,00-10,50	48	SD205A-x.xx-48-12R1-M	118	73	45	71	12
10,51-12,00	56	SD205A-xx.xx-56-12R1-M	118	73	45	71	12
12,01-13,00	56	SD205A-xx.xx-56-14R1-M	124	79	45	77	14
13,01-14,00	59	SD205A-xx.xx-59-14R1-M	124	79	45	77	14
14,01-15,00	60	SD205A-xx.xx-60-16R1-M	133	85	48	83	16
15,01-16,00	62	SD205A-xx.xx-62-16R1-M	133	85	48	83	16
16,01-17,00	64	SD205A-xx.xx-64-18R1-M	143	95	48	93	18
17,01-18,00	66	SD205A-xx.xx-66-18R1-M	143	95	48	93	18
18,01-20,00	71	SD205A-xx.xx-71-20R1-M	153	103	50	101	20

The drills are available in ∅ increments of 0,01 mm. Fill in required cutting ∅ instead of -xx.xx- according to the ordering example.
Cutting ∅ tolerance is equal to m7 unless otherwise specified. Ordering example for ∅ 11,3 mm: SD205A-11.3-56-12R1-M.
Also available for intermediate diameters in the Custom Design software.

Seco Feedmax™ – SD203, -T

Intermediate diameters – drilling depth ~ 3 x D

Cylindrical shank DIN 6537A



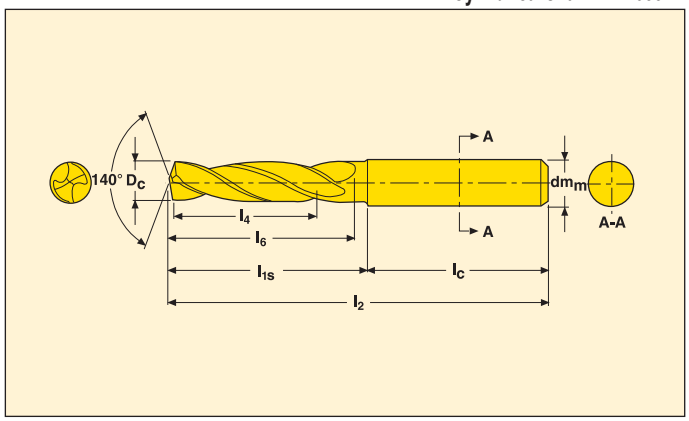

- External coolant
- For cutting and machining data see page 121
- Uncoated
- Hole tolerance: IT 8-9

Dc	l4	Part No.	Dimensions in mm				
			l2	l1s	lc	l6	dmm h6
3,00-3,40	14	SD203-x.xx-14-6R1-T	62	26	36	20	6
3,41-3,75	15	SD203-x.xx-15-6R-T	62	26	36	20	6
3,76-4,20	17	SD203-x.xx-17-6R1-T	66	30	36	24	6
4,21-4,50	18	SD203-x.xx-18-6R1-T	66	30	36	24	6
4,51-4,75	18	SD203-x.xx-18-6R1-T	66	30	36	26	6
4,76-5,20	20	SD203-x.xx-20-6R1-T	66	30	36	28	6
5,21-6,00	21	SD203-x.xx-21-6R1-T	66	30	36	28	6
6,00-6,60	23	SD203-x.xx-23-8R1-T	79	43	36	34	8
6,61-7,00	25	SD203-x.xx-25-8R1-T	79	43	36	34	8
7,01-7,50	25	SD203-x.xx-25-8R1-T	79	43	36	41	8
7,51-8,00	27	SD203-x.xx-27-8R1-T	79	43	36	41	8
8,01-8,60	27	SD203-x.xx-27-10R1-T	89	49	40	47	10
8,61-9,50	29	SD203-x.xx-29-10R1-T	89	49	40	47	10
9,51-10,00	31	SD203-x.xx-31-10R1-T	89	49	40	47	10
10,01-10,50	31	SD203-xx.xx-31-12R1-T	102	57	45	55	12
10,51-11,80	33	SD203-xx.xx-33-12R1-T	102	57	45	55	12
11,81-12,00	36	SD203-xx.xx-36-12R1-T	102	57	45	55	12
12,01-13,00	36	SD203-xx.xx-36-14R1-T	107	62	45	60	14
13,01-14,00	37	SD203-xx.xx-37-14R1-T	107	62	45	60	14
14,01-15,00	38	SD203-xx.xx-38-16R1-T	115	67	48	65	16
15,01-16,00	39	SD203-xx.xx-39-16R1-T	115	67	48	65	16
16,01-17,00	40	SD203-xx.xx-40-18R1-T	123	75	48	73	18
17,01-18,00	41	SD203-xx.xx-41-18R1-T	123	75	48	73	18
18,01-20,00	49	SD203-xx.xx-49-20R1-T	131	81	50	79	20

The drills are available in ∅ increments of 0,01 mm. Fill in required cutting ∅ instead of -xx.xx- according to the ordering example.
Cutting ∅ tolerance is equal to m7 unless otherwise specified. Ordering example for ∅ 11,3 mm: SD203-11.3-33-12R1-T.
Also available for intermediate diameters in the Custom Design software.

Seco Feedmax™ – SD203A,-T

Drilling depth ~ 3 x D

Cylindrical shank DIN 6537A

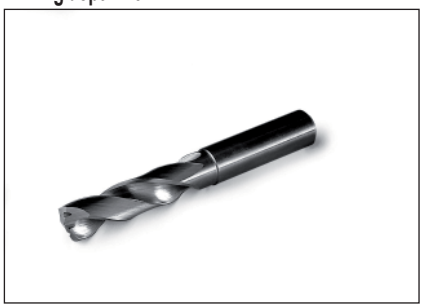

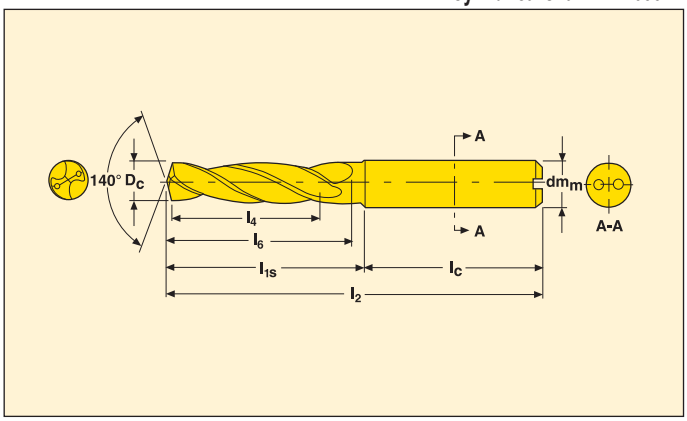

- Internal coolant
- For cutting and machining data see pages 122-123
- Uncoated
- Hole tolerance: IT 8-9

D_c m7 (mm)	D_c m7 (inch)	Reamer size*	l_4	Part No.	Dimensions in mm				
					l_2	l_{1s}	l_c	l_6	dm_m h6
4,763	3/16	–	20	SD203A-01875-079-0236R1-T	66	30	36	28	6
5,0	–	–	20	SD203A-5.0-20-6R1-T	66	30	36	28	6
5,558	7/32	–	20	SD203A-02188-083-0236R1-T	66	30	36	28	6
6,0	–	–	21	SD203A-6.0-21-6R1-T	66	30	36	28	6
6,35	1/4	–	23	SD203A-02500-091-0315R1-T	79	43	36	34	8
6,5	–	–	23	SD203A-6.5-23-8R1-T	79	43	36	34	8
6,746	17/64	–	25	SD203A-02656-098-0315R1-T	79	43	36	34	8
6,9	–	–	25	SD203A-6.9-25-8R1-T	79	43	36	34	8
7,0	–	–	25	SD203A-7.0-25-8R1-T	79	43	36	34	8
7,145	9/32	–	25	SD203A-02813-098-0315R1-T	79	43	36	41	8
7,5	–	–	25	SD203A-7.5-25-8R1-T	79	43	36	41	8
7,938	5/16	–	27	SD203A-03125-106-0315R1-T	79	43	36	41	8
8,0	–	–	27	SD203A-8.0-27-8R1-T	79	43	36	41	8
8,5	–	–	27	SD203A-8.5-27-10R1-T	89	49	40	47	10
8,8	–	–	29	SD203A-8.8-29-10R1-T	89	49	40	47	10
9,0	–	–	29	SD203A-9.0-29-10R1-T	89	49	40	47	10
9,5	–	–	29	SD203A-9.5-29-10R1-T	89	49	40	47	10
10,0	–	–	31	SD203A-10.0-31-10R1-T	89	49	40	47	10
10,32	13/32	–	31	SD203A-04063-122-0472R1-T	102	57	45	55	12
10,5	–	–	31	SD203A-10.5-31-12R1-T	102	57	45	55	12
11,0	–	–	33	SD203A-11.0-33-12R1-T	102	57	45	55	12
11,5	–	–	33	SD203A-11.5-33-12R1-T	102	57	45	55	12
12,0	–	–	36	SD203A-12.0-36-12R1-T	102	57	45	55	12

For intermediate diameters see the Custom Design software.

Intermediate diameters – drilling depth ~ 3 x D

Cylindrical shank DIN 6537A

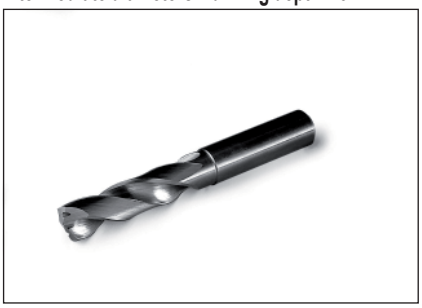

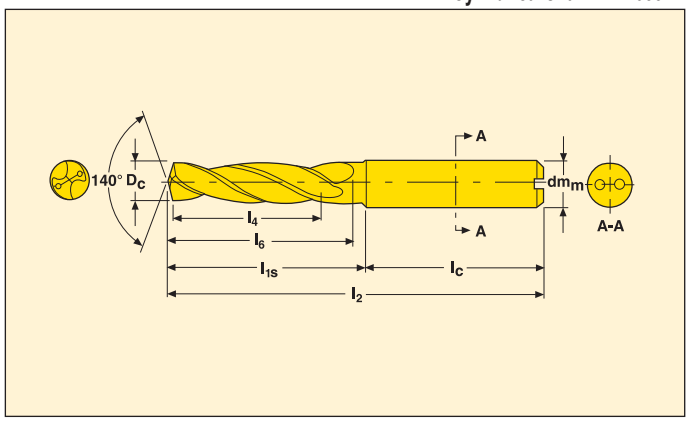

- Internal coolant
- For cutting and machining data see pages 122-123
- Uncoated
- Hole tolerance: IT 8-9

D_c	l_4	Part No.	Dimensions in mm				
			l_2	l_{1s}	l_c	l_6	dm_m h6
3,00-3,40	14	SD203A-x.xx-14-6R1-T	62	26	36	20	6
3,41-3,75	15	SD203A-x.xx-15-6R1-T	62	26	36	20	6
3,76-4,20	17	SD203A-x.xx-17-6R1-T	66	30	36	24	6
4,21-4,75	18	SD203A-x.xx-18-6R1-T	66	30	36	24	6
4,76-5,20	20	SD203A-x.xx-20-6R1-T	66	30	36	28	6
5,21-6,00	21	SD203A-x.xx-21-6R1-T	66	30	36	28	6
6,01-6,60	23	SD203A-x.xx-23-8R1-T	79	43	36	34	8
6,61-7,00	25	SD203A-x.xx-25-8R1-T	79	43	36	34	8
7,51-8,00	27	SD203A-x.xx-27-8R1-T	79	43	36	41	8
8,01-8,60	27	SD203A-x.xx-27-10R1-T	89	49	40	47	10
8,61-9,50	29	SD203A-x.xx-29-10R1-T	89	49	40	47	10
9,51-10,00	31	SD203A-x.xx-31-10R1-T	89	49	40	47	10
10,01-10,50	31	SD203A-xx.xx-31-12R1-T	102	57	45	55	12
10,51-11,80	33	SD203A-xx.xx-33-12R1-T	102	57	45	55	12
11,81-12,00	36	SD203A-xx.xx-36-12R1-T	102	57	45	55	12
12,01-13,00	36	SD203A-xx.xx-36-14R1-T	107	62	45	60	14
13,01-14,00	37	SD203A-xx.xx-37-14R1-T	107	62	45	60	14
14,01-15,00	38	SD203A-xx.xx-38-16R1-T	115	67	48	65	16
15,01-16,00	39	SD203A-xx.xx-39-16R1-T	115	67	48	65	16
16,01-17,00	40	SD203A-xx.xx-40-18R1-T	123	75	48	73	18
17,01-18,00	41	SD203A-xx.xx-41-18R1-T	123	75	48	73	18
18,01-20,00	49	SD203A-xx.xx-49-20R1-T	131	81	50	79	20

The drills are available in ∅ increments of 0,01 mm. Fill in required cutting ∅ instead of -xx.xx- according to the ordering example.
Cutting ∅ tolerance is equal to m7 unless otherwise specified. Ordering example for ∅ 11,3 mm: SD203A-11.3-33-12R1-T.
Also available for intermediate diameters in the Custom Design software.

Seco Feedmax™ – SD205A,-T

Drilling depth ~ 5 x D

Cylindrical shank DIN 6537A

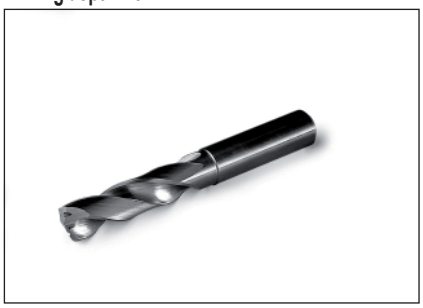

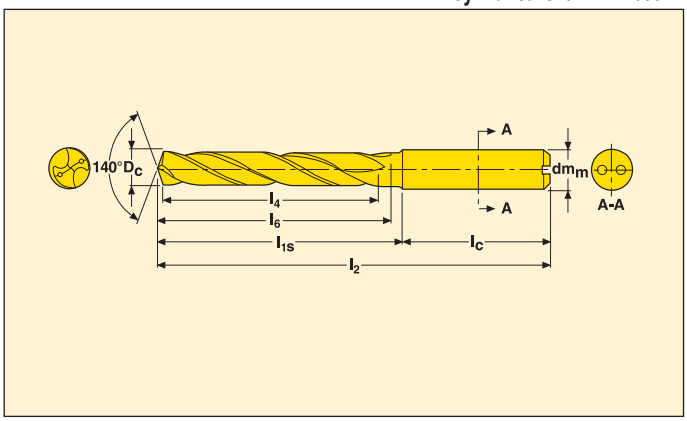

- Internal coolant
- For cutting and machining data see pages 124-125
- Uncoated
- Hole tolerance: IT 8-9

D_c m7 (mm)	D_c m7 (inch)	Reamer size*	l_4	Part No.	Dimensions in mm				
					l_2	l_{1s}	l_c	l_6	dm_m h6
4,763	3/16	–	32	SD205A-01875-126-0236R1-T	82	46	36	44	6
6,5	–	–	35	SD205A-6.5-35-8R1-T	91	55	36	53	8
6,746	17/64	–	40	SD205A-02656-157-0315R1-T	91	55	36	53	8
6,9	–	–	40	SD205A-6.9-40-8R1-T	91	55	36	53	8
7,145	9/32	–	40	SD205A-02813-157-0315R1-T	91	55	36	53	8
8,0	–	–	42	SD205A-8.0-42-8R1-T	91	55	36	53	8
10,5	–	–	48	SD205A-10.5-48-12R1-T	118	73	45	71	12
11,5	–	–	56	SD205A-11.5-56-12R1-T	118	73	45	71	12
12,0	–	–	56	SD205A-12.0-56-12R1-T	118	73	45	71	12

For intermediate diameters see the Custom Design software.

Seco Feedmax™ – SD205A,-T

Intermediate diameters – drilling depth ~ 5 x D

Cylindrical shank DIN 6537A

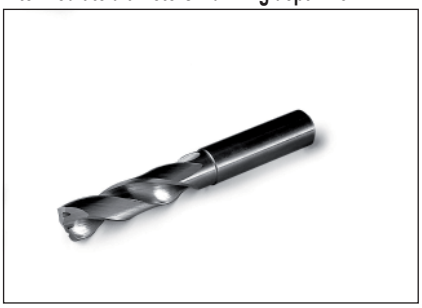

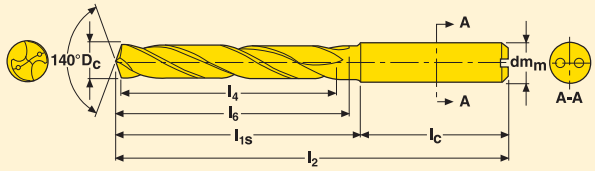

- Internal coolant
- For cutting and machining data see pages 124-125
- Hole tolerance: IT 8-9

			Dimensions in mm				
D_c	l_4	Part No.	l_2	l_{1s}	l_c	l_6	dm_m h6
3,00-3,75	21	SD205A-x.xx-21-6R1-T	66	30	36	26	6
3,76-4,75	27	SD205A-x.xx-27-6R1-T	74	38	36	34	6
4,76-6,00	32	SD205A-x.xx-32-6R1-T	82	46	36	44	6
6,01-6,70	35	SD205A-x.xx-35-8R1-T	91	55	36	53	8
6,71-7,50	40	SD205A-x.xx-40-8R1-T	91	55	36	53	8
7,51-8,00	42	SD205A-x.xx-42-8R1-T	91	55	36	53	8
8,01-8,50	42	SD205A-x.xx-42-10R1-T	103	63	40	61	10
8,51-9,50	45	SD205A-x.xx-45-10R1-T	103	63	40	61	10
9,51-10,00	48	SD205A-x.xx-48-10R1-T	103	63	40	61	10
10,01-10,50	48	SD205A-x.xx-48-12R1-T	118	73	45	71	12
10,51-12,00	56	SD205A-xx.xx-56-12R1-T	118	73	45	71	12
12,01-13,00	56	SD205A-xx.xx-56-14R1-T	124	79	45	77	14
13,01-14,00	59	SD205A-xx.xx-59-14R1-T	124	79	45	77	14
14,01-15,00	60	SD205A-xx.xx-60-16R1-T	133	85	48	83	16
15,01-16,00	62	SD205A-xx.xx-62-16R1-T	133	85	48	83	16
16,01-17,00	64	SD205A-xx.xx-64-18R1-T	143	95	48	93	18
17,01-18,00	66	SD205A-xx.xx-66-18R1-T	143	95	48	93	18
18,01-20,00	71	SD205A-xx.xx-71-20R1-T	153	103	50	101	20

The drills are available in ∅ increments of 0,01 mm. Fill in required cutting ∅ instead of -xx.xx- according to the ordering example.
Cutting ∅ tolerance is equal to m7 unless otherwise specified. Ordering example for ∅ 11,3 mm: SD205A-11.3-56-12R1-T.
Also available for intermediate diameters in the Custom Design software.

Seco Feedmax™ – SD203A, - N

Drilling depth ~ 3 x D

Cylindrical shank DIN 6537A



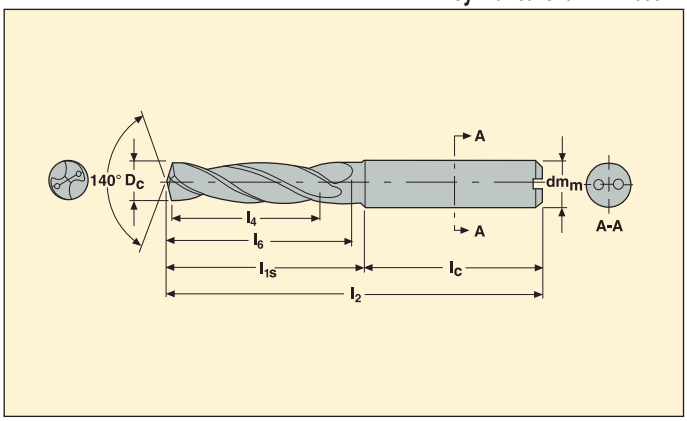

- Internal coolant
- For cutting and machining data see pages 122-123
- DLC Coated
- Hole tolerance: IT 8-9

D_c m7 (mm)	D_c m7 (inch)	l_4	Part No.	Dimensions in mm				
				l_2	l_{1s}	l_c	l_6	dm_m h6
2,5	–	8	SD203A-2.5-8-4R1-N	44	16	28	13	4
3,0	–	14	SD203A-3.0-14-6R1-N	62	26	36	20	6
3,3	–	14	SD203A-3.3-14-6R1-N	62	26	36	20	6
3,5	–	15	SD203A-3.5-15-6R1-N	62	26	36	20	6
4,0	–	17	SD203A-4.0-17-6R1-N	66	30	36	24	6
4,1	–	17	SD203A-4.1-17-6R1-N	66	30	36	24	6
4,5	–	18	SD203A-4.5-18-6R1-N	66	30	36	24	6
5,0	–	20	SD203A-5.0-20-6R1-N	66	30	36	28	6
5,2	–	20	SD203A-5.2-20-6R1-N	66	30	36	28	6
5,5	–	20	SD203A-5.5-20-6R1-N	66	30	36	28	6
6,0	–	21	SD203A-6.0-21-6R1-N	66	30	36	28	6
6,35	1/4	23	SD203A-02500-091-0315R1-N	79	43	36	34	8
6,5	–	23	SD203A-6.5-23-8R1-N	79	43	36	34	8
6,746	17/64	25	SD203A-02656-098-0315R1-N	79	43	36	34	8
6,8	–	25	SD203A-6.8-25-8R1-N	79	43	36	34	8
7,0	–	25	SD203A-7.0-25-8R1-N	79	43	36	34	8
7,1	–	25	SD203A-7.1-25-8R1-N	79	43	36	34	8
7,145	9/32	25	SD203A-02813-098-0315R1-N	79	43	36	41	8
7,5	–	25	SD203A-7.5-25-8R1-N	79	43	36	41	8
7,938	5/16	27	SD203A-03125-106-0315R1-N	79	43	36	41	8
8,0	–	27	SD203A-8.0-27-8R1-N	79	43	36	41	8
8,5	–	27	SD203A-8.5-27-10R1-N	89	49	40	47	10
9,0	–	29	SD203A-9.0-29-10R1-N	89	49	40	47	10
9,5	–	29	SD203A-9.5-29-10R1-N	89	49	40	47	10
9,525	3/8	31	SD203A-03750-122-0394R1-N	89	49	40	47	10
10,0	–	31	SD203A-10.0-31-10R1-N	89	49	40	47	10
10,2	–	31	SD203A-10.2-31-12R1-N	102	57	45	55	12
10,32	13/32	31	SD203A-04063-122-0472R1-N	102	57	45	55	12
10,5	–	31	SD203A-10.5-31-12R1-N	102	57	45	55	12
11,0	–	33	SD203A-11.0-33-12R1-N	102	57	45	55	12
11,113	7/16	33	SD203A-04375-130-0472R1-N	102	57	45	55	12
11,5	–	33	SD203A-11.5-33-12R1-N	102	57	45	55	12
12,0	–	36	SD203A-12.0-36-12R1-N	102	57	45	55	12
12,5	–	36	SD203A-12.5-36-14R1-N	107	62	45	60	14
12,7	1/2	36	SD203A-05000-142-0551R1-N	107	62	45	60	14
13,0	–	36	SD203A-13.0-36-14R1-N	107	62	45	60	14
13,492	17/32	37	SD203A-05312-146-0551R1-N	107	62	45	60	14
13,5	–	37	SD203A-13.5-37-14R1-N	107	62	45	60	14
14,0	–	37	SD203A-14.0-37-14R1-N	107	62	45	60	14

* For intermediate diameters see the Custom Design software.

Seco Feedmax™ – SD203A,- N

Intermediate diameters – drilling depth ~ 3 x D

Cylindrical shank DIN 6537A



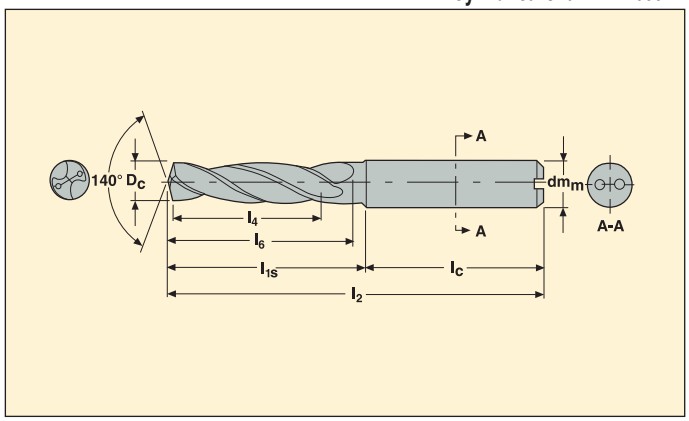

- Internal coolant
- For cutting and machining data see pages 122-123
- DLC Coated
- Hole tolerance: IT 8-9

D_c	l_4	Part No.	Dimensions in mm				
			l_2	l_{1s}	l_c	l_6	dm_m h6
2,00-2,20	7	**SD203A-x.xx-7-4R1-N**	41	13	28	11	4
2,21-2,60	8	**SD203A-x.xx-8-4R1-N**	44	16	28	13	4
2,61-2,99	9	**SD203A-x.xx-9-4R1-N**	44	16	28	15	4
3,00-3,40	14	**SD203A-x.xx-14-6R1-N**	62	26	36	20	6
3,41-3,75	15	**SD203A-x.xx-15-6R1-N**	62	26	36	20	6
3,76-4,20	17	**SD203A-x.xx-17-6R1-N**	66	30	36	24	6
4,21-4,50	18	**SD203A-x.xx-18-6R1-N**	66	30	36	24	6
4,51-4,75	18	**SD203A-x.xx-18-6R1-N**	66	30	36	26	6
4,76-5,20	20	**SD203A-x.xx-20-6R1-N**	66	30	36	28	6
5,21-6,00	21	**SD203A-x.xx-21-6R1-N**	66	30	36	28	6
6,01-6,60	23	**SD203A-x.xx-23-8R1-N**	79	43	36	34	8
6,61-7,00	25	**SD203A-x.xx-25-8R1-N**	79	43	36	34	8
7,01-7,50	25	**SD203A-x.xx-25-8R1-N**	79	43	36	41	8
7,51-8,00	27	**SD203A-x.xx-27-8R1-N**	79	43	36	41	8
8,01-8,60	27	**SD203A-x.xx-27-10R1-N**	89	49	40	47	10
8,61-9,50	29	**SD203A-x.xx-29-10R1-N**	89	49	40	47	10
9,51-10,00	31	**SD203A-x.xx-31-10R1-N**	89	49	40	47	10
10,01-10,50	31	**SD203A-xx.xx-31-12R1-N**	102	57	45	55	12
10,51-11,80	33	**SD203A-xx.xx-33-12R1-N**	102	57	45	55	12
11,81-12,00	36	**SD203A-xx.xx-36-12R1-N**	102	57	45	55	12
12,01-13,00	37	**SD203A-xx.xx-36-14R1-N**	107	62	45	60	14
13,01-14,00	37	**SD203A-xx.xx-37-14R1-N**	107	62	45	60	14
14,01-15,00	38	**SD203A-xx.xx-38-16R1-N**	115	67	48	65	16
15,01-16,00	39	**SD203A-xx.xx-39-16R1-N**	115	67	48	65	16
16,01-17,00	40	**SD203A-xx.xx-40-18R1-N**	123	75	48	73	18
17,01-18,00	41	**SD203A-xx.xx-41-18R1-N**	123	75	48	73	18
18,01-20,00	49	**SD203A-xx.xx-49-20R1-N**	131	81	50	79	20

The drills are available in ∅ increments of 0,01 mm. Fill in required cutting ∅ instead of -xx.xx- according to the ordering example.
Cutting ∅ tolerance is equal to m7 unless otherwise specified. Ordering example for ∅ 11,3 mm: SD203-11.3-33-12R1-N.
Also available for intermediate diameters in the Custom Design software.

Composite machining



When hole quality is in focus

With issues like entrance and exit delamination and splintering, the focus has been clear; design tools specifically optimized for composite applications, and tools specifically optimised for sandwich materials. In both cases particular consideration was given to acheiving excellent performance in both entering and exiting. (In sandwich material this usually involves exiting in either Al or Ti).

- No push-up delamination (entrance)
- No pull-down delamination (exit)

The Dura diamond coating secures good dimensional tolerance throughout the long tool life.





Application example

Plain CFRP/GFRP (exit in composite material)

CX1 geometry





Sandwich material (exit in Al/Ti)

CX2 geometry





CX31 geometry PCD
Universal geometry for both
Plain CFRP/GFRP and
Sandwich materials



Seco Feedmax™ – SD205A,-C1

Drilling depth ~ 5 x D

Cylindrical shank DIN 6537A



- Internal coolant
- For cutting and machining data see page 130
- Dura diamond coating"

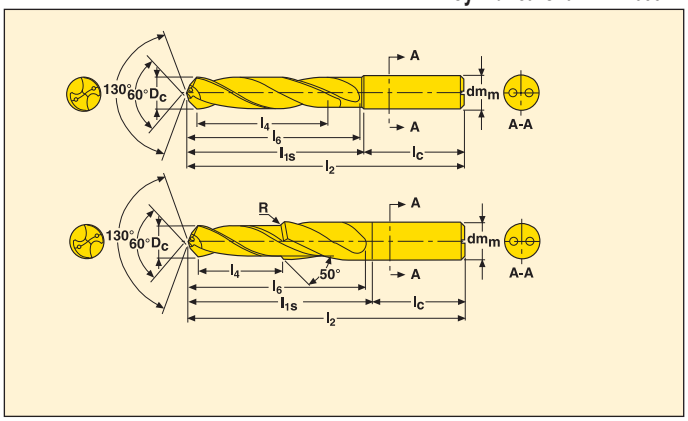

D_c	Drill dia D_c (inch)	Expected hole tolerance	Manufacturing tolerance drill	l_4	Part No.	Dimensions in mm				
						l_2	l_{1s}	l_c	l_6	dm_m
3,2	–	3,175/3,225	3,200 m7	20	SD205A-3.2-20-6R1-C1	66	30	36	26	6
4,1	–	4,075/4,125	4,100 m7	26	SD205A-4.1-26-6R1-C1	74	38	36	37	6
4,78	3/16	4,755/4,805	4,780 m7	31	SD205A-4.78-31-6R1-C1	82	46	36	44	6
6,0	–	5,975/6,025	6,000 m7	31	SD205A-6.0-31-6R1-C1	82	46	36	44	6
6,38	–	6,350/6,401	6,376 m7	34	SD205A-6.38-34-8R1-C1	91	55	36	53	8
7,963	5/16	7,938/7,988	7,963 m7	40	SD205A-7.963-40-8R1-C1	91	55	36	53	8
9,55	3/8	9,525/9,576	9,551 m7	46	SD205A-9.55-46-10R1-C1	103	63	40	61	10
11,138	7/16	11,112/11,163	11,138 m7	53	SD205A-11.138-53-12R1-C1	118	73	45	71	12
12,726	1/2	12,700/12,751	12,726 m7	53	SD205A-12.726-53-14R1-C1	124	79	45	77	14
4,78	3/16	4,755/4,805	4,780 m7	31	SD205A-C50-4.78-31-10R1-C1	89	49	40	47	10
6,0	–	5,975/6,025	6,00 m7	31	SD205A-C50-6.0-31-12R1-C1	94	49	45	47	12
6,376	1/4	6,350/6,401	6,376 m7	34	SD205A-C50-6.376-34-12R1-C1	103	58	45	56	12
7,963	5/16	7,938/7,988	7,963 m7	40	SD205A-C50-7.963-40-14R1-C1	103	58	45	56	14
9,551	3/8	9,525/9,576	9,551 m7	46	SD205A-C50-9.551-46-18R1-C1	115	67	48	65	18
11,138	7/16	11,112/11,163	11,138 m7	53	SD205A-C50-11.138-53-20R1-C1	127	77	50	75	20
12,726	1/2	12,700/12,751	12,726 m7	53	SD205A-C50-12.726-53-22R1-C1	133	83	50	81	22

For intermediate diameters see the Custom Design software.

Seco Feedmax™ – SD205A,-C2

Drilling depth ~ 5 x D

Cylindrical shank DIN 6537A



- Internal coolant
- For cutting and machining data see page 130
- Dura diamond coating"

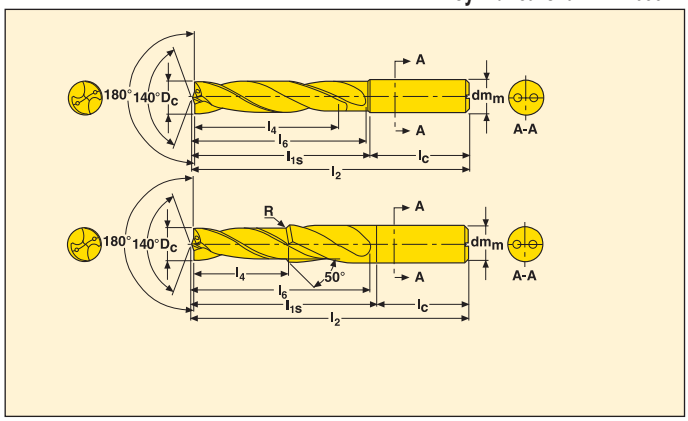

D_C	Drill dia D_C (inch)	Expected hole tolerance	Manufacturing tolerance drill	l_4	Part No.	Dimensions in mm				
						l_2	l_{1s}	l_c	l_6	dm_m
3,2	–	3,175/3,225	3,200 m7	21	SD205A-3.2-21-6R1-C2	66	30	36	26	6
4,1	–	4,075/4,125	4,100 m7	27	SD205A-4.1-27-6R1-C2	74	38	36	37	6
4,78	3/16	4,755/4,805	4,780 m7	32	SD205A-4.78-32-6R1-C2	82	46	36	44	6
6,0	–	5,975/6,025	6,000 m7	32	SD205A-6.0-32-6R1-C2	82	46	36	44	6
6,38	1/4	6,350/6,401	6,376 m7	35	SD205A-6.38-35-8R1-C2	91	55	36	53	8
7,963	5/16	7,938/7,988	7,963 m7	42	SD205A-7.963-42-8R1-C2	91	55	36	53	8
9,55	3/18	9,525/9,576	9,551 m7	48	SD205A-9.55-48-10R1-C2	103	63	40	61	10
11,138	7/16	11,112/11,163	11,138 m7	56	SD205A-11.138-56-12R1-C2	118	73	45	71	12
12,726	1/2	12,700/12,751	12,726 m7	56	SD205A-12.726-56-14R1-C2	124	79	45	77	14
4,78	3/16	4,755/4,805	4,780 m7	32	SD205A-C50-4.78-32-10R1-C2	89	49	40	47	10
6,0	–	5,975/6,025	6,000 m7	32	SD205A-C50-6.0-32-12R1-C2	94	49	45	47	12
6,376	1/4	6,350/6,401	6,376 m7	35	SD205A-C50-6.376-35-12R1-C2	103	58	45	56	12
7,963	5/16	7,938/7,988	7,963 m7	42	SD205A-C50-7.963-42-14R1-C2	103	58	45	56	14
9,551	3/8	9,525/9,576	9,551 m7	48	SD205A-C50-9.551-48-18R1-C2	115	67	48	65	18
11,138	7/16	11,112/11,163	11,138 m7	56	SD205A-C50-11.138-56-20R1-C2	127	77	50	75	20
12,726	1/2	12,700/12,751	12,726 m7	56	SD205A-C50-12.726-56-22R1-C2	133	83	50	81	22

For intermediate diameters see the Custom Design software.

Seco Feedmax™ – SD203,-CX1

Drilling depth ~ 3 X D

Cylindrical shank DIN 6537A



- PCD cutting edges.
- For cutting and machining data see page 130

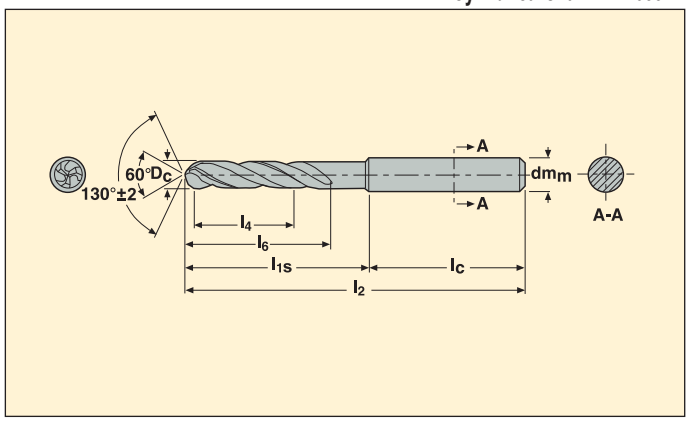

D_c	Drill dia D_c (inch)	Expected hole tolerance	Manufacturing tolerance drill	l_4	Part No.	Dimensions in mm				
						l_2	l_{1s}	l_c	l_6	dm_m
3,26	.128	3,235/3,285	3,260 m7	14	**SD203-3.26-14-6R1-CX1**	62	26	36	21	6
4,17	.164	4,142/4,192	4,167 m7	17	**SD203-4.17-17-6R1-CX1**	66	30	36	25	6
4,83	.190	4,805/4,855	4,830 m7	20	**SD203-4.83-20-6R1-CX1**	66	30	36	28	6
6,06	.239	6,035/6,085	6,060 m7	21	**SD203-6.06-21-6R1-CX1**	66	30	36	28	6
6,36	.250	6,33/6,38	6,355 m7	23	**SD203-6.36-23-8R1-CX1**	79	43	36	34	8
7,94	.313	7,913/7,963	7,938 m7	27	**SD203-7.94-27-8R1-CX1**	79	43	36	41	8
9,53	.375	9,504/9,554	9,529 m7	31	**SD203-9.53-31-10R1-CX1**	89	49	40	47	10

For intermediate diameters see Custom Design software

Drilling depth ~ 3 X D

Cylindrical shank DIN 6537A



- A= Internal through coolant
- PCD cutting edges
- For cutting and machining data see page 130

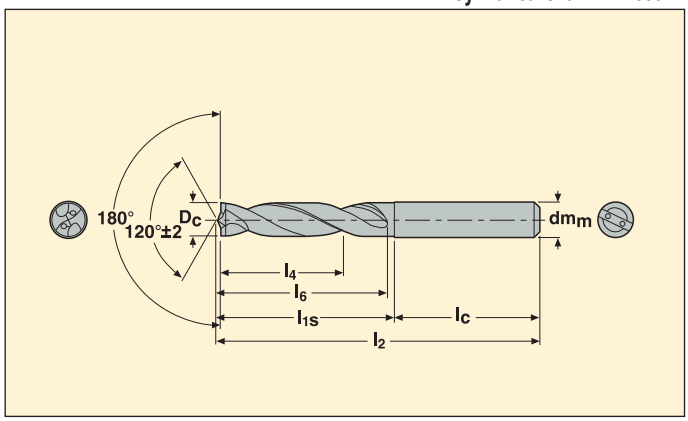

D_c	Drill dia D_c (inch)	Expected hole tolerance	Manufacturing tolerance drill	l_4	Part No.	Dimensions in mm				
						l_2	l_{1s}	l_c	l_6	dm_m
3,26	.128	3,235/3,285	3,260 m7	14	**SD203A-3.26-14-6R1-CX2**	62	26	36	20	6
4,17	.164	4,142/4,192	4,167 m7	17	**SD203A-4.17-17-6R1-CX2**	66	30	36	24	6
4,83	.190	4,805/4,855	4,830 m7	20	**SD203A-4.83-20-6R1-CX2**	66	30	36	28	6
6,06	.239	6,035/6,085	6,060 m7	21	**SD203A-6.06-21-6R1-CX2**	66	30	36	28	6
6,36	.250	6,33/6,38	6,355 m7	23	**SD203A-6.36-23-8R1-CX2**	79	43	36	34	8
7,94	.313	7,913/7,963	7,938 m7	27	**SD203A-7.94-27-8R1-CX2**	79	43	36	41	8
9,53	.375	9,504/9,554	9,529 m7	31	**SD203A-9.53-31-10R1-CX2**	89	49	40	47	10

For intermediate diameters see Custom Design software.

Seco Feedmax™ – SD205,-CX31

Drilling depth ~ 5 X D

Cylindrical shank DIN 6537A



- PCD cutting edges
- For cutting and machining data see page 130

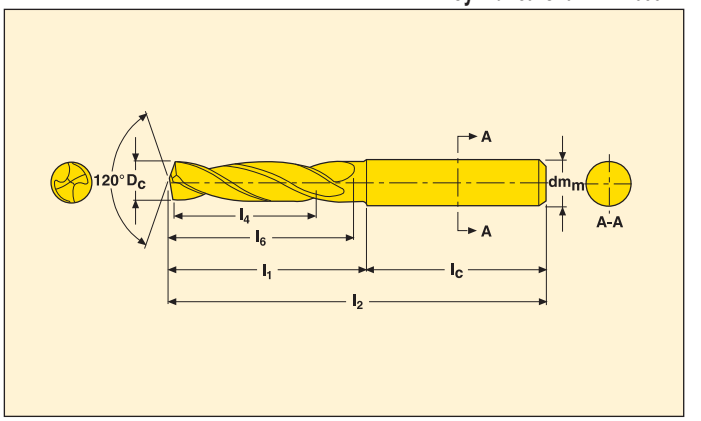

D_c	Drill dia D_c (inch)	Expected hole tolerance	Manufacturing tolerance drill	l_4	Part No.	Dimensions in mm				
						l_2	l_{1s}	l_c	l_6	dm_m
4,10		4,075/4,125	4,100 m7	26	**SD205-4.10-26-6R1-CX31**	74	38	36	37	6
4,78	3/16	4,755/4,805	4,780 m7	31	**SD205-4.78-31-6R1-CX31**	82	46	36	44	6
6,00		5,975/6,025	6,000 m7	31	**SD205-6.00-31-6R1-CX31**	82	46	36	44	6
6,38	1/4	6,350/6,401	6,376 m7	34	**SD205-6.38-34-8R1-CX31**	91	55	36	53	8
7,963	5/16	7,938/7,988	7,963 m7	40	**SD205-7.963-40-8R1-CX31**	91	55	36	53	8

For intermediate diameters see the Custom Design software.

Micro drill



Seco Feedmax™ – SD22

Drilling depth ~ 2 X D (Pilot drill)

Cylindrical shank



- External coolant
- For cutting and machining data see page 131-133
- Uncoated"

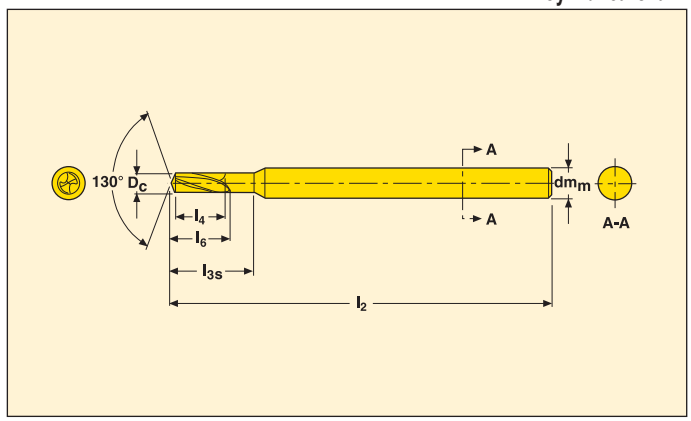

D_c	l_4	Part No.	Dimensions in mm		
			l_2	l_{3s}	dm_m
0,10	0,20	SD22-0.10-0.20-3R1	38	0,55	3
0,11	0,22	SD22-0.11-0.22-3R1	38	0,55	3
0,12	0,24	SD22-0.12-0.24-3R1	38	0,55	3
0,13	0,26	SD22-0.13-0.26-3R1	38	0,60	3
0,14	0,28	SD22-0.14-0.28-3R1	38	0,60	3
0,15	0,30	SD22-0.15-0.30-3R1	38	0,60	3
0,16	0,32	SD22-0.16-0.32-3R1	38	0,60	3
0,17	0,34	SD22-0.17-0.34-3R1	38	0,70	3
0,18	0,36	SD22-0.18-0.36-3R1	38	0,70	3
0,19	0,38	SD22-0.19-0.38-3R1	38	0,70	3
0,20	0,40	SD22-0.20-0.40-3R1	38	0,75	3
0,21	0,42	SD22-0.21-0.42-3R1	38	0,75	3
0,22	0,44	SD22-0.22-0.44-3R1	38	0,80	3
0,23	0,46	SD22-0.23-0.46-3R1	38	0,80	3
0,24	0,48	SD22-0.24-0.48-3R1	38	0,80	3
0,25	0,50	SD22-0.25-0.50-3R1	38	0,90	3
0,26	0,52	SD22-0.26-0.52-3R1	38	0,90	3
0,27	0,54	SD22-0.27-0.54-3R1	38	0,90	3
0,28	0,56	SD22-0.28-0.56-3R1	38	1,00	3
0,29	0,58	SD22-0.29-0.58-3R1	38	1,00	3
0,30	0,60	SD22-0.30-0.60-3R1	38	1,20	3
0,31	0,62	SD22-0.31-0.62-3R1	38	1,20	3
0,32	0,64	SD22-0.32-0.64-3R1	38	1,20	3
0,33	0,66	SD22-0.33-0.66-3R1	38	1,20	3
0,34	0,68	SD22-0.34-0.68-3R1	38	1,35	3
0,35	0,70	SD22-0.35-0.70-3R1	38	1,35	3
0,36	0,72	SD22-0.36-0.72-3R1	38	1,35	3
0,37	0,74	SD22-0.37-0.74-3R1	38	1,35	3
0,38	0,76	SD22-0.38-0.76-3R1	38	1,50	3
0,39	0,78	SD22-0.39-0.78-3R1	38	1,50	3
0,40	0,80	SD22-0.40-0.80-3R1	38	1,60	3
0,41	0,82	SD22-0.41-0.82-3R1	38	1,60	3
0,42	0,84	SD22-0.42-0.84-3R1	38	1,60	3
0,43	0,86	SD22-0.43-0.86-3R1	38	1,60	3
0,44	0,88	SD22-0.44-0.88-3R1	38	1,60	3
0,45	0,90	SD22-0.45-0.90-3R1	38	1,60	3
0,46	0,92	SD22-0.46-0.92-3R1	38	1,70	3
0,47	0,94	SD22-0.47-0.94-3R1	38	1,70	3
0,48	0,96	SD22-0.48-0.96-3R1	38	1,70	3
0,49	0,98	SD22-0.49-0.98-3R1	38	1,70	3
0,50	1,00	SD22-0.50-1.00-3R1	38	1,70	3
0,51	1,02	SD22-0.51-1.02-3R1	38	1,80	3

Drilling depth ~ 2 X D (Pilot drill)

Cylindrical shank



- External coolant
- For cutting and machining data see page 131-133
- Uncoated

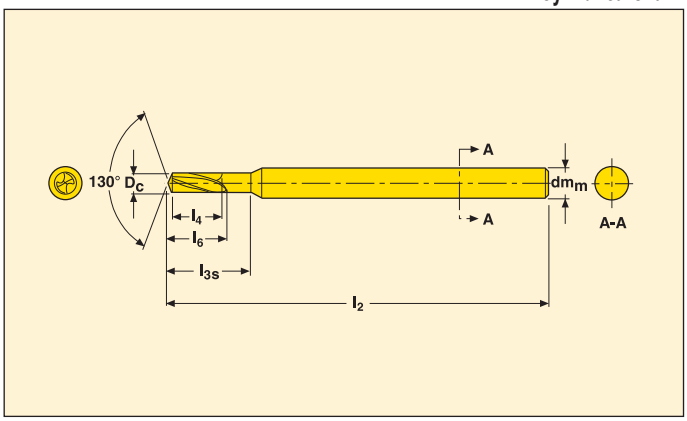

D_c	l_4	Part No.	Dimensions in mm		
			l_2	l_{3s}	dm_m
0,52	1,04	SD22-0.52-1.04-3R1	38	1,80	3
0,53	1,06	SD22-0.53-1.06-3R1	38	1,80	3
0,54	1,08	SD22-0.54-1.08-3R1	38	1,80	3
0,55	1,10	SD22-0.55-1.10-3R1	38	1,80	3
0,56	1,12	SD22-0.56-1.12-3R1	38	1,90	3
0,57	1,14	SD22-0.57-1.14-3R1	38	1,90	3
0,58	1,16	SD22-0.58-1.16-3R1	38	1,90	3
0,59	1,18	SD22-0.59-1.18-3R1	38	1,90	3
0,60	1,20	SD22-0.60-1.20-3R1	38	1,90	3
0,61	1,22	SD22-0.61-1.22-3R1	38	2,00	3
0,62	1,24	SD22-0.62-1.24-3R1	38	2,00	3
0,63	1,26	SD22-0.63-1.26-3R1	38	2,00	3
0,64	1,28	SD22-0.64-1.28-3R1	38	2,00	3
0,65	1,30	SD22-0.65-1.30-3R1	38	2,00	3
0,66	1,32	SD22-0.66-1.32-3R1	38	2,10	3
0,67	1,34	SD22-0.67-1.34-3R1	38	2,10	3
0,68	1,36	SD22-0.68-1.36-3R1	38	2,10	3
0,69	1,38	SD22-0.69-1.38-3R1	38	2,10	3
0,70	1,40	SD22-0.70-1.40-3R1	38	2,10	3
0,71	1,42	SD22-0.71-1.42-3R1	38	2,20	3
0,72	1,44	SD22-0.72-1.44-3R1	38	2,20	3
0,73	1,46	SD22-0.73-1.46-3R1	38	2,20	3
0,74	1,48	SD22-0.74-1.48-3R1	38	2,20	3
0,75	1,50	SD22-0.75-1.50-3R1	38	2,20	3
0,76	1,52	SD22-0.76-1.52-3R1	38	2,30	3
0,77	1,54	SD22-0.77-1.54-3R1	38	2,30	3
0,78	1,56	SD22-0.78-1.56-3R1	38	2,30	3
0,79	1,58	SD22-0.79-1.58-3R1	38	2,30	3
0,80	1,60	SD22-0.80-1.60-3R1	38	2,30	3
0,81	1,62	SD22-0.81-1.62-3R1	38	2,40	3
0,82	1,64	SD22-0.82-1.64-3R1	38	2,40	3
0,83	1,66	SD22-0.83-1.66-3R1	38	2,40	3
0,84	1,68	SD22-0.84-1.68-3R1	38	2,40	3
0,85	1,70	SD22-0.85-1.70-3R1	38	2,40	3
0,86	1,72	SD22-0.86-1.72-3R1	38	2,50	3
0,87	1,74	SD22-0.87-1.74-3R1	38	2,50	3
0,88	1,76	SD22-0.88-1.76-3R1	38	2,50	3
0,89	1,78	SD22-0.89-1.78-3R1	38	2,50	3
0,90	1,80	SD22-0.90-1.80-3R1	38	2,50	3
0,91	1,82	SD22-0.91-1.82-3R1	38	2,60	3
0,92	1,84	SD22-0.92-1.84-3R1	38	2,60	3
0,93	1,86	SD22-0.93-1.86-3R1	38	2,60	3

Seco Feedmax™ – SD22

Drilling depth ~ 2 X D (Pilot drill)

Cylindrical shank



- External coolant
- For cutting and machining data see page 131-133
- Uncoated"

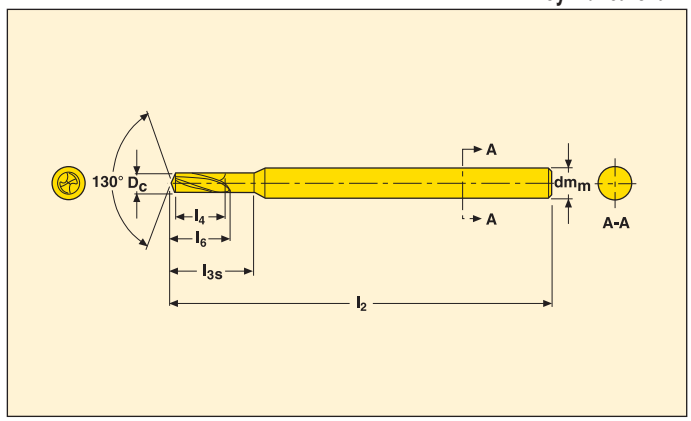

D_c	l_4	Part No.	Dimensions in mm		
			l_2	l_{3s}	dm_m
0,94	1,88	SD22-0.94-1.88-3R1	38	2,60	3
0,95	1,90	SD22-0.95-1.90-3R1	38	2,60	3
0,96	1,92	SD22-0.96-1.92-3R1	38	2,70	3
0,97	1,94	SD22-0.97-1.94-3R1	38	2,70	3
0,98	1,96	SD22-0.98-1.96-3R1	38	2,70	3
0,99	1,98	SD22-0.99-1.98-3R1	38	2,70	3
1,00	2,00	SD22-1.00-2.00-3R1	38	2,70	3
1,01	2,02	SD22-1.01-2.02-3R1	38	3,50	3
1,02	2,04	SD22-1.02-2.04-3R1	38	3,50	3
1,03	2,06	SD22-1.03-2.06-3R1	38	3,50	3
1,04	2,08	SD22-1.04-2.08-3R1	38	3,50	3
1,05	2,10	SD22-1.05-2.10-3R1	38	3,50	3
1,06	2,12	SD22-1.06-2.12-3R1	38	3,60	3
1,07	2,14	SD22-1.07-2.14-3R1	38	3,60	3
1,08	2,16	SD22-1.08-2.16-3R1	38	3,60	3
1,09	2,18	SD22-1.09-2.18-3R1	38	3,60	3
1,10	2,20	SD22-1.10-2.20-3R1	38	3,60	3
1,11	2,22	SD22-1.11-2.22-3R1	38	3,70	3
1,12	2,24	SD22-1.12-2.24-3R1	38	3,70	3
1,13	2,26	SD22-1.13-2.26-3R1	38	3,70	3
1,14	2,28	SD22-1.14-2.28-3R1	38	3,70	3
1,15	2,30	SD22-1.15-2.30-3R1	38	3,70	3
1,16	2,32	SD22-1.16-2.32-3R1	38	3,80	3
1,17	2,34	SD22-1.17-2.34-3R1	38	3,80	3
1,18	2,36	SD22-1.18-2.36-3R1	38	3,80	3
1,19	2,38	SD22-1.19-2.38-3R1	38	3,80	3
1,20	2,40	SD22-1.20-2.40-3R1	38	3,80	3
1,21	2,42	SD22-1.21-2.42-3R1	38	4,20	3
1,22	2,44	SD22-1.22-2.44-3R1	38	4,20	3
1,23	2,46	SD22-1.23-2.46-3R1	38	4,20	3
1,24	2,48	SD22-1.24-2.48-3R1	38	4,20	3
1,25	2,50	SD22-1.25-2.50-3R1	38	4,20	3
1,26	2,52	SD22-1.26-2.52-3R1	38	4,30	3
1,27	2,54	SD22-1.27-2.54-3R1	38	4,30	3
1,28	2,56	SD22-1.28-2.56-3R1	38	4,30	3
1,29	2,58	SD22-1.29-2.58-3R1	38	4,30	3
1,30	2,60	SD22-1.30-2.60-3R1	38	4,30	3
1,31	2,62	SD22-1.31-2.62-3R1	38	4,40	3
1,32	2,64	SD22-1.32-2.64-3R1	38	4,40	3
1,33	2,66	SD22-1.33-2.66-3R1	38	4,40	3
1,34	2,68	SD22-1.34-2.68-3R1	38	4,40	3
1,35	2,70	SD22-1.35-2.70-3R1	38	4,40	3

Drilling depth ~ 2 X D (Pilot drill)

Cylindrical shank



- External coolant
- For cutting and machining data see page 131-133
- Uncoated"

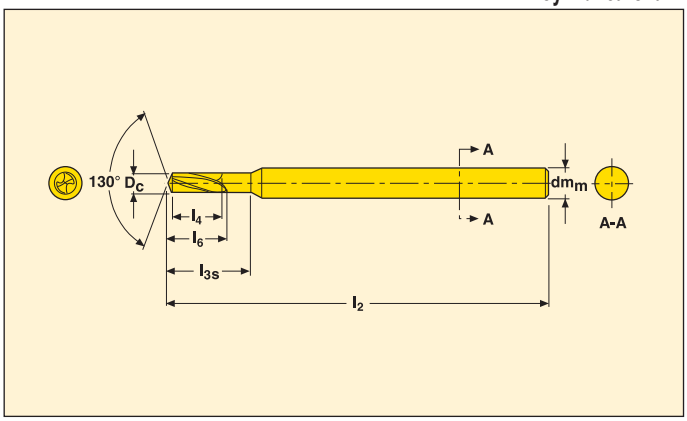

D_c	l_4	Part No.	Dimensions in mm		
			l_2	l_{3s}	dm_m
1,36	2,72	SD22-1.36-2.72-3R1	38	4,50	3
1,37	2,74	SD22-1.37-2.74-3R1	38	4,50	3
1,38	2,76	SD22-1.38-2.76-3R1	38	4,50	3
1,39	2,78	SD22-1.39-2.78-3R1	38	4,50	3
1,40	2,80	SD22-1.40-2.80-3R1	38	4,50	3
1,41	2,82	SD22-1.41-2.82-3R1	38	4,60	3
1,42	2,84	SD22-1.42-2.84-3R1	38	4,60	3
1,43	2,86	SD22-1.43-2.86-3R1	38	4,60	3
1,44	2,88	SD22-1.44-2.88-3R1	38	4,60	3
1,45	2,90	SD22-1.45-2.90-3R1	38	4,60	3
1,46	2,92	SD22-1.46-2.92-3R1	38	4,70	3
1,47	2,94	SD22-1.47-2.94-3R1	38	4,70	3
1,48	2,96	SD22-1.48-2.96-3R1	38	4,70	3
1,49	2,98	SD22-1.49-2.98-3R1	38	4,70	3
1,50	3,00	SD22-1.50-3.00-3R1	38	4,70	3
1,51	3,02	SD22-1.51-3.02-3R1	38	5,10	3
1,52	3,04	SD22-1.52-3.04-3R1	38	5,10	3
1,53	3,06	SD22-1.53-3.06-3R1	38	5,10	3
1,54	3,08	SD22-1.54-3.08-3R1	38	5,10	3
1,55	3,10	SD22-1.55-3.10-3R1	38	5,10	3
1,56	3,12	SD22-1.56-3.12-3R1	38	5,20	3
1,57	3,14	SD22-1.57-3.14-3R1	38	5,20	3
1,58	3,16	SD22-1.58-3.16-3R1	38	5,20	3
1,59	3,18	SD22-1.59-3.18-3R1	38	5,20	3
1,60	3,20	SD22-1.60-3.20-3R1	38	5,20	3
1,61	3,22	SD22-1.61-3.22-3R1	38	5,30	3
1,62	3,24	SD22-1.62-3.24-3R1	38	5,30	3
1,63	3,26	SD22-1.63-3.26-3R1	38	5,30	3
1,64	3,28	SD22-1.64-3.28-3R1	38	5,30	3
1,65	3,30	SD22-1.65-3.30-3R1	38	5,30	3
1,66	3,32	SD22-1.66-3.32-3R1	38	5,40	3
1,67	3,34	SD22-1.67-3.34-3R1	38	5,40	3
1,68	3,36	SD22-1.68-3.36-3R1	38	5,40	3
1,69	3,38	SD22-1.69-3.38-3R1	38	5,40	3
1,70	3,40	SD22-1.70-3.40-3R1	38	5,40	3
1,71	3,42	SD22-1.71-3.42-3R1	38	5,50	3
1,72	3,44	SD22-1.72-3.44-3R1	38	5,50	3
1,73	3,46	SD22-1.73-3.46-3R1	38	5,50	3
1,74	3,48	SD22-1.74-3.48-3R1	38	5,50	3
1,75	3,50	SD22-1.75-3.50-3R1	38	5,50	3
1,76	3,52	SD22-1.76-3.52-3R1	38	5,60	3
1,77	3,54	SD22-1.77-3.54-3R1	38	5,60	3

Drilling depth ~ 2 X D (Pilot drill)

Cylindrical shank



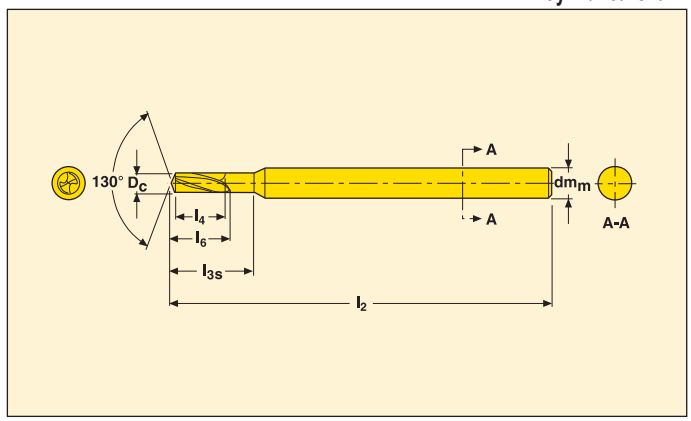

- External coolant
- For cutting and machining data see page 131-133
- Uncoated"

D_c	l_4	Part No.	Dimensions in mm		
			l_2	l_{3s}	dm_m
1,78	3,56	SD22-1.78-3.56-3R1	38	5,60	3
1,79	3,58	SD22-1.79-3.58-3R1	38	5,60	3
1,80	3,60	SD22-1.80-3.60-3R1	38	5,60	3
1,81	3,62	SD22-1.81-3.62-3R1	38	5,70	3
1,82	3,64	SD22-1.82-3.64-3R1	38	5,70	3
1,83	3,66	SD22-1.83-3.66-3R1	38	5,70	3
1,84	3,68	SD22-1.84-3.68-3R1	38	5,70	3
1,85	3,70	SD22-1.85-3.70-3R1	38	5,70	3
1,86	3,72	SD22-1.86-3.72-3R1	38	5,80	3
1,87	3,74	SD22-1.87-3.74-3R1	38	5,80	3
1,88	3,76	SD22-1.88-3.76-3R1	38	5,80	3
1,89	3,78	SD22-1.89-3.78-3R1	38	5,80	3
1,90	3,80	SD22-1.90-3.80-3R1	38	5,80	3
1,91	3,82	SD22-1.91-3.82-3R1	38	5,90	3
1,92	3,84	SD22-1.92-3.84-3R1	38	5,90	3
1,93	3,86	SD22-1.93-3.86-3R1	38	5,90	3
1,94	3,88	SD22-1.94-3.88-3R1	38	5,90	3
1,95	3,90	SD22-1.95-3.90-3R1	38	5,90	3
1,96	3,92	SD22-1.96-3.92-3R1	38	6,00	3
1,97	3,94	SD22-1.97-3.94-3R1	38	6,00	3
1,98	3,96	SD22-1.98-3.96-3R1	38	6,00	3
1,99	3,98	SD22-1.99-3.98-3R1	38	6,00	3
2,00	4,00	SD22-2.00-4.00-3R1	38	6,00	3

Drilling depth ~ 6 X D **Cylindrical shank**



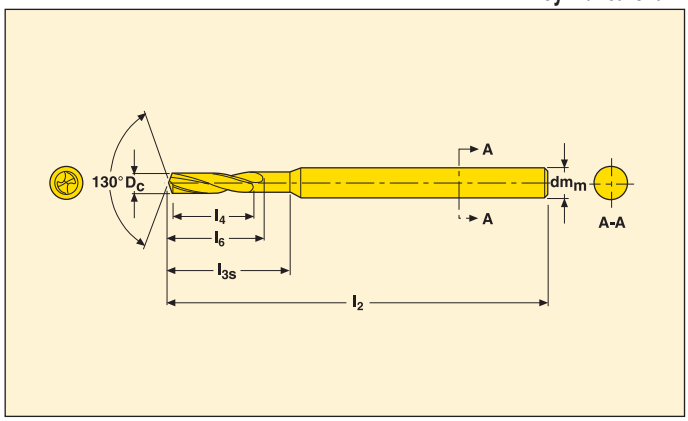

- External coolant
- For cutting and machining data see page 131-133
- Uncoated

D_c	l_4	Part No.	Dimensions in mm		
			l_2	l_{3s}	dm_m
0,10	0,40	SD26-0.10-0.40-3R1	38	0,70	3
0,11	0,40	SD26-0.11-0.40-3R1	38	0,70	3
0,12	0,40	SD26-0.12-0.40-3R1	38	0,70	3
0,13	0,65	SD26-0.13-0.65-3R1	38	1,00	3
0,14	0,65	SD26-0.14-0.65-3R1	38	1,00	3
0,15	0,90	SD26-0.15-0.65-3R1	38	1,40	3
0,16	0,90	SD26-0.16-0.90-3R1	38	1,40	3
0,17	0,90	SD26-0.17-0.90-3R1	38	1,40	3
0,18	0,90	SD26-0.18-0.90-3R1	38	1,40	3
0,19	0,90	SD26-0.19-0.90-3R1	38	1,40	3
0,20	1,25	SD26-0.20-1.25-3R1	38	1,80	3
0,21	1,25	SD26-0.21-1.25-3R1	38	1,80	3
0,22	1,25	SD26-0.22-1.25-3R1	38	1,80	3
0,23	1,25	SD26-0.23-1.25-3R1	38	1,80	3
0,24	1,25	SD26-0.24-1.25-3R1	38	1,80	3
0,25	1,55	SD26-0.25-1.55-3R1	38	2,20	3
0,26	1,55	SD26-0.26-1.55-3R1	38	2,20	3
0,27	1,55	SD26-0.27-1.55-3R1	38	2,20	3
0,28	1,55	SD26-0.28-1.55-3R1	38	2,20	3
0,29	1,55	SD26-0.29-1.55-3R1	38	2,20	3
0,30	1,80	SD26-0.30-1.80-3R1	38	2,40	3
0,31	1,80	SD26-0.31-1.80-3R1	38	2,40	3
0,32	1,80	SD26-0.32-1.80-3R1	38	2,40	3
0,33	1,80	SD26-0.33-1.80-3R1	38	2,40	3
0,34	1,80	SD26-0.34-1.80-3R1	38	2,40	3
0,35	2,20	SD26-0.35-2.20-3R1	38	2,80	3
0,36	2,20	SD26-0.36-2.20-3R1	38	2,80	3
0,37	2,20	SD26-0.37-2.20-3R1	38	2,80	3
0,38	2,20	SD26-0.38-2.20-3R1	38	2,80	3
0,39	2,70	SD26-0.39-2.70-3R1	38	3,60	3
0,40	2,70	SD26-0.40-2.70-3R1	38	3,60	3
0,41	2,70	SD26-0.41-2.70-3R1	38	3,60	3
0,42	2,70	SD26-0.42-2.70-3R1	38	3,60	3
0,43	2,70	SD26-0.43-2.70-3R1	38	3,60	3
0,44	2,70	SD26-0.44-2.70-3R1	38	3,60	3
0,45	2,70	SD26-0.45-2.70-3R1	38	3,60	3
0,46	2,70	SD26-0.46-2.70-3R1	38	3,60	3
0,47	2,70	SD26-0.47-2.70-3R1	38	3,60	3
0,48	2,70	SD26-0.48-2.70-3R1	38	3,60	3
0,49	3,20	SD26-0.49-3.20-3R1	38	4,00	3
0,50	3,20	SD26-0.50-3.20-3R1	38	4,00	3
0,51	3,20	SD26-0.51-3.20-3R1	38	4,00	3

Seco Feedmax™ – SD26

Drilling depth ~ 6 X D

Cylindrical shank



- External coolant
- For cutting and machining data see page 131-133
- Uncoated

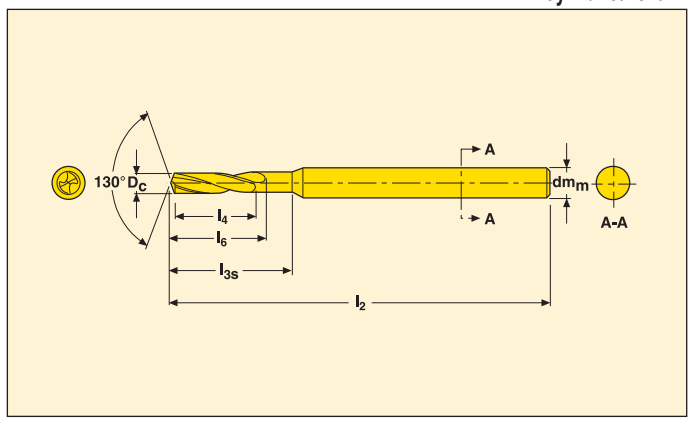

D_c	l_4	Part No.	Dimensions in mm		
			l_2	l_{3s}	dm_m
0,52	3,20	SD26-0.52-3.20-3R1	38	4,00	3
0,53	3,20	SD26-0.53-3.20-3R1	38	4,00	3
0,54	3,60	SD26-0.54-3.60-3R1	38	4,50	3
0,55	3,60	SD26-0.55-3.60-3R1	38	4,50	3
0,56	3,60	SD26-0.56-3.60-3R1	38	4,50	3
0,57	3,60	SD26-0.57-3.60-3R1	38	4,50	3
0,58	3,60	SD26-0.58-3.60-3R1	38	4,50	3
0,59	3,60	SD26-0.59-3.60-3R1	38	4,50	3
0,60	3,60	SD26-0.60-3.60-3R1	38	4,50	3
0,61	3,60	SD26-0.61-3.90-3R1	38	4,50	3
0,62	3,90	SD26-0.62-3.90-3R1	38	5,00	3
0,63	3,90	SD26-0.63-3.90-3R1	38	5,00	3
0,64	3,90	SD26-0.64-3.90-3R1	38	5,00	3
0,65	3,90	SD26-0.65-3.90-3R1	38	5,00	3
0,66	3,90	SD26-0.66-3.90-3R1	38	5,00	3
0,67	3,90	SD26-0.67-3.90-3R1	38	5,00	3
0,68	4,50	SD26-0.68-4.50-3R1	38	5,60	3
0,69	4,50	SD26-0.69-4.50-3R1	38	5,60	3
0,70	4,50	SD26-0.70-4.50-3R1	38	5,60	3
0,71	4,50	SD26-0.71-4.50-3R1	38	5,60	3
0,72	4,50	SD26-0.72-4.50-3R1	38	5,60	3
0,73	4,50	SD26-0.73-4.50-3R1	38	5,60	3
0,74	4,50	SD26-0.74-4.50-3R1	38	5,60	3
0,75	4,50	SD26-0.75-4.50-3R1	38	5,60	3
0,76	5,00	SD26-0.76-5.00-3R1	38	6,30	3
0,77	5,00	SD26-0.77-5.00-3R1	38	6,30	3
0,78	5,00	SD26-0.78-5.00-3R1	38	6,30	3
0,79	5,00	SD26-0.79-5.00-3R1	38	6,30	3
0,80	5,00	SD26-0.80-5.00-3R1	38	6,30	3
0,81	5,00	SD26-0.81-5.00-3R1	38	6,30	3
0,82	5,00	SD26-0.82-5.00-3R1	38	6,30	3
0,83	5,00	SD26-0.83-5.00-3R1	38	6,30	3
0,84	5,00	SD26-0.84-5.00-3R1	38	6,30	3
0,85	5,00	SD26-0.85-5.00-3R1	38	6,30	3
0,86	5,70	SD26-0.86-5.70-3R1	38	7,10	3
0,87	5,70	SD26-0.87-5.70-3R1	38	7,10	3
0,88	5,70	SD26-0.88-5.70-3R1	38	7,10	3
0,89	5,70	SD26-0.89-5.70-3R1	38	7,10	3
0,90	5,70	SD26-0.90-5.70-3R1	38	7,10	3
0,91	5,70	SD26-0.91-5.70-3R1	38	7,10	3
0,92	5,70	SD26-0.92-5.70-3R1	38	7,10	3
0,93	5,70	SD26-0.93-5.70-3R1	38	7,10	3

Drilling depth ~ 6 X D **Cylindrical shank**



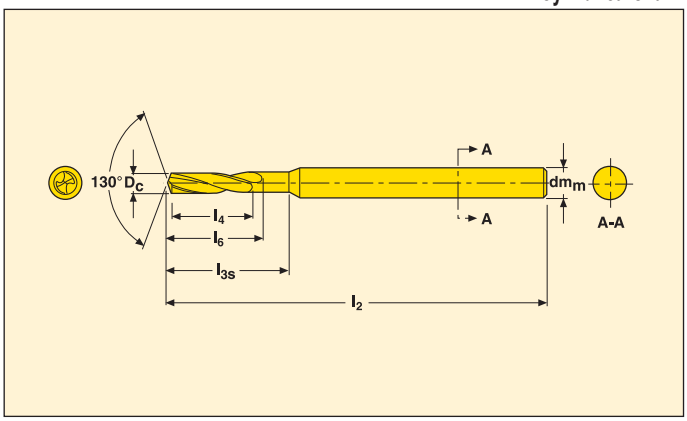

- External coolant
- For cutting and machining data see page 131-133
- Uncoated

D_c	l_4	Part No.	Dimensions in mm		
			l_2	l_{3s}	dm_m
0,94	5,70	SD26-0.94-5.70-3R1	38	7,10	3
0,95	5,70	SD26-0.95-5.70-3R1	38	7,10	3
0,96	6,50	SD26-0.96-6.50-3R1	38	8,00	3
0,97	6,50	SD26-0.97-6.50-3R1	38	8,00	3
0,98	6,50	SD26-0.98-6.50-3R1	38	8,00	3
0,99	6,50	SD26-0.99-6.50-3R1	38	8,00	3
1,00	6,50	SD26-1.00-6.50-3R1	38	8,00	3
1,01	6,50	SD26-1.01-6.50-3R1	38	8,00	3
1,02	6,50	SD26-1.02-6.50-3R1	38	8,00	3
1,03	6,50	SD26-1.03-6.50-3R1	38	8,00	3
1,04	6,50	SD26-1.04-6.50-3R1	38	8,00	3
1,05	6,50	SD26-1.05-6.50-3R1	38	8,00	3
1,06	7,30	SD26-1.06-7.30-3R1	38	9,00	3
1,07	7,30	SD26-1.07-7.30-3R1	38	9,00	3
1,08	7,30	SD26-1.08-7.30-3R1	38	9,00	3
1,09	7,30	SD26-1.09-7.30-3R1	38	9,00	3
1,10	7,30	SD26-1.10-7.30-3R1	38	9,00	3
1,11	7,30	SD26-1.11-7.30-3R1	38	9,00	3
1,12	7,30	SD26-1.12-7.30-3R1	38	9,00	3
1,13	7,30	SD26-1.13-7.30-3R1	38	9,00	3
1,14	7,30	SD26-1.14-7.30-3R1	38	9,00	3
1,15	7,30	SD26-1.15-7.30-3R1	38	9,00	3
1,16	8,20	SD26-1.16-8.20-3R1	38	10,00	3
1,17	8,20	SD26-1.17-8.20-3R1	38	10,00	3
1,18	8,20	SD26-1.18-8.20-3R1	38	10,00	3
1,19	8,20	SD26-1.19-8.20-3R1	38	10,00	3
1,20	8,20	SD26-1.20-8.20-3R1	38	10,00	3
1,21	8,20	SD26-1.21-8.20-3R1	38	10,00	3
1,22	8,20	SD26-1.22-8.20-3R1	38	10,00	3
1,23	8,20	SD26-1.23-8.20-3R1	38	10,00	3
1,24	8,20	SD26-1.24-8.20-3R1	38	10,00	3
1,25	8,20	SD26-1.25-8.20-3R1	38	10,00	3
1,26	8,20	SD26-1.26-8.20-3R1	38	10,00	3
1,27	8,20	SD26-1.27-8.20-3R1	38	10,00	3
1,28	8,20	SD26-1.28-8.20-3R1	38	10,00	3
1,29	8,20	SD26-1.29-8.20-3R1	38	10,00	3
1,30	8,20	SD26-1.30-8.20-3R1	38	10,00	3
1,31	9,20	SD26-1.31-9.20-3R1	38	11,20	3
1,32	9,20	SD26-1.32-9.20-3R1	38	11,20	3
1,33	9,20	SD26-1.33-9.20-3R1	38	11,20	3
1,34	9,20	SD26-1.34-9.20-3R1	38	11,20	3
1,35	9,20	SD26-1.35-9.20-3R1	38	11,20	3

Drilling depth ~ 6 X D

Cylindrical shank



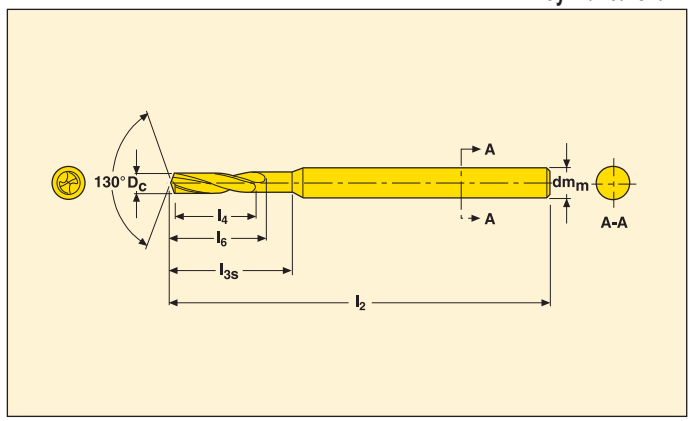

- External coolant
- For cutting and machining data see page 131-133
- Uncoated

D_c	l_4	Part No.	Dimensions in mm		
			l_2	l_{3s}	dm_m
1,36	9,20	SD26-1.36-9.20-3R1	38	11,20	3
1,37	9,20	SD26-1.37-9.20-3R1	38	11,20	3
1,38	9,20	SD26-1.38-9.20-3R1	38	11,20	3
1,39	9,20	SD26-1.39-9.20-3R1	38	11,20	3
1,40	9,20	SD26-1.40-9.20-3R1	38	11,20	3
1,41	9,20	SD26-1.41-9.20-3R1	38	11,20	3
1,42	9,20	SD26-1.42-9.20-3R1	38	11,20	3
1,43	9,20	SD26-1.43-9.20-3R1	38	11,20	3
1,44	9,20	SD26-1.44-9.20-3R1	38	11,20	3
1,45	9,20	SD26-1.45-9.20-3R1	38	11,20	3
1,46	9,20	SD26-1.46-9.20-3R1	38	11,20	3
1,47	9,20	SD26-1.47-9.20-3R1	38	11,20	3
1,48	9,20	SD26-1.48-9.20-3R1	38	11,20	3
1,49	9,20	SD26-1.49-9.20-3R1	38	11,20	3
1,50	9,20	SD26-1.50-9.20-3R1	38	11,20	3
1,51	11,20	SD26-1.51-11.20-3R1	38	13,40	3
1,52	11,20	SD26-1.52-11.20-3R1	38	13,40	3
1,53	11,20	SD26-1.53-11.20-3R1	38	13,40	3
1,54	11,20	SD26-1.54-11.20-3R1	38	13,40	3
1,55	11,20	SD26-1.55-11.20-3R1	38	13,40	3
1,56	11,20	SD26-1.56-11.20-3R1	38	13,40	3
1,57	11,20	SD26-1.57-11.20-3R1	38	13,40	3
1,58	11,20	SD26-1.58-11.20-3R1	38	13,40	3
1,59	11,20	SD26-1.59-11.20-3R1	38	13,40	3
1,60	11,20	SD26-1.60-11.20-3R1	38	13,40	3
1,61	11,20	SD26-1.61-11.20-3R1	38	13,40	3
1,62	11,20	SD26-1.62-11.20-3R1	38	13,40	3
1,63	11,20	SD26-1.63-11.20-3R1	38	13,40	3
1,64	11,20	SD26-1.64-11.20-3R1	38	13,40	3
1,65	11,20	SD26-1.65-11.20-3R1	38	13,40	3
1,66	11,20	SD26-1.66-11.20-3R1	38	13,40	3
1,67	11,20	SD26-1.67-11.20-3R1	38	13,40	3
1,68	11,20	SD26-1.68-11.20-3R1	38	13,40	3
1,69	11,20	SD26-1.69-11.20-3R1	38	13,40	3
1,70	11,20	SD26-1.70-11.20-3R1	38	13,40	3
1,71	11,20	SD26-1.71-11.20-3R1	38	13,40	3
1,72	11,20	SD26-1.72-11.20-3R1	38	13,40	3
1,73	11,20	SD26-1.73-11.20-3R1	38	13,40	3
1,74	11,20	SD26-1.74-11.20-3R1	38	13,40	3
1,75	11,20	SD26-1.75-11.20-3R1	38	13,40	3
1,76	11,20	SD26-1.76-11.20-3R1	38	13,40	3
1,77	11,20	SD26-1.77-11.20-3R1	38	13,40	3

Seco Feedmax™ – SD26

Drilling depth ~ 6 X D

Cylindrical shank



- External coolant
- For cutting and machining data see page 131-133
- Uncoated

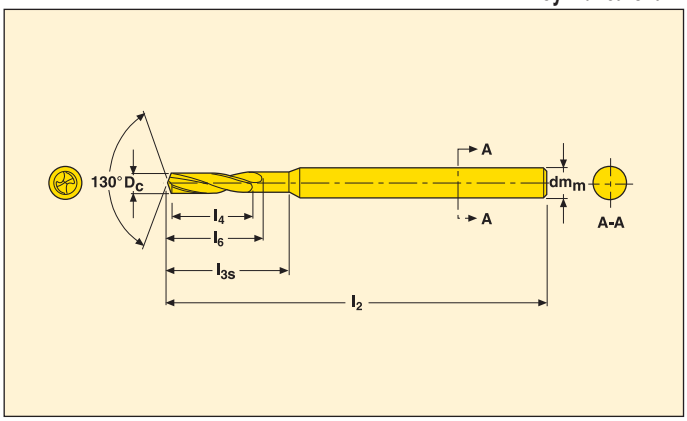

D_c	l_4	Part No.	Dimensions in mm		
			l_2	l_{3s}	dm_m
1,78	11,20	SD26-1.78-11.20-3R1	38	13,40	3
1,79	11,20	SD26-1.79-11.20-3R1	38	13,40	3
1,80	11,20	SD26-1.80-11.20-3R1	38	13,40	3
1,81	11,20	SD26-1.81-11.20-3R1	38	13,40	3
1,82	11,20	SD26-1.82-11.20-3R1	38	13,40	3
1,83	11,20	SD26-1.83-11.20-3R1	38	13,40	3
1,84	11,20	SD26-1.84-11.20-3R1	38	13,40	3
1,85	11,20	SD26-1.85-11.20-3R1	38	13,40	3
1,86	11,20	SD26-1.86-11.20-3R1	38	13,40	3
1,87	11,20	SD26-1.87-11.20-3R1	38	13,40	3
1,88	11,20	SD26-1.88-11.20-3R1	38	13,40	3
1,89	11,20	SD26-1.89-11.20-3R1	38	13,40	3
1,90	11,20	SD26-1.90-11.20-3R1	38	13,40	3
1,91	11,20	SD26-1.91-11.20-3R1	38	13,40	3
1,92	11,20	SD26-1.92-11.20-3R1	38	13,40	3
1,93	11,20	SD26-1.93-11.20-3R1	38	13,40	3
1,94	11,20	SD26-1.94-11.20-3R1	38	13,40	3
1,95	11,20	SD26-1.95-11.20-3R1	38	13,40	3
1,96	11,20	SD26-1.96-11.20-3R1	38	13,40	3
1,97	11,20	SD26-1.97-11.20-3R1	38	13,40	3
1,98	11,20	SD26-1.98-11.20-3R1	38	13,40	3
1,99	11,20	SD26-1.99-11.20-3R1	38	13,40	3
2,00	11,20	SD26-2.00-11.20-3R1	38	13,40	3

Custom design – No waiting for quotations! Price and delivery time available instantly!

A well defined strategy has been created for the total process for custom-made drills from quotation to finished drill. You can now design your own customised Seco Feedmax™ drill using the Custom Design software.

The concept gives you a number of advantages:

- No waiting for quotations! price and delivery time available instantly
- Directly visualises your needs. No risk of misunderstandings
- Short delivery time

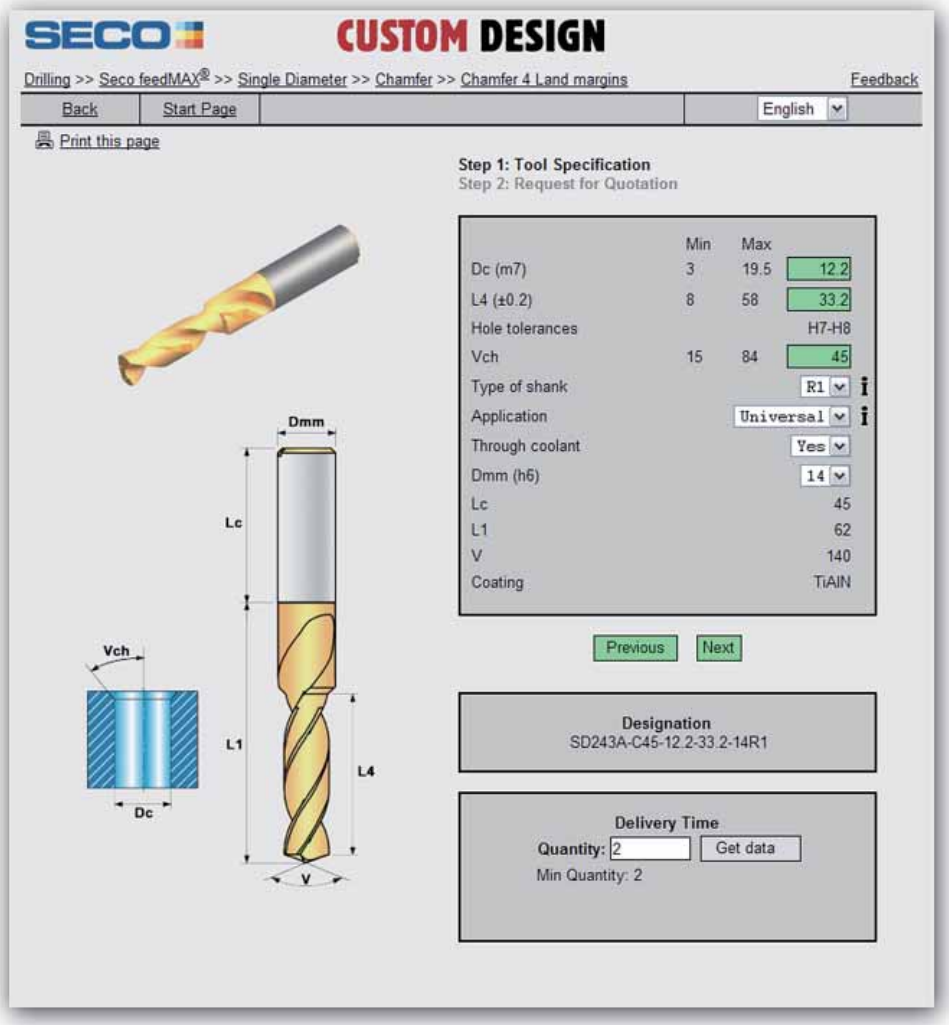

Please contact your local Seco representative for more information.

Different types of custom drills – Detailed information can be found in the Custom Design software

A1. Single diameter



A2. Reinforced



A3. Chamfer

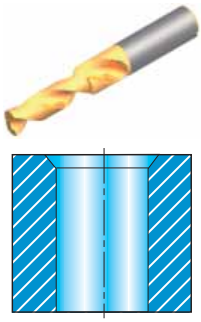

B1. Counterbore

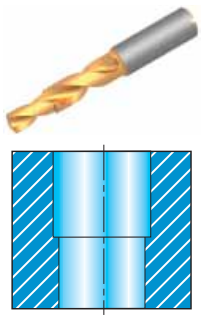

B2. Counterbore and chamfer

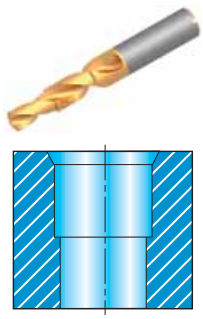

B3. Step

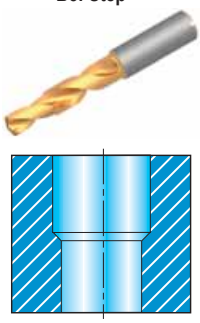

B4. Step and chamfer

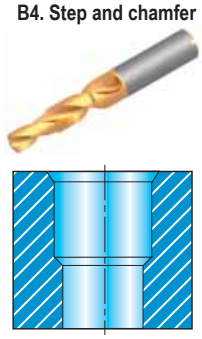

Machining data

Net power consumption

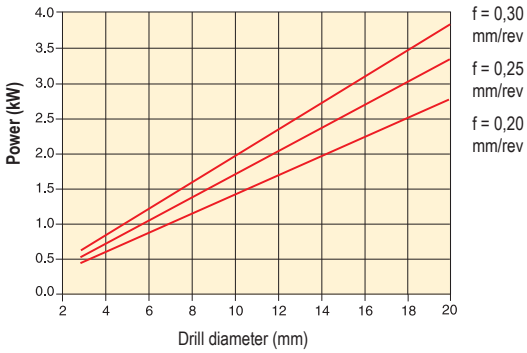

Coolant flow at different pressures

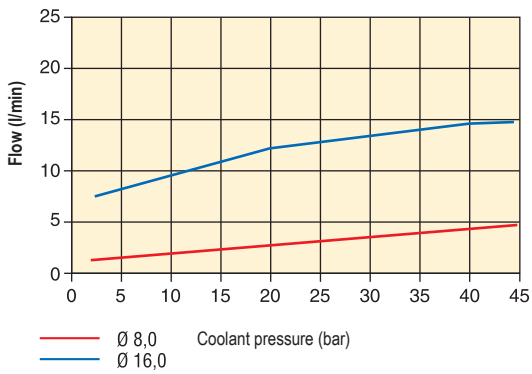

Feed force

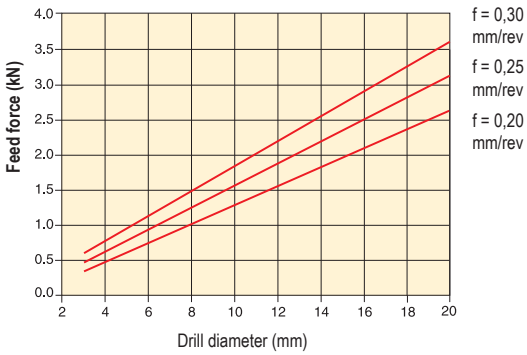

Method

Adjust feed up or down to obtain as good chip formation as possible. Increased feed/rev. gives shorter chips.

The values showing feed force and net power consumption above are basic values and vary with type of cutting data, material and tool wear.

Machining data

SD1103, SD1103A, SD1105A, SD203, SD203A, SD205A, SD206, SD206A, SD207A, SD216A, SD230A IT8–9/Ra 1–3*		
Drill ∅ D_c (mm)	IT9 tolerance (µm)	IT10 tolerance (µm)
<3	14	25
3-6	18	30
6-10	22	36
10-18	27	43
> 18	33	52

*Deterioration of surface finish can occur when drilling in low carbon steel or stainless steel.

Troubleshooting – Initial check points:

- Fixturing stability
- Machine spindle condition
- Tool holder condition
- Clamping of tool:
  - Run-out within 0,04 TIR
  - If using pre drilling within 0,04 TIR
- Chip evacuation:
  - Cutting data
- Coolant:
  - Pressure
  - Flow
  - Concentration

Rapid flank wear

- Reduce the cutting speed
- Increase coolant concentration



Unsatisfactory diameter tolerance

- Increase the feed/rev
- Use a reaming operation, see page 317
- Use a boring operation, see page 481-482

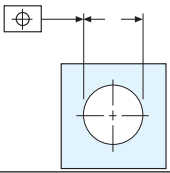

Wear / Periphery land

- Reduce the cutting speed
- Increase coolant concentration



Unsatisfactory positioning of the hole

- Reduce fee/rev. on entrance
- Reduce feed/rev
- Use a boring operation, see pages 481-482
- If drilling through rough, hard and angled surfaces - reduce the feed by 30%-50% during entrance and exit
- Centre drill with a 140° point angle

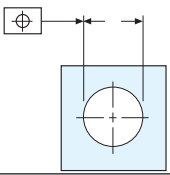

Chipping / Centre

- Reduce feed during entrance
- Increase coolant pressure and adjust the feed to optimize the chip formation



Unsatisfactory surface finish

- Reduce the feed/rev
- Increase the cutting speed
- Use a remaining operation, see page 317

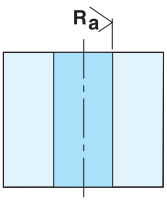

Chipping / Outer corner, cutting edge

- Reduce feed during entrance/exit
- Reduce the cutting speed
- Increase coolant concentration
- Regrind the drill



Burrs on exit

- Reduce the feed/rev. on exit
- Reduce the width of edge preparation (b_n)

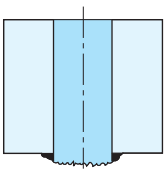

Built-up edge

- If closer to the periphery increase the cutting speed
- If closer to centre increase feed/rev
- If the drill is worn, regrind it



Breakage on contact / at hole bottom

- Reduce the feed/rev. during entrance/exit
- Adjust cutting data for improved chip evacuation

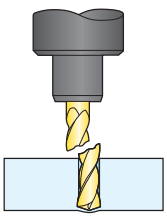

Troubleshooting

Hole exit

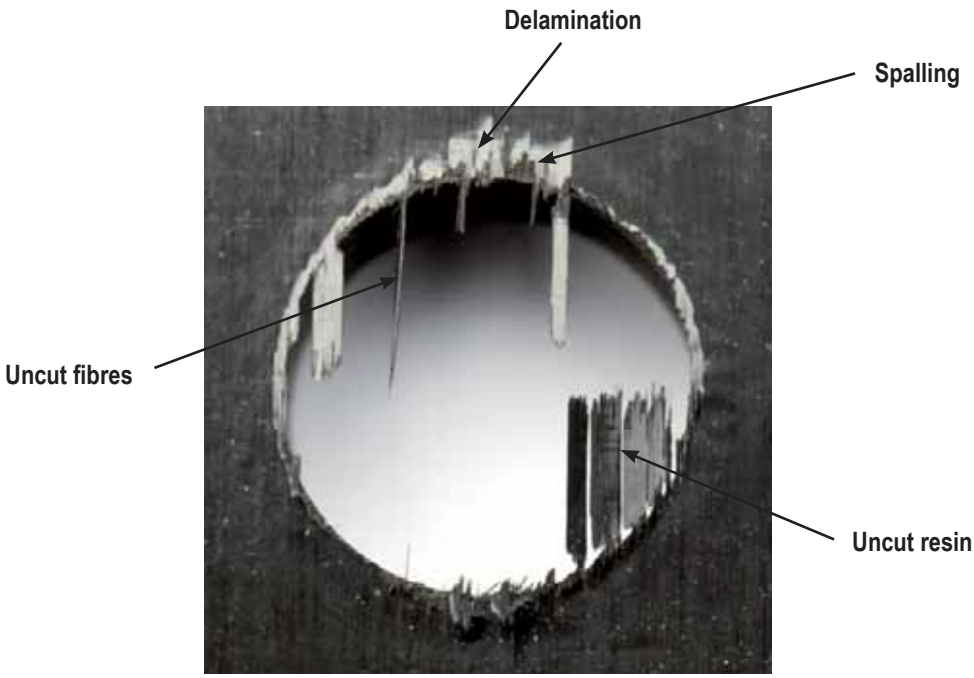

Problem:	Delamination (peel up / push down)	Spalling	Uncut fibres	Uncut resin
Solution:	**Peel up** • Use tool with more negative geometry • Reduce feed/rev.	• Use tool with more positive geometry • Reduce feed/rev.	• Use tool with a sharper geometry • Reduce feed/rev.	• Use tool with a sharper geometry • Reduce feed/rev. • Reduce cutting speed
	Push down • Reduce feed/rev.			
Problem:	**Melted resin Too much heat**	**Poor tool life**		
Solution:	• Reduce cutting speed	• Reduce cutting speed		

Regrinding instructions for SD1103, SD1103A and SD1105A

1. Four facet point

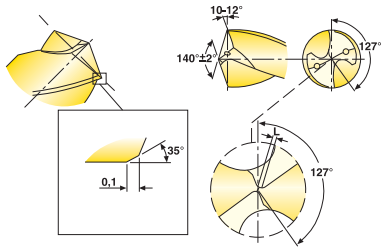

Lip height distance (axial run-out) to be within 0,02 mm

2. Web thinning

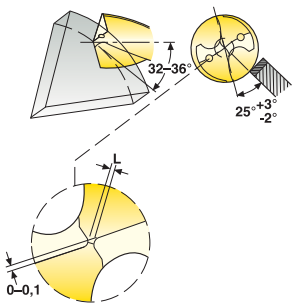

Drill ∅ D_c (mm)	L (mm)
2-10	0,1-0,3
10-20	0,2-0,4

3. Grinding of flat X

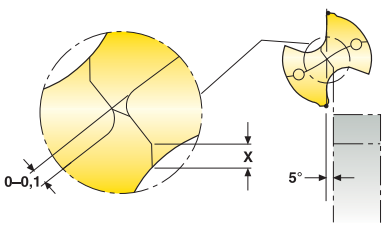

X = 0,08 x drill diameter D_c

4. Edge preparation

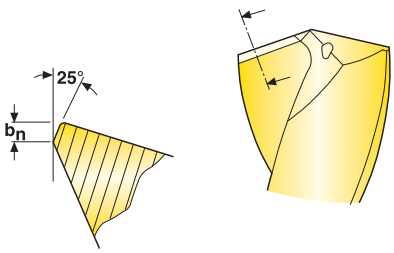

Workpiece material	b_n (mm)	
	Drill ∅ ≤10 (mm)	Drill ∅ >10 (mm)
Steel	0,05	0,10
Stainless steel	0,05	0,05
Cast iron	0,05	0,10

Max. allowed flank wear before regrinding is 0,1–0,3 mm measured at the largest point.

Specifications

Proposed specification of diamond wheels:

Conical clearance: Wheel shape12A2 Grit size D54 (picture 1).
Gashing: Wheel shape 1A1 or 1V1 Grit size D64-D46 (picture 2-3).
Corner chamfer: Wheel shape 1A1 or 12A2 (picture 1).
Edge treatment: grinding K-land or brushing (picture 4).

Important:

- The cutting edges must be uniform and have the same size of edge preparation.
- The edge preparation must be applied on the whole length of the cutting edges.

Regrinding instructions for SD203, SD203A, SD205A and SD207A

1. Conical flank

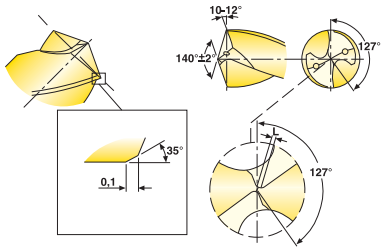

Lip height distance (axial run-out) to be within 0,02 mm

2. Web thinning

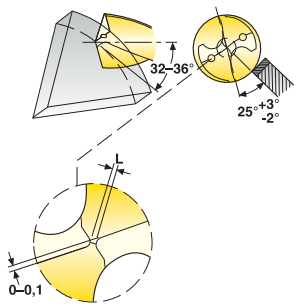

Drill ∅ D_c (mm)	L (mm)
2-10	0,1-0,3
10-20	0,2-0,4

3. Grinding of flat X

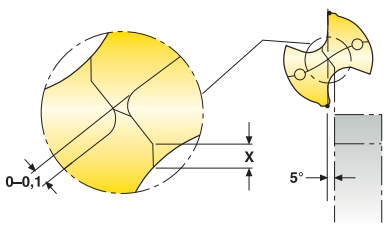

X = 0,08 x drill diameter D_c

4. Edge preparation

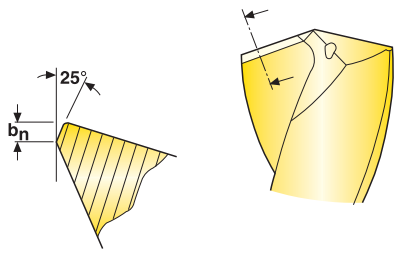

Workpiece material	b_n (mm)	
	Drill ∅ ≤10 (mm)	Drill ∅ >10 (mm)
Steel	0,05	0,10
Stainless steel	0,05	0,05
Cast iron	0,05	0,10

Max. allowed flank wear before regrinding is 0,1–0,3 mm measured at the largest point.

Specifications

Proposed specification of diamond wheels:

Conical clearance: Wheel shape12A2 Grit size D54 (picture 1).
Gashing: Wheel shape 1A1 or 1V1 Grit size D64-D46 (picture 2-3).
Corner chamfer: Wheel shape 1A1 or 12A2 (picture 1).
Edge treatment: grinding K-land or brushing (picture 4).

Important:

- The cutting edges must be uniform and have the same size of edge preparation.
- The edge preparation must be applied on the whole length of the cutting edges.

Regrinding instructions for chamfer drills

The regrinding instructions are the same as for SD203, SD203A, SD205A and SD207A except for the chamfer.

1. Chamfer relief

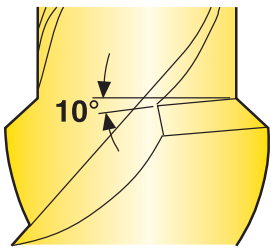

2. Edge preparation, chamfer

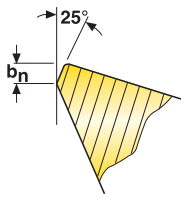

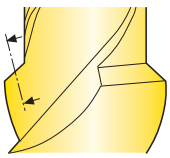

Workpiece material	b_n (mm)	
	Drill ∅ ≤10 (mm)	Drill ∅ >10 (mm)
Steel	0,05	0,05
Stainless steel	0,05	0,05
Cast iron	0,05	0,05

Regrinding instructions for SD212A, SD216A, SD220A, SD225A and SD230A geometry

1. Conical flank

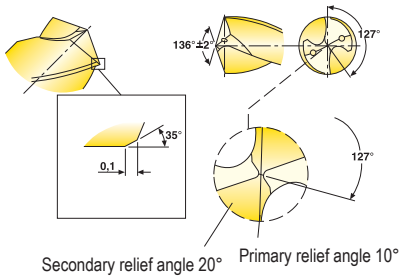

Lip height distance (axial run-out) to be within 0,02 mm

2. Web thinning

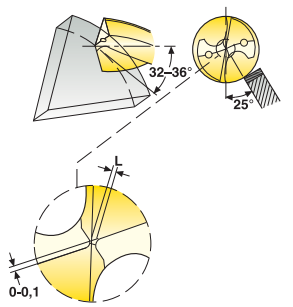

Drill ∅ D_c (mm)	L (mm)
2-10	0,2
10-20	0,4

3. Grinding of flat X

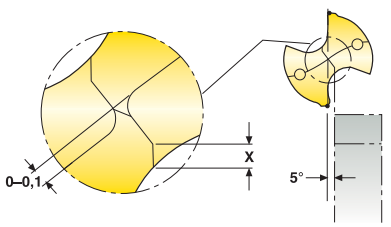

X = 0,08 x drill diameter D_c

4. Edge preparation

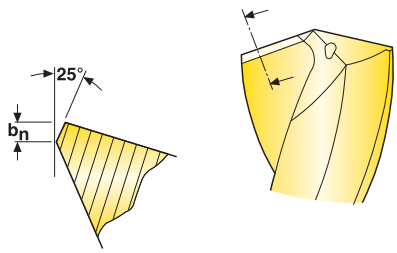

Workpiece material	b_n (mm)	
	Drill ∅ ≤10 (mm)	Drill ∅ >10 (mm)
Steel	0,05	0,1
Stainless steel	0,05	0,05
Cast iron	0,05	0,1

Max. allowed flank wear before regrinding is 0,1–0,3 mm measured at the largest point.

Specifications

Proposed specification of diamond wheels:

Point relief: wheel shape 11V9 grit size D54 (picture 1).
Gashing: Wheel shape 1A1 or 1V1 Grit size D64-D46 (picture 2-3).
Corner chamfer: Wheel shape 1A1 or 12A2 (picture 1).
Edge treatment: grinding K-land or brushing (picture 4).

Important:

- The cutting edges must be uniform and have the same size of edge preparation.
- The edge preparation must be applied on the whole length of the cutting edges.

Regrinding instructions for SD265A

1. Conical flank

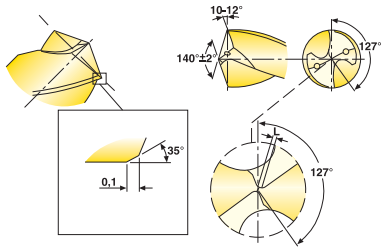

Lip height distance (axial run-out) to be within 0,02 mm

2. Web thinning

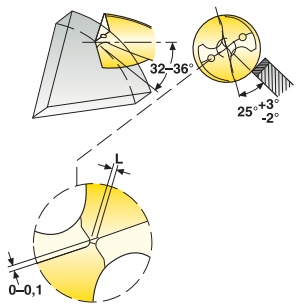

Drill ∅ D_c (mm)	L (mm)
2-10	0,1-0,3
10-20	0,2-0,4

3. Grinding of flat X

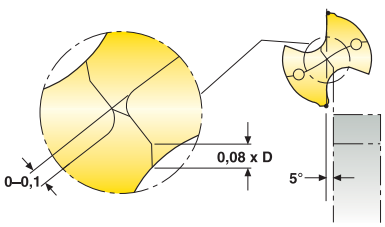

4. Edge preparation

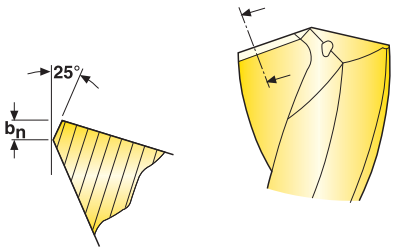

Workpiece material	Drill ∅ ≤10 (mm)	Drill ∅ >10 (mm)
Steel	0,05	0,10
Stainless steel	0,05	0,05
Cast iron	0,05	0,10

Max. allowed flank wear before regrinding is 0,1–0,3 mm measured at the largest point.

Specifications

Proposed specification of diamond wheels:

Conical clearance: Wheel shape12A2 Grit size D54 (picture 1).
Gashing: Wheel shape 1A1 or 1V1 Grit size D64-D46 (picture 2-3).
Corner chamfer: Wheel shape 1A1 or 12A2 (picture 1).
Edge treatment: grinding K-land or brushing (picture 4).

Important:

- The cutting edges must be uniform and have the same size of edge preparation.
- The edge preparation must be applied on the whole length of the cutting edges.

Regrinding instructions for -M and -T geometry

1. Conical flank

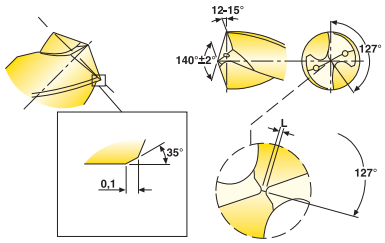

Lip height distance (axial run-out) to be within 0,01 mm

2. Web thinning

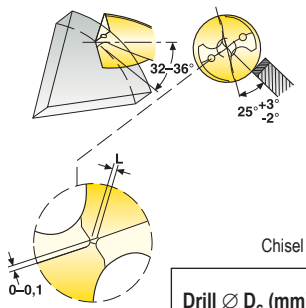

Chisel edge length L

Drill ∅ D_c (mm)	L (mm)
3-6	0,1-0,2
6-10	0,13-0,27
10-20	0,2-0,4

3. Grinding of flat X

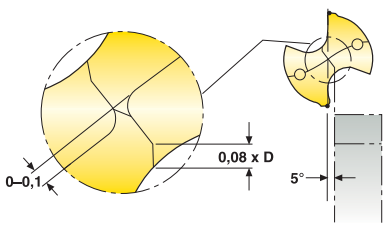

4. Edge preparation

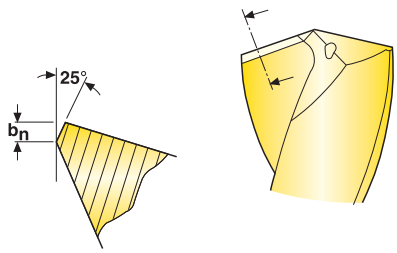

b_n = 0,02

Max. allowed flank wear before regrinding is 0,1–0,3 mm measured at the largest point.

Specifications

Proposed specification of diamond wheels:

Conical clearance: Wheel shape12A2 Grit size D54 (picture 1).
Gashing: Wheel shape 1A1 or 1V1 Grit size D64-D46 (picture 2-3).
Corner chamfer: Wheel shape 1A1 or 12A2 (picture 1).
Edge treatment: grinding K-land or brushing (picture 4).

Important:

- The cutting edges must be uniform and have the same size of edge preparation.
- The edge preparation must be applied on the whole length of the cutting edges.

Regrinding instructions for -N geometry

1. Conical flank

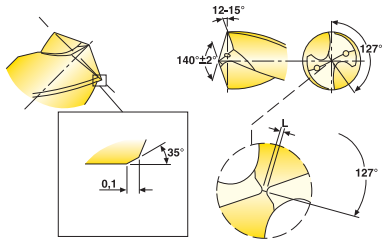

Lip height distance (axial run-out) to be within 0,01 mm

2. Web thinning

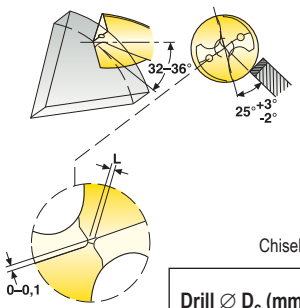

Chisel edge length L

Drill ∅ D_c (mm)	L (mm)
3-6	0,1-0,2
6-10	0,13-0,27
10-20	0,2-0,4

3. Grinding of flat X

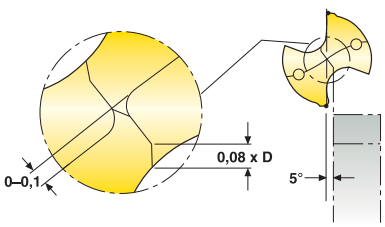

X = 0,08 x drill diameter D_c

4. Edge preparation

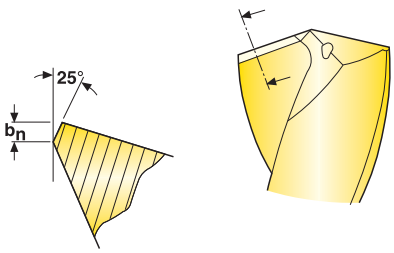

b_n = 0,01-0,02

Max. allowed flank wear before regrinding is 0,1–0,3 mm measured at the largest point.

Specifications

Proposed specification of diamond wheels:

Conical clearance: Wheel shape12A2 Grit size D54 (picture 1).
Gashing: Wheel shape 1A1 or 1V1 Grit size D64-D46 (picture 2-3).
Corner chamfer: Wheel shape 1A1 or 12A2 (picture 1).
Edge treatment: grinding K-land or brushing (picture 4).

Important:

- The cutting edges must be uniform and have the same size of edge preparation.
- The edge preparation must be applied on the whole length of the cutting edges.

Cutting data – SD1103 – Ø3-20

	f										
SMG	Ø3,00	Ø4,00	Ø6,00	Ø8,00	Ø10,00	Ø12,00	Ø14,00	Ø16,00	Ø18,00	Ø20,00	v_c
P1	0,12	0,14	0,18	0,22	0,26	0,28	0,30	0,32	0,34	0,36	105
P2	0,12	0,14	0,18	0,22	0,26	0,28	0,30	0,32	0,34	0,36	105
P3	0,11	0,13	0,17	0,20	0,24	0,26	0,30	0,32	0,32	0,34	90
P4	0,11	0,13	0,17	0,20	0,24	0,26	0,28	0,30	0,32	0,34	80
P5	0,11	0,13	0,16	0,20	0,24	0,26	0,28	0,30	0,32	0,34	75
P6	0,11	0,13	0,16	0,20	0,22	0,26	0,28	0,30	0,32	0,32	85
P7	0,11	0,13	0,16	0,20	0,22	0,26	0,28	0,30	0,32	0,32	80
P8	0,11	0,13	0,17	0,20	0,24	0,26	0,30	0,32	0,32	0,34	75
P11	0,11	0,13	0,16	0,20	0,22	0,26	0,28	0,30	0,32	0,32	75
M1	0,12	0,14	0,18	0,22	0,26	0,28	0,30	0,32	0,34	0,36	55
M2	0,11	0,13	0,16	0,20	0,24	0,26	0,28	0,30	0,32	0,34	45
K1	0,12	0,14	0,18	0,22	0,26	0,28	0,30	0,32	0,34	0,36	70
K2	0,11	0,13	0,16	0,20	0,24	0,26	0,28	0,30	0,32	0,34	60
K3	0,11	0,13	0,16	0,20	0,24	0,26	0,28	0,30	0,32	0,34	50
K4	0,11	0,13	0,16	0,20	0,24	0,26	0,28	0,30	0,32	0,34	49
K5	0,10	0,12	0,15	0,18	0,20	0,24	0,26	0,26	0,28	0,30	29
H3	0,050	0,060	0,075	0,090	0,10	0,12	0,13	0,13	0,14	0,15	24
H5	0,075	0,085	0,11	0,14	0,16	0,18	0,19	0,20	0,22	0,22	45
H7	0,050	0,060	0,075	0,090	0,10	0,12	0,13	0,13	0,14	0,15	24
H8	0,055	0,065	0,085	0,10	0,12	0,13	0,15	0,16	0,16	0,17	45
H11	0,075	0,085	0,11	0,14	0,16	0,18	0,19	0,20	0,22	0,22	60
H12	0,075	0,085	0,11	0,14	0,16	0,18	0,19	0,20	0,22	0,22	95

Cutting data – SD110XA – Ø3-20

	f										
SMG	Ø3,00	Ø4,00	Ø6,00	Ø8,00	Ø10,00	Ø12,00	Ø14,00	Ø16,00	Ø18,00	Ø20,00	v_c
P1	0,12	0,14	0,18	0,22	0,26	0,28	0,30	0,32	0,34	0,36	140
P2	0,12	0,14	0,18	0,22	0,26	0,28	0,30	0,32	0,34	0,36	140
P3	0,11	0,13	0,17	0,20	0,24	0,26	0,30	0,32	0,32	0,34	120
P4	0,11	0,13	0,17	0,20	0,24	0,26	0,28	0,30	0,32	0,34	105
P5	0,11	0,13	0,16	0,20	0,24	0,26	0,28	0,30	0,32	0,34	100
P6	0,11	0,13	0,16	0,20	0,22	0,26	0,28	0,30	0,32	0,32	110
P7	0,11	0,13	0,16	0,20	0,22	0,26	0,28	0,30	0,32	0,32	105
P8	0,11	0,13	0,17	0,20	0,24	0,26	0,30	0,32	0,32	0,34	100
P11	0,11	0,13	0,16	0,20	0,22	0,26	0,28	0,30	0,32	0,32	105
M1	0,12	0,14	0,18	0,22	0,26	0,28	0,30	0,32	0,34	0,36	75
M2	0,11	0,13	0,16	0,20	0,24	0,26	0,28	0,30	0,32	0,34	60
K1	0,12	0,14	0,18	0,22	0,26	0,28	0,30	0,32	0,34	0,36	90
K2	0,11	0,13	0,16	0,20	0,24	0,26	0,28	0,30	0,32	0,34	80
K3	0,11	0,13	0,16	0,20	0,24	0,26	0,28	0,30	0,32	0,34	65
K4	0,11	0,13	0,16	0,20	0,24	0,26	0,28	0,30	0,32	0,34	65
K5	0,10	0,12	0,15	0,18	0,20	0,24	0,26	0,26	0,28	0,30	37
H3	0,050	0,060	0,075	0,090	0,10	0,12	0,13	0,13	0,14	0,15	33
H5	0,075	0,085	0,11	0,14	0,16	0,18	0,19	0,20	0,22	0,22	60
H7	0,050	0,060	0,075	0,090	0,10	0,12	0,13	0,13	0,14	0,15	33
H8	0,055	0,065	0,085	0,10	0,12	0,13	0,15	0,16	0,16	0,17	60
H11	0,075	0,085	0,11	0,14	0,16	0,18	0,19	0,20	0,22	0,22	75
H12	0,075	0,085	0,11	0,14	0,16	0,18	0,19	0,20	0,22	0,22	125

SMG = Seco material group
f = mm/rev
v_c= m/min
All cutting data are start values

Cutting data – SD203 – Ø2-8

SMG		f						v_c
		Ø2,00	Ø3,00	Ø4,00	Ø5,00	Ø6,00	Ø8,00	
P1	P	0,11	0,13	0,16	0,18	0,20	0,24	140
P2	P	0,11	0,14	0,16	0,18	0,20	0,26	140
P3	P	0,11	0,13	0,15	0,17	0,19	0,24	120
P4	P	0,10	0,13	0,15	0,17	0,19	0,24	105
P5	P	0,10	0,12	0,14	0,17	0,19	0,22	100
P6	P	0,10	0,12	0,14	0,16	0,19	0,22	110
P7	P	0,10	0,12	0,14	0,16	0,19	0,22	105
P8	P	0,11	0,13	0,15	0,17	0,19	0,24	100
P11	P	0,10	0,12	0,14	0,16	0,19	0,22	105
K1	P	0,11	0,14	0,16	0,18	0,20	0,26	100
K2	P	0,10	0,12	0,14	0,17	0,19	0,22	85
K3	P	0,10	0,12	0,14	0,17	0,19	0,22	75
K4	P	0,10	0,12	0,14	0,17	0,19	0,22	70
K5	P	0,090	0,11	0,13	0,15	0,17	0,20	42

Cutting data – SD203 – Ø10-20

SMG		f						v_c
		Ø10,00	Ø12,00	Ø14,00	Ø16,00	Ø18,00	Ø20,00	
P1	P	0,28	0,32	0,36	0,38	0,40	0,42	140
P2	P	0,30	0,32	0,36	0,38	0,40	0,42	140
P3	P	0,28	0,32	0,34	0,36	0,38	0,40	120
P4	P	0,28	0,30	0,34	0,36	0,38	0,40	105
P5	P	0,26	0,30	0,32	0,34	0,36	0,38	100
P6	P	0,26	0,30	0,32	0,34	0,36	0,38	110
P7	P	0,26	0,30	0,32	0,34	0,36	0,38	105
P8	P	0,28	0,32	0,34	0,36	0,38	0,40	100
P11	P	0,26	0,30	0,32	0,34	0,36	0,38	105
K1	P	0,30	0,32	0,36	0,38	0,40	0,42	100
K2	P	0,26	0,30	0,32	0,34	0,36	0,38	85
K3	P	0,26	0,30	0,32	0,34	0,36	0,38	75
K4	P	0,26	0,30	0,32	0,34	0,36	0,38	70
K5	P	0,24	0,26	0,30	0,32	0,34	0,34	42

SMG = Seco material group
f = mm/rev
v_c= m/min
All cutting data are start values

Cutting data – SD203A – Ø2-8

SMG		f						v_c
		Ø2,00	Ø3,00	Ø4,00	Ø5,00	Ø6,00	Ø8,00	
P1	P	0,11	0,13	0,16	0,18	0,20	0,24	205
P2	P	0,11	0,14	0,16	0,18	0,20	0,26	200
P3	P	0,11	0,13	0,15	0,17	0,19	0,24	175
P4	P	0,10	0,13	0,15	0,17	0,19	0,24	150
P5	P	0,10	0,12	0,14	0,17	0,19	0,22	145
P6	P	0,10	0,12	0,14	0,16	0,19	0,22	165
P7	P	0,10	0,12	0,14	0,16	0,19	0,22	155
P8	P	0,11	0,13	0,15	0,17	0,19	0,24	145
P11	P	0,10	0,12	0,14	0,16	0,19	0,22	150
M1	M	0,075	0,095	0,11	0,13	0,15	0,19	110
M2	M	0,065	0,085	0,10	0,12	0,14	0,17	90
M3	M	0,055	0,065	0,080	0,095	0,11	0,14	70
M4	M	0,048	0,060	0,070	0,085	0,095	0,12	50
M5	M	0,048	0,060	0,070	0,085	0,095	0,12	42
K1	P	0,11	0,14	0,16	0,18	0,20	0,26	100
K2	P	0,10	0,12	0,14	0,17	0,19	0,22	85
K3	P	0,10	0,12	0,14	0,17	0,19	0,22	75
K4	P	0,10	0,12	0,14	0,17	0,19	0,22	70
K5	P	0,090	0,11	0,13	0,15	0,17	0,20	42
N1	N	0,13	0,16	0,19	0,22	0,26	0,32	350
N2	M	0,095	0,12	0,14	0,17	0,19	0,24	225
N3	M	0,095	0,12	0,14	0,17	0,19	0,24	150
N11	M	0,095	0,12	0,14	0,17	0,19	0,24	285
S1	M	0,048	0,060	0,070	0,085	0,095	0,12	39
S2	M	0,048	0,060	0,070	0,085	0,095	0,12	28
S3	M	0,044	0,055	0,065	0,075	0,090	0,11	28
S11	M	0,055	0,065	0,080	0,095	0,11	0,14	70
S12	M	0,055	0,065	0,080	0,095	0,11	0,14	55
S13	M	0,048	0,060	0,070	0,085	0,095	0,12	43
H3	P	0,046	0,055	0,065	0,075	0,085	0,10	36
H5	P	0,070	0,085	0,10	0,11	0,13	0,16	65
H7	P	0,046	0,055	0,065	0,075	0,085	0,10	36
H8	P	0,055	0,065	0,075	0,085	0,095	0,12	65
H11	P	0,070	0,085	0,10	0,11	0,13	0,16	85
H12	P	0,070	0,085	0,10	0,11	0,13	0,16	140
H21	P	0,055	0,065	0,075	0,085	0,095	0,12	65

SMG = Seco material group
f = mm/rev
v_c= m/min
All cutting data are start values

Cutting data – SD203A – Ø10-20

SMG		f						v_c
		Ø10,00	Ø12,00	Ø14,00	Ø16,00	Ø18,00	Ø20,00	
P1	P	0,28	0,32	0,36	0,38	0,40	0,42	205
P2	P	0,30	0,32	0,36	0,38	0,40	0,42	200
P3	P	0,28	0,32	0,34	0,36	0,38	0,40	175
P4	P	0,28	0,30	0,34	0,36	0,38	0,40	150
P5	P	0,26	0,30	0,32	0,34	0,36	0,38	145
P6	P	0,26	0,30	0,32	0,34	0,36	0,38	165
P7	P	0,26	0,30	0,32	0,34	0,36	0,38	155
P8	P	0,28	0,32	0,34	0,36	0,38	0,40	145
P11	P	0,26	0,30	0,32	0,34	0,36	0,38	150
M1	M	0,22	0,24	0,28	0,30	0,30	0,32	110
M2	M	0,20	0,22	0,24	0,26	0,28	0,30	90
M3	M	0,16	0,18	0,20	0,22	0,22	0,24	70
M4	M	0,14	0,16	0,17	0,19	0,20	0,20	50
M5	M	0,14	0,16	0,17	0,19	0,20	0,20	42
K1	P	0,30	0,32	0,36	0,38	0,40	0,42	100
K2	P	0,26	0,30	0,32	0,34	0,36	0,38	85
K3	P	0,26	0,30	0,32	0,34	0,36	0,38	75
K4	P	0,26	0,30	0,32	0,34	0,36	0,38	70
K5	P	0,24	0,26	0,30	0,32	0,34	0,34	42
N1	N	0,38	0,42	0,46	0,50	0,55	0,55	350
N2	M	0,28	0,32	0,34	0,38	0,40	0,42	225
N3	M	0,28	0,32	0,34	0,38	0,40	0,42	150
N11	M	0,28	0,32	0,34	0,38	0,40	0,42	285
S1	M	0,14	0,16	0,17	0,19	0,20	0,20	39
S2	M	0,14	0,16	0,17	0,19	0,20	0,20	28
S3	M	0,13	0,15	0,16	0,17	0,18	0,19	28
S11	M	0,16	0,18	0,20	0,22	0,22	0,24	70
S12	M	0,16	0,18	0,20	0,22	0,22	0,24	55
S13	M	0,14	0,16	0,17	0,19	0,20	0,20	43
H3	P	0,12	0,13	0,15	0,16	0,17	0,17	36
H5	P	0,18	0,20	0,22	0,24	0,26	0,26	65
H7	P	0,12	0,13	0,15	0,16	0,17	0,17	36
H8	P	0,14	0,16	0,17	0,18	0,19	0,20	65
H11	P	0,18	0,20	0,22	0,24	0,26	0,26	85
H12	P	0,18	0,20	0,22	0,24	0,26	0,26	140
H21	P	0,14	0,16	0,17	0,18	0,19	0,20	65

SMG = Seco material group
f = mm/rev
v_c= m/min
All cutting data are start values

Cutting data – SD205A – Ø2-8

SMG		f						v_c
		Ø2,00	Ø3,00	Ø4,00	Ø5,00	Ø6,00	Ø8,00	
P1	P	0,11	0,13	0,16	0,18	0,20	0,24	185
P2	P	0,11	0,14	0,16	0,18	0,20	0,26	180
P3	P	0,11	0,13	0,15	0,17	0,19	0,24	155
P4	P	0,10	0,13	0,15	0,17	0,19	0,24	135
P5	P	0,10	0,12	0,14	0,17	0,19	0,22	130
P6	P	0,10	0,12	0,14	0,16	0,19	0,22	145
P7	P	0,10	0,12	0,14	0,16	0,19	0,22	140
P8	P	0,11	0,13	0,15	0,17	0,19	0,24	130
P11	P	0,10	0,12	0,14	0,16	0,19	0,22	135
M1	M	0,075	0,095	0,11	0,13	0,15	0,19	100
M2	M	0,065	0,085	0,10	0,12	0,14	0,17	80
M3	M	0,055	0,065	0,080	0,095	0,11	0,14	60
M4	M	0,048	0,060	0,070	0,085	0,095	0,12	46
M5	M	0,048	0,060	0,070	0,085	0,095	0,12	38
K1	P	0,11	0,14	0,16	0,18	0,20	0,26	120
K2	P	0,10	0,12	0,14	0,17	0,19	0,22	105
K3	P	0,10	0,12	0,14	0,17	0,19	0,22	90
K4	P	0,10	0,12	0,14	0,17	0,19	0,22	85
K5	P	0,090	0,11	0,13	0,15	0,17	0,20	50
N1	N	0,13	0,16	0,19	0,22	0,26	0,32	350
N2	M	0,095	0,12	0,14	0,17	0,19	0,24	200
N3	M	0,095	0,12	0,14	0,17	0,19	0,24	135
N11	M	0,095	0,12	0,14	0,17	0,19	0,24	255
S1	M	0,048	0,060	0,070	0,085	0,095	0,12	35
S2	M	0,048	0,060	0,070	0,085	0,095	0,12	25
S3	M	0,044	0,055	0,065	0,075	0,090	0,11	25
S11	M	0,055	0,065	0,080	0,095	0,11	0,14	65
S12	M	0,055	0,065	0,080	0,095	0,11	0,14	50
S13	M	0,048	0,060	0,070	0,085	0,095	0,12	39
H3	P	0,046	0,055	0,065	0,075	0,085	0,10	33
H5	P	0,070	0,085	0,10	0,11	0,13	0,16	60
H7	P	0,046	0,055	0,065	0,075	0,085	0,10	33
H8	P	0,055	0,065	0,075	0,085	0,095	0,12	60
H11	P	0,070	0,085	0,10	0,11	0,13	0,16	75
H12	P	0,070	0,085	0,10	0,11	0,13	0,16	125
H21	P	0,055	0,065	0,075	0,085	0,095	0,12	60

SMG = Seco material group
f = mm/rev
v_c= m/min
All cutting data are start values

Cutting data – SD205A – Ø10-20

SMG		f						v_c
		Ø10,00	Ø12,00	Ø14,00	Ø16,00	Ø18,00	Ø20,00	
P1	P	0,28	0,32	0,36	0,38	0,40	0,42	185
P2	P	0,30	0,32	0,36	0,38	0,40	0,42	180
P3	P	0,28	0,32	0,34	0,36	0,38	0,40	155
P4	P	0,28	0,30	0,34	0,36	0,38	0,40	135
P5	P	0,26	0,30	0,32	0,34	0,36	0,38	130
P6	P	0,26	0,30	0,32	0,34	0,36	0,38	145
P7	P	0,26	0,30	0,32	0,34	0,36	0,38	140
P8	P	0,28	0,32	0,34	0,36	0,38	0,40	130
P11	P	0,26	0,30	0,32	0,34	0,36	0,38	135
M1	M	0,22	0,24	0,28	0,30	0,30	0,32	100
M2	M	0,20	0,22	0,24	0,26	0,28	0,30	80
M3	M	0,16	0,18	0,20	0,22	0,22	0,24	60
M4	M	0,14	0,16	0,17	0,19	0,20	0,20	46
M5	M	0,14	0,16	0,17	0,19	0,20	0,20	38
K1	P	0,30	0,32	0,36	0,38	0,40	0,42	120
K2	P	0,26	0,30	0,32	0,34	0,36	0,38	105
K3	P	0,26	0,30	0,32	0,34	0,36	0,38	90
K4	P	0,26	0,30	0,32	0,34	0,36	0,38	85
K5	P	0,24	0,26	0,30	0,32	0,34	0,34	50
N1	N	0,38	0,42	0,46	0,50	0,55	0,55	350
N2	M	0,28	0,32	0,34	0,38	0,40	0,42	200
N3	M	0,28	0,32	0,34	0,38	0,40	0,42	135
N11	M	0,28	0,32	0,34	0,38	0,40	0,42	255
S1	M	0,14	0,16	0,17	0,19	0,20	0,20	35
S2	M	0,14	0,16	0,17	0,19	0,20	0,20	25
S3	M	0,13	0,15	0,16	0,17	0,18	0,19	25
S11	M	0,16	0,18	0,20	0,22	0,22	0,24	65
S12	M	0,16	0,18	0,20	0,22	0,22	0,24	50
S13	M	0,14	0,16	0,17	0,19	0,20	0,20	39
H3	P	0,12	0,13	0,15	0,16	0,17	0,17	33
H5	P	0,18	0,20	0,22	0,24	0,26	0,26	60
H7	P	0,12	0,13	0,15	0,16	0,17	0,17	33
H8	P	0,14	0,16	0,17	0,18	0,19	0,20	60
H11	P	0,18	0,20	0,22	0,24	0,26	0,26	75
H12	P	0,18	0,20	0,22	0,24	0,26	0,26	125
H21	P	0,14	0,16	0,17	0,18	0,19	0,20	60

SMG = Seco material group
f = mm/rev
v_c= m/min
All cutting data are start values

Cutting data – SD206 – Ø0,7-2

SMG		f			v_c
		Ø0,70	Ø1,00	Ø2,00	
P1	P	0,080	0,090	0,11	140
P2	P	0,085	0,090	0,12	140
P3	P	0,080	0,085	0,11	120
P4	P	0,080	0,085	0,11	105
P5	P	0,075	0,085	0,11	100
P6	P	0,075	0,080	0,10	110
P7	P	0,075	0,080	0,10	105
P8	P	0,080	0,085	0,11	100
P11	P	0,075	0,080	0,10	105
K1	P	0,085	0,090	0,12	100
K2	P	0,075	0,085	0,11	85
K3	P	0,075	0,085	0,11	75
K4	P	0,075	0,085	0,11	70
K5	P	0,070	0,075	0,095	42

Cutting data – SD206A – Ø1-2

SMG		f			v_c
		Ø1,00	Ø1,50	Ø2,00	
P1	P	0,090	0,10	0,11	175
P2	P	0,090	0,10	0,12	170
P3	P	0,085	0,10	0,11	145
P4	P	0,085	0,095	0,11	130
P5	P	0,085	0,095	0,11	125
P6	P	0,080	0,095	0,10	140
P7	P	0,080	0,095	0,10	130
P8	P	0,085	0,10	0,11	125
P11	P	0,080	0,095	0,10	125
M1	P	0,090	0,10	0,12	95
M2	P	0,085	0,095	0,11	75
M3	P	0,065	0,075	0,085	60
M4	P	0,060	0,065	0,075	43
M5	P	0,060	0,065	0,075	36
K1	P	0,090	0,10	0,12	115
K2	P	0,085	0,095	0,11	100
K3	P	0,085	0,095	0,11	85
K4	P	0,085	0,095	0,11	80
K5	P	0,075	0,085	0,095	47
N2	P	0,12	0,13	0,15	190
N3	P	0,12	0,13	0,15	125

SMG = Seco material group
f = mm/rev
v_c= m/min
All cutting data are start values

Cutting data – SD207A – Ø3-20

SMG		f										v_c
		Ø3,00	Ø5,00	Ø6,00	Ø8,00	Ø10,00	Ø12,00	Ø14,00	Ø16,00	Ø18,00	Ø20,00	
P1	P	0,13	0,18	0,20	0,24	0,28	0,32	0,36	0,38	0,40	0,42	165
P2	P	0,14	0,18	0,20	0,26	0,30	0,32	0,36	0,38	0,40	0,42	160
P3	P	0,13	0,17	0,19	0,24	0,28	0,32	0,34	0,36	0,38	0,40	140
P4	P	0,13	0,17	0,19	0,24	0,28	0,30	0,34	0,36	0,38	0,40	120
P5	P	0,12	0,17	0,19	0,22	0,26	0,30	0,32	0,34	0,36	0,38	115
P6	P	0,12	0,16	0,19	0,22	0,26	0,30	0,32	0,34	0,36	0,38	130
P7	P	0,12	0,16	0,19	0,22	0,26	0,30	0,32	0,34	0,36	0,38	125
P8	P	0,13	0,17	0,19	0,24	0,28	0,32	0,34	0,36	0,38	0,40	115
P11	P	0,12	0,16	0,19	0,22	0,26	0,30	0,32	0,34	0,36	0,38	120
M1	P	0,14	0,18	0,20	0,26	0,30	0,32	0,36	0,38	0,40	0,42	90
M2	P	0,12	0,17	0,19	0,22	0,26	0,30	0,32	0,34	0,36	0,38	70
M3	P	0,10	0,13	0,15	0,18	0,22	0,24	0,26	0,28	0,30	0,30	55
M4	P	0,085	0,12	0,13	0,16	0,19	0,20	0,22	0,24	0,26	0,28	41
M5	P	0,085	0,12	0,13	0,16	0,19	0,20	0,22	0,24	0,26	0,28	34
K1	P	0,14	0,18	0,20	0,26	0,30	0,32	0,36	0,38	0,40	0,42	110
K2	P	0,12	0,17	0,19	0,22	0,26	0,30	0,32	0,34	0,36	0,38	95
K3	P	0,12	0,17	0,19	0,22	0,26	0,30	0,32	0,34	0,36	0,38	80
K4	P	0,12	0,17	0,19	0,22	0,26	0,30	0,32	0,34	0,36	0,38	75
K5	P	0,11	0,15	0,17	0,20	0,24	0,26	0,30	0,32	0,34	0,34	45
H3	P	0,055	0,075	0,085	0,10	0,12	0,13	0,15	0,16	0,17	0,17	29
H5	P	0,085	0,11	0,13	0,16	0,18	0,20	0,22	0,24	0,26	0,26	55
H7	P	0,055	0,075	0,085	0,10	0,12	0,13	0,15	0,16	0,17	0,17	29
H8	P	0,065	0,085	0,095	0,12	0,14	0,16	0,17	0,18	0,19	0,20	55
H11	P	0,085	0,11	0,13	0,16	0,18	0,20	0,22	0,24	0,26	0,26	70
H12	P	0,085	0,11	0,13	0,16	0,18	0,20	0,22	0,24	0,26	0,26	110
H21	P	0,065	0,085	0,095	0,12	0,14	0,16	0,17	0,18	0,19	0,20	55

Cutting data – SD216A – Ø3-14

SMG		f							v_c
		Ø3,00	Ø5,00	Ø6,00	Ø8,00	Ø10,00	Ø12,00	Ø14,00	
P1	P	0,13	0,18	0,20	0,26	0,30	0,32	0,36	125
P2	P	0,14	0,18	0,20	0,26	0,30	0,34	0,36	120
P3	P	0,13	0,17	0,20	0,24	0,28	0,32	0,34	105
P4	P	0,13	0,17	0,19	0,24	0,28	0,30	0,34	90
P5	P	0,12	0,17	0,19	0,24	0,28	0,30	0,34	85
P6	P	0,12	0,17	0,19	0,24	0,26	0,30	0,32	95
P7	P	0,12	0,17	0,19	0,24	0,26	0,30	0,32	90
P8	P	0,13	0,17	0,20	0,24	0,28	0,32	0,34	85
P11	P	0,12	0,17	0,19	0,24	0,26	0,30	0,32	90
M1	P	0,14	0,18	0,20	0,26	0,30	0,34	0,36	65
M2	P	0,12	0,17	0,19	0,24	0,28	0,30	0,34	55
M3	P	0,10	0,13	0,15	0,19	0,22	0,24	0,26	41
M4	P	0,085	0,12	0,13	0,16	0,19	0,22	0,24	31
M5	P	0,085	0,12	0,13	0,16	0,19	0,22	0,24	25
K1	P	0,14	0,18	0,20	0,26	0,30	0,34	0,36	80
K2	P	0,12	0,17	0,19	0,24	0,28	0,30	0,34	70
K3	P	0,12	0,17	0,19	0,24	0,28	0,30	0,34	60
K4	P	0,12	0,17	0,19	0,24	0,28	0,30	0,34	55
K5	P	0,11	0,15	0,17	0,20	0,24	0,28	0,30	33
N2	P	0,17	0,24	0,26	0,32	0,38	0,42	0,46	135
N3	P	0,17	0,24	0,26	0,32	0,38	0,42	0,46	90
H3	P	0,055	0,075	0,085	0,10	0,12	0,14	0,15	22
H5	P	0,085	0,11	0,13	0,16	0,18	0,20	0,22	40
H7	P	0,055	0,075	0,085	0,10	0,12	0,14	0,15	22
H8	P	0,065	0,085	0,10	0,12	0,14	0,16	0,17	40
H11	P	0,085	0,11	0,13	0,16	0,18	0,20	0,22	50
H12	P	0,085	0,11	0,13	0,16	0,18	0,20	0,22	85
H21	P	0,065	0,085	0,10	0,12	0,14	0,16	0,17	40

SMG = Seco material group
f = mm/rev
v_c= m/min
All cutting data are start values

Cutting data – SD230A – Ø3-12

SMG		f						v_c
		Ø3,00	Ø5,00	Ø6,00	Ø8,00	Ø10,00	Ø12,00	
P1	P	0,13	0,18	0,20	0,26	0,30	0,32	90
P2	P	0,14	0,18	0,20	0,26	0,30	0,34	90
P3	P	0,13	0,17	0,20	0,24	0,28	0,32	75
P4	P	0,13	0,17	0,19	0,24	0,28	0,30	70
P5	P	0,12	0,17	0,19	0,24	0,28	0,30	65
P6	P	0,12	0,17	0,19	0,24	0,26	0,30	75
P7	P	0,12	0,17	0,19	0,24	0,26	0,30	70
P8	P	0,13	0,17	0,20	0,24	0,28	0,32	65
P11	P	0,12	0,17	0,19	0,24	0,26	0,30	65
M1	P	0,14	0,18	0,20	0,26	0,30	0,34	50
M2	P	0,12	0,17	0,19	0,24	0,28	0,30	40
M3	P	0,10	0,13	0,15	0,19	0,22	0,24	30
M4	P	0,085	0,12	0,13	0,16	0,19	0,22	23
M5	P	0,085	0,12	0,13	0,16	0,19	0,22	19
K1	P	0,14	0,18	0,20	0,26	0,30	0,34	60
K2	P	0,12	0,17	0,19	0,24	0,28	0,30	50
K3	P	0,12	0,17	0,19	0,24	0,28	0,30	44
K4	P	0,12	0,17	0,19	0,24	0,28	0,30	42
K5	P	0,11	0,15	0,17	0,20	0,24	0,28	25
N2	P	0,17	0,24	0,26	0,32	0,38	0,42	100
N3	P	0,17	0,24	0,26	0,32	0,38	0,42	65
H3	P	0,055	0,075	0,085	0,10	0,12	0,14	16
H5	P	0,085	0,11	0,13	0,16	0,18	0,20	30
H7	P	0,055	0,075	0,085	0,10	0,12	0,14	16
H8	P	0,065	0,085	0,10	0,12	0,14	0,16	30
H11	P	0,085	0,11	0,13	0,16	0,18	0,20	38
H12	P	0,085	0,11	0,13	0,16	0,18	0,20	60
H21	P	0,065	0,085	0,10	0,12	0,14	0,16	30

Cutting data – SD245A – Ø4-16

SMG		f							v_c
		Ø4,00	Ø6,00	Ø8,00	Ø10,00	Ø12,00	Ø14,00	Ø16,00	
P1	P	0,11	0,15	0,19	0,22	0,26	0,28	0,32	185
P2	P	0,11	0,15	0,19	0,22	0,26	0,30	0,32	180
P3	P	0,11	0,14	0,18	0,22	0,24	0,28	0,30	155
P4	P	0,11	0,14	0,18	0,22	0,24	0,26	0,30	135
P5	P	0,10	0,14	0,17	0,20	0,24	0,26	0,28	130
P6	P	0,10	0,14	0,17	0,20	0,24	0,26	0,28	145
P7	P	0,10	0,14	0,17	0,20	0,24	0,26	0,28	140
P8	P	0,11	0,14	0,18	0,22	0,24	0,28	0,30	130
P11	P	0,10	0,14	0,17	0,20	0,24	0,26	0,28	135
M1	P	0,11	0,15	0,19	0,22	0,26	0,30	0,32	100
M2	P	0,10	0,14	0,17	0,20	0,24	0,26	0,28	80
K1	P	0,11	0,15	0,19	0,22	0,26	0,30	0,32	120
K2	P	0,10	0,14	0,17	0,20	0,24	0,26	0,28	105
K3	P	0,10	0,14	0,17	0,20	0,24	0,26	0,28	90
K4	P	0,10	0,14	0,17	0,20	0,24	0,26	0,28	85
K5	P	0,095	0,12	0,16	0,19	0,22	0,24	0,26	50
N2	P	0,14	0,19	0,24	0,28	0,34	0,38	0,40	200
N3	P	0,14	0,19	0,24	0,28	0,34	0,38	0,40	135
N11	P	0,14	0,19	0,24	0,28	0,34	0,38	0,40	255

SMG = Seco material group
f = mm/rev
v_c= m/min
All cutting data are start values

Cutting data – SD265A – Ø4-16

SMG		f							v_c
		Ø4,00	Ø6,00	Ø8,00	Ø10,00	Ø12,00	Ø14,00	Ø16,00	
P1	P	0,12	0,16	0,20	0,24	0,28	0,30	0,34	180
P2	P	0,12	0,16	0,20	0,24	0,28	0,30	0,34	175
P3	P	0,11	0,15	0,19	0,22	0,26	0,30	0,32	150
P4	P	0,11	0,15	0,19	0,22	0,26	0,28	0,32	135
P5	P	0,11	0,15	0,18	0,22	0,26	0,28	0,30	130
P6	P	0,11	0,15	0,18	0,22	0,26	0,28	0,30	145
P7	P	0,11	0,15	0,18	0,22	0,26	0,28	0,30	135
P8	P	0,11	0,15	0,19	0,22	0,26	0,30	0,32	130
P11	P	0,11	0,15	0,18	0,22	0,26	0,28	0,30	130
M1	P	0,12	0,16	0,20	0,24	0,28	0,30	0,34	100
M2	P	0,11	0,15	0,18	0,22	0,26	0,28	0,30	80
K1	P	0,12	0,16	0,20	0,24	0,28	0,30	0,34	120
K2	P	0,11	0,15	0,18	0,22	0,26	0,28	0,30	100
K3	P	0,11	0,15	0,18	0,22	0,26	0,28	0,30	85
K4	P	0,11	0,15	0,18	0,22	0,26	0,28	0,30	85
K5	P	0,10	0,13	0,17	0,20	0,22	0,26	0,28	49
N2	P	0,15	0,20	0,26	0,30	0,36	0,40	0,42	195
N3	P	0,15	0,20	0,26	0,30	0,36	0,40	0,42	130
N11	P	0,15	0,20	0,26	0,30	0,36	0,40	0,42	250

SMG = Seco material group
f = mm/rev
v_c = m/min
All cutting data are start values

Cutting data – SD205A-C1 – Ø3-13

SMG		f						v_c
		Ø3,00	Ø5,00	Ø7,00	Ø9,00	Ø11,00	Ø13,00	
TS2	C1	0,060	0,060	0,065	0,070	0,075	0,080	65
TS3	C1	0,060	0,060	0,065	0,070	0,075	0,080	50
TP2	C1	0,060	0,060	0,065	0,070	0,075	0,080	65
TP3	C1	0,060	0,060	0,065	0,070	0,075	0,080	50

Cutting data – SD205A-C2 – Ø3-13

SMG		f						v_c
		Ø3,00	Ø5,00	Ø7,00	Ø9,00	Ø11,00	Ø13,00	
N1	C2	0,095	0,10	0,11	0,12	0,13	0,14	80
N2	C2	0,095	0,10	0,11	0,12	0,13	0,14	50
N3	C2	0,095	0,10	0,11	0,12	0,13	0,14	33
S11	C2	0,055	0,065	0,080	0,090	0,10	0,11	50
S12	C2	0,055	0,065	0,080	0,090	0,10	0,11	40
S13	C2	0,048	0,060	0,070	0,080	0,090	0,10	31

Cutting data – SD203-CX1 – Ø3-9

SMG		f				v_c
		Ø3,00	Ø5,00	Ø7,00	Ø9,00	
TS2	CX1	0,075	0,085	0,090	0,10	150
TS3	CX1	0,075	0,085	0,090	0,10	120
TP2	CX1	0,075	0,085	0,090	0,10	150
TP3	CX1	0,075	0,085	0,090	0,10	120

Cutting data – SD203A-CX2 – Ø3-9

SMG		f				v_c
		Ø3,00	Ø5,00	Ø7,00	Ø9,00	
N1	CX2	0,048	0,050	0,055	0,060	185
N2	CX2	0,048	0,050	0,055	0,060	120
N3	CX2	0,048	0,050	0,055	0,060	80
S11	CX2	0,019	0,020	0,024	0,024	16
S12	CX2	0,019	0,020	0,024	0,024	12
S13	CX2	0,017	0,018	0,020	0,022	9

Cutting data – SD205A-CX31 – Ø4-8

SMG		f					v_c
		Ø4,00	Ø5,00	Ø6,00	Ø7,00	Ø8,00	
N1	CX31	0,10	0,10	0,11	0,11	0,12	155
N2	CX31	0,10	0,10	0,11	0,11	0,12	100
N3	CX31	0,10	0,10	0,11	0,11	0,12	65
S11	CX31	0,040	0,048	0,055	0,065	0,070	16
S12	CX31	0,040	0,048	0,055	0,065	0,070	12
S13	CX31	0,034	0,042	0,048	0,055	0,065	9
TS2	CX31	0,080	0,085	0,090	0,090	0,095	125
TS3	CX31	0,080	0,085	0,090	0,090	0,095	100
TP2	CX31	0,080	0,085	0,090	0,090	0,095	125
TP3	CX31	0,080	0,085	0,090	0,090	0,095	100

SMG = Seco material group
f = mm/rev
v_c= m/min
Cutting data depends on exiting material. N1-N3 and S11-S13 used for stack drilling application
N1-N3 = Alu
S11-S13 = Ti
TS/TP = Composite
All cutting data are start values

Cutting data – SD22 & SD26 – Ø0,1-0,3

SMG	f			v_c
	Ø0,10	Ø0,20	Ø0,30	
P1	0,0011	0,0017	0,0024	11
P2	0,0011	0,0017	0,0024	11
P3	0,0010	0,0016	0,0022	10
P4	0,0010	0,0016	0,0022	8
P5	0,0010	0,0016	0,0022	8
P6	0,0010	0,0016	0,0022	9
P7	0,0010	0,0016	0,0022	8
P8	0,0010	0,0016	0,0022	8
P11	0,0010	0,0016	0,0022	8
M1	0,0011	0,0017	0,0024	2
M2	0,0010	0,0016	0,0022	2
K1	0,0011	0,0017	0,0024	6
K2	0,0010	0,0016	0,0022	5
K3	0,0010	0,0016	0,0022	4
K4	0,0010	0,0016	0,0022	4
K5	0,00090	0,0014	0,0019	3
N2	0,0014	0,0022	0,0030	15
N3	0,0014	0,0022	0,0030	10
S11	0,00080	0,0013	0,0017	4
S12	0,00080	0,0013	0,0017	3

Cutting data – SD22 & SD26 – Ø0,4-0,5

SMG	f		v_c
	Ø0,40	Ø0,50	
P1	0,0030	0,0036	14
P2	0,0030	0,0036	14
P3	0,0028	0,0034	12
P4	0,0028	0,0034	10
P5	0,0028	0,0034	10
P6	0,0028	0,0032	11
P7	0,0028	0,0032	11
P8	0,0028	0,0034	10
P11	0,0028	0,0032	10
M1	0,0030	0,0036	5
M2	0,0028	0,0034	4
K1	0,0030	0,0036	10
K2	0,0028	0,0034	9
K3	0,0028	0,0034	7
K4	0,0028	0,0034	7
K5	0,0024	0,0030	4
N2	0,0038	0,0046	30
N3	0,0038	0,0046	20
S11	0,0022	0,0026	8
S12	0,0022	0,0026	6

SMG = Seco material group
f = mm/rev
v_c= m/min
All cutting data are start values

Cutting data – SD22 & SD26 – Ø0,6-0,8

SMG	f			v_c
	Ø0,60	Ø0,70	Ø0,80	
P1	0,0042	0,0048	0,0055	28
P2	0,0042	0,0050	0,0055	28
P3	0,0040	0,0046	0,0055	24
P4	0,0040	0,0046	0,0050	21
P5	0,0038	0,0044	0,0050	20
P6	0,0038	0,0044	0,0050	22
P7	0,0038	0,0044	0,0050	21
P8	0,0040	0,0046	0,0055	20
P11	0,0038	0,0044	0,0050	21
M1	0,0042	0,0050	0,0055	9
M2	0,0038	0,0044	0,0050	7
K1	0,0042	0,0050	0,0055	15
K2	0,0038	0,0044	0,0050	13
K3	0,0038	0,0044	0,0050	11
K4	0,0038	0,0044	0,0050	10
K5	0,0036	0,0040	0,0046	6
N2	0,0055	0,0065	0,0070	60
N3	0,0055	0,0065	0,0070	40
S11	0,0032	0,0036	0,0040	13
S12	0,0032	0,0036	0,0040	10

Cutting data – SD22 & SD26 – Ø0,9-1,1

SMG	f			v_c
	Ø0,90	Ø1,00	Ø1,10	
P1	0,0060	0,0065	0,0075	50
P2	0,0060	0,0070	0,0075	48
P3	0,0060	0,0065	0,0070	42
P4	0,0055	0,0065	0,0070	37
P5	0,0055	0,0060	0,0070	35
P6	0,0055	0,0060	0,0065	39
P7	0,0055	0,0060	0,0065	37
P8	0,0060	0,0065	0,0070	35
P11	0,0055	0,0060	0,0065	36
M1	0,0060	0,0070	0,0075	12
M2	0,0055	0,0060	0,0070	10
K1	0,0060	0,0070	0,0075	20
K2	0,0055	0,0060	0,0070	17
K3	0,0055	0,0060	0,0070	15
K4	0,0055	0,0060	0,0070	14
K5	0,0050	0,0055	0,0060	8
N2	0,0080	0,0085	0,0095	80
N3	0,0080	0,0085	0,0095	55
S11	0,0046	0,0050	0,0055	19
S12	0,0046	0,0050	0,0055	15

SMG = Seco material group
f = mm/rev
v_c= m/min
All cutting data are start values

Cutting data – SD22 & SD26 – Ø1,2-2,0

SMG	f					v_c
	Ø1,20	Ø1,40	Ø1,60	Ø1,80	Ø2,00	
P1	0,0080	0,0090	0,010	0,012	0,013	70
P2	0,0080	0,0095	0,011	0,012	0,013	70
P3	0,0075	0,0090	0,010	0,011	0,012	60
P4	0,0075	0,0085	0,010	0,011	0,012	50
P5	0,0075	0,0085	0,0095	0,011	0,012	50
P6	0,0075	0,0085	0,0095	0,011	0,012	55
P7	0,0075	0,0085	0,0095	0,011	0,012	55
P8	0,0075	0,0090	0,010	0,011	0,012	50
P11	0,0075	0,0085	0,0095	0,011	0,012	50
M1	0,0080	0,0095	0,011	0,012	0,013	15
M2	0,0075	0,0085	0,0095	0,011	0,012	12
K1	0,0080	0,0095	0,011	0,012	0,013	35
K2	0,0075	0,0085	0,0095	0,011	0,012	30
K3	0,0075	0,0085	0,0095	0,011	0,012	26
K4	0,0075	0,0085	0,0095	0,011	0,012	25
K5	0,0065	0,0075	0,0085	0,010	0,011	15
N2	0,010	0,012	0,014	0,015	0,017	100
N3	0,010	0,012	0,014	0,015	0,017	65
S11	0,0060	0,0070	0,0075	0,0085	0,0095	26
S12	0,0060	0,0070	0,0075	0,0085	0,0095	20

SMG = Seco material group
f = mm/rev
v_c= m/min
All cutting data are start values



Range overview

Crownloc®	∅ Range	Drill depth	Crown tolerance	Hole tolerance (1)	Surface finish (2)
SD101  **Page 138**	12,00–25,99	~ 1,5 x D	k7	IT10	R_a 1–3 µm
SD103  **Page 139**	10,00–25,99	~ 3 x D	k7	IT10	R_a 1–3 µm
SD105  **Page 140**	10,00–25,99	~ 5 x D	k7	IT10	R_a 1–3 µm
SD107  **Page 141**	12,00–25,99	~ 7 x D	k7	IT10	R_a 1–4 µm
Chamfer module  **Page 145**	12,00–19,99	–	–	–	–

1) Variations can occur depending on the material and the cutting data used.
2) Drill depth, cutting data, coolant pressure and material can cause deterioration of the surface finish.

Code key Crownloc®

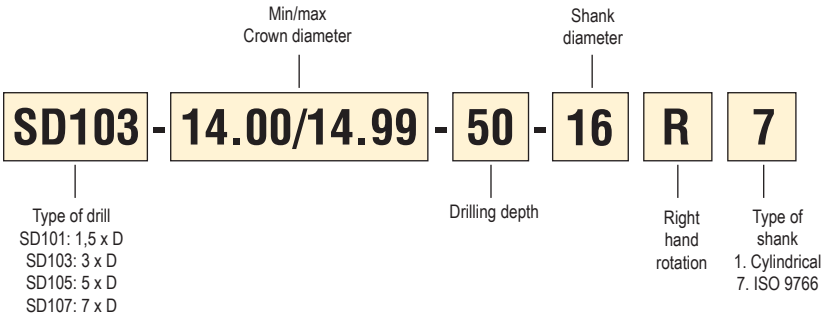



Code key Crowns

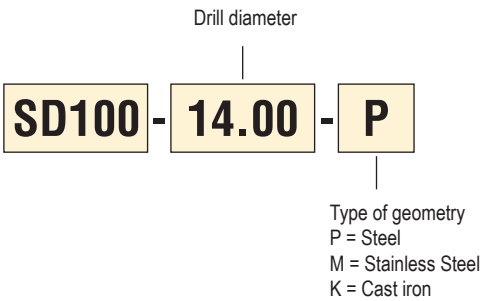

Geometries

P-geometry - Universal geometry, first choice for drilling in steel	M-geometry - For stainless steels and high temp alloys	K-geometry - First choice for drilling in cast iron
	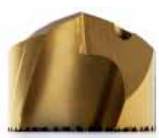	

Spare part kits

Spare part kit designation				
Drill diameter	**SD101**	**SD103**	**SD105**	**SD107**
10,00-11,99	–	SD103-SP-4.0	SD105-SP-4.0	–
12,00-13,99	SD101-SP-5.0	SD103-SP-5.0	SD105-SP-5.0	SD107-SP-5.0
14,00-16,99	SD101-SP-6.0	SD103-SP-6.0	SD105-SP-6.0	SD107-SP-6.0
17,00-19,99	SD101-SP-7.0	SD103-SP-7.0	SD105-SP-7.0	SD107-SP-7.0
20,00-25,99	SD101-SP-8.0	SD103-SP-8.0	SD105-SP-8.0	SD107-SP-8.0

Mounting instructions

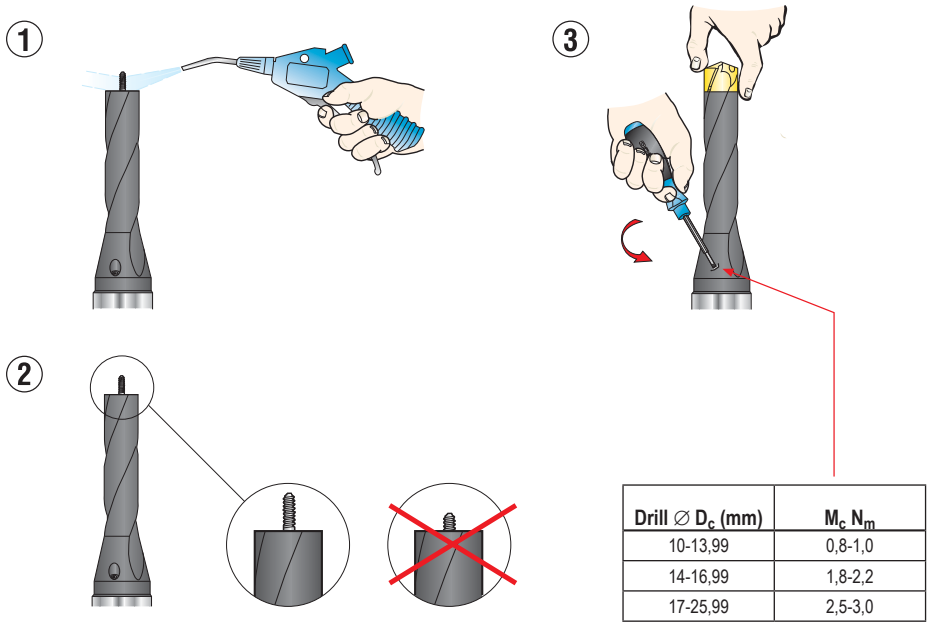

Drill ∅ D_c (mm)	M_c N_m
10-13,99	0,8-1,0
14-16,99	1,8-2,2
17-25,99	2,5-3,0

1. Clean the locking interface of the drill body carefully to remove any chips or debris.
2. Make sure that the pull rod is fully extended.
3. Mount new crown onto the pull rod and turn it until it reaches the bottom of the thread.
Turn the crown slightly counterclockwise (backwards) until the locking interfaces fit.
Push the crown towards the body into the right position while turning the clamping screw.
Make sure the interfaces fit.
Tighten the clamping screw firmly using the torque key.

Stability

The stability of the applicationis important in obtaining the best tool life and hole accuracy. Check the condition of the machine spindle, fixture and fixturing of the component to secure maximum stability and rigidity.
Unstable conditions can cause tool breakages.

Rotating

Total Indicated Run-out (TIR) should not exceed 0,06 mm in a rotating application. Measure the run-out when the drill is mounted in the spindle.

Stationary

The distance between the drill point and the rotating centre of the workpiece should not exceed 0.03 mm radially in a stationary application.

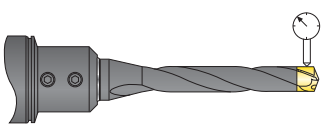

Recommended tool holders

For best results, use holders type DIN 1835 B/DIN 6535 HB (Weldon).
For further information see EPB (tooling) catalogue.



Weldon

Drilling depth ~ 1,5 x D

SD101 -R7 shank



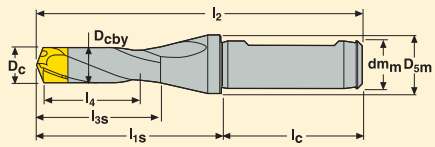

- ISO9766 fits holders: Weldon 1835B, ISO 5414, DIN 60880
- Internal coolant
- For cutting and machining data see page 148

D_c	l_4	Part No.	Dimensions in mm						
			l_2	l_{1s}	D_{cby}	l_c	l_{3s}	dm_m	D_{5m}
12,00-12,49	20	**SD101-12.00/12.49-20-16R7**	96	48	11,5	48	32	16	20
12,50-12,99	20	**SD101-12.50/12.99-20-16R7**	96,4	48,4	12,0	48	32,4	16	20
13,00-13,99	20	**SD101-13.00/13.99-20-16R7**	96,8	48,8	12,5	48	32,8	16	20
14,00-14,99	25	**SD101-14.00/14.99-25-16R7**	102,4	54,4	13,5	48	38,4	16	20
15,00-15,99	25	**SD101-15.00/15.99-25-16R7**	103,3	55,3	14,5	48	39,3	16	20
16,00-16,99	25	**SD101-16.00/16.99-25-16R7**	104	56	15,5	48	40	16	20
17,00-17,99	30	**SD101-17.00/17.99-30-20R7**	110,7	60,7	16,5	50	44,7	20	25
18,00-18,99	30	**SD101-18.00/18.99-30-20R7**	111,7	61,7	17,5	50	45,7	20	25
19,00-19,99	30	**SD101-19.00/19.99-30-20R7**	112,5	62,5	18,5	50	46,5	20	25
20,00-21,99	40	**SD101-20.00/21.99-40-25R7**	129,5	73,5	19,5	56	53,5	25	31
22,00-23,99	40	**SD101-22.00/23.99-40-25R7**	129,5	73,5	21,5	56	53,5	25	31
24,00-25,99	40	**SD101-24.00/25.99-40-25R7**	129,5	73,5	23,5	56	53,5	25	31

Spare parts

For drill dia (mm)	Locking screw	Locking key
		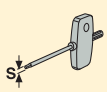
12,00-13,99	MP6SS3X12	H1.5-2D
14,00-16,99	MP6SS4X12	H2.0-2D
17,00-19,99	MP6SS5X16	H2.5-2D
20,00-25,99	MP6SS5X16	H2.5-2D

Accessories*

Torque key	Replacement blade
	
H00-1509	H00-1.5
H00-2020	H00-2.0
H00-2530	H00-2.5
H00-2535	H00-2.5

* Accessories not included in delivery

Drilling depth ~ 3 x D

SD103 -R7 shank



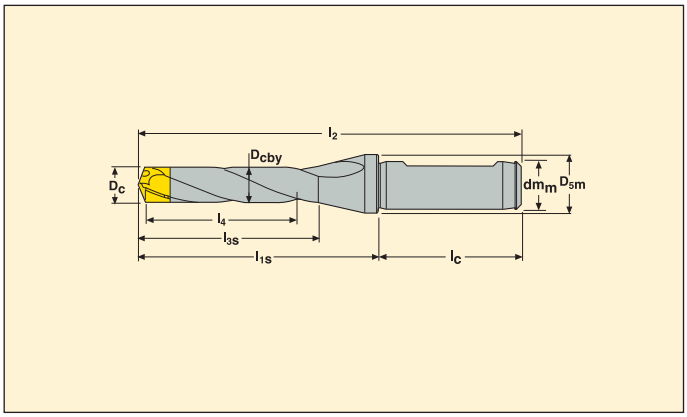

- ISO9766 fits holders: Weldon 1835B, ISO 5414, DIN 60880
- Internal coolant
- For cutting and machining data see page 149

D_c	l_4	Part No.	Dimensions in mm						
			l_2	l_{1s}	D_{cby}	l_c	l_{3s}	dm_m	D_{5m}
10,00-10,49	30	**SD103-10.00/10.49-30-16R7**	101	53	9,5	48	38	16	20
10,50-10,99	30	**SD103-10.50/10.99-30-16R7**	101	53	10,0	48	38	16	20
11,00-11,49	30	**SD103-11.00/11.49-30-16R7**	101	53	10,5	48	38	16	20
11,50-11,99	30	**SD103-11.50/11.99-30-16R7**	101	53	11,0	48	38	16	20
12,00-12,49	40	**SD103-12.00/12.49-40-16R7**	116	68	11,5	48	48	16	20
12,50-12,99	40	**SD103-12.50/12.99-40-16R7**	116,4	68,4	12,0	48	48,4	16	20
13,00-13,99	40	**SD103-13.00/13.99-40-16R7**	116,8	68,8	12,5	48	48,8	16	20
14,00-14,99	50	**SD103-14.00/14.99-50-16R7**	127,4	79,4	13,5	48	59,4	16	20
15,00-15,99	50	**SD103-15.00/15.99-50-16R7**	128,3	80,3	14,5	48	60,3	16	20
16,00-16,99	50	**SD103-16.00/16.99-50-16R7**	129	81	15,5	48	61	16	20
17,00-17,99	60	**SD103-17.00/17.99-60-20R7**	140,7	90,7	16,5	50	67,7	20	25
18,00-18,99	60	**SD103-18.00/18.99-60-20R7**	141,7	91,7	17,5	50	68,7	20	25
19,00-19,99	60	**SD103-19.00/19.99-60-20R7**	142,5	92,7	18,5	50	69,5	20	25
20,00-21,99	75	**SD103-20.00/21.99-75-25R7**	164,5	108,5	19,5	56	88,5	25	31
22,00-23,99	75	**SD103-22.00/23.99-75-25R7**	164,5	108,5	21,5	56	88,5	25	31
24,00-25,99	75	**SD103-24.00/25.99-75-25R7**	164,5	108,5	23,5	56	88,5	25	31

Spare parts

For drill dia (mm)	Locking screw	Locking key
10,00-13,99	MP6SS3X12	H1.5-2D
14,00-16,99	MP6SS4X12	H2.0-2D
17,00-19,99	MP6SS5X16	H2.5-2D
20,00-25,99	MP6SS5X16	H2.5-2D

Accessories*

Torque key	Replacement blade
H00-1509	H00-1.5
H00-2020	H00-2.0
H00-2530	H00-2.5
H00-2535	H00-2.5

* Accessories not included in delivery

Drilling depth ~ 5 x D

SD105 -R7 shank



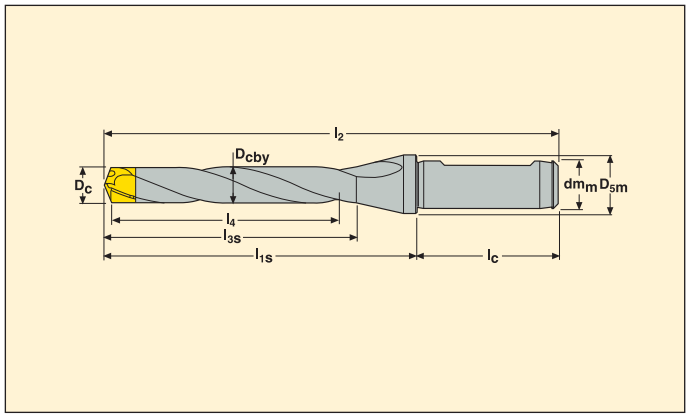

- ISO9766 fits holders: Weldon 1835B, ISO 5414, DIN 60880
- Internal coolant
- For cutting and machining data see page 150

D_c	l_4	Part No.	Dimensions in mm						
			l_2	l_{1s}	D_{cby}	l_c	l_{3s}	dm_m	D_{5m}
10,00-10,49	50	**SD105-10.00/10.49-50-16R7**	120,1	72,1	9,5	48	57,3	16	20
10,50-10,99	50	**SD105-10.50/10.99-50-16R7**	120,6	72,6	10,0	48	57,3	16	20
11,00-11,49	50	**SD105-11.00/11.49-50-16R7**	120,9	72,9	10,5	48	57,3	16	20
11,50-11,99	50	**SD105-11.50/11.99-50-16R7**	121,3	73,3	11,0	48	58,3	16	20
12,00-12,49	65	**SD105-12.00/12.49-65-16R7**	141	93	11,5	48	73	16	20
12,50-12,99	65	**SD105-12.50/12.99-65-16R7**	141,4	93,4	12,0	48	73,4	16	20
13,00-13,99	65	**SD105-13.00/13.99-65-16R7**	141,8	93,8	12,5	48	73,8	16	20
14,00-14,99	80	**SD105-14.00/14.99-80-16R7**	157,4	109,4	13,5	48	89,4	16	20
15,00-15,99	80	**SD105-15.00/15.99-80-16R7**	158,3	110,3	14,5	48	90,3	16	20
16,00-16,99	80	**SD105-16.00/16.99-80-16R7**	159	111	15,5	48	91	16	20
17,00-17,99	95	**SD105-17.00/17.99-95-20R7**	176,7	126,7	16,5	50	107,7	20	25
18,00-18,99	95	**SD105-18.00/18.99-95-20R7**	177,7	127,7	17,5	50	108,7	20	25
19,00-19,99	95	**SD105-19.00/19.99-95-20R7**	178,5	128,5	18,5	50	109,5	20	25
20,00-21,99	125	**SD105-20.00/21.99-125-25R7**	214,5	158,5	19,5	56	138,5	25	31
22,00-23,99	125	**SD105-22.00/23.99-125-25R7**	214,5	158,5	21,5	56	138,5	25	31
24,00-25,99	125	**SD105-24.00/25.99-125-25R7**	214,5	158,5	23,5	56	138,5	25	31

Spare parts

For drill dia (mm)	Locking screw	Locking key
		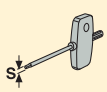
10,00-13,99	MP6SS3X12	H1.5-2D
14,00-16,99	MP6SS4X12	H2.0-2D
17,00-19,99	MP6SS5X16	H2.5-2D
20,00-25,99	MP6SS5X16	H2.5-2D

Accessories*

Torque key	Replacement blade
	
H00-1509	H00-1.5
H00-2020	H00-2.0
H00-2530	H00-2.5
H00-2535	H00-2.5

* Accessories not included in delivery

Drilling depth ~ 7 x D

SD107 -R7 shank



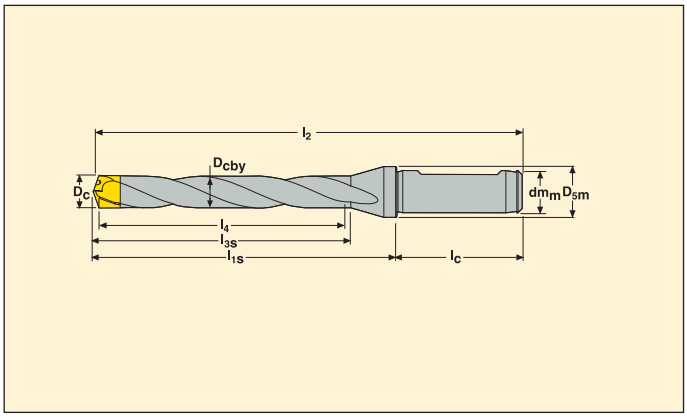

- ISO9766 fits holders: Weldon 1835B, ISO 5414, DIN 60880
- Internal coolant
- For cutting and machining data see page 151

D_c	l_4	Part No.	Dimensions in mm						
			l_2	l_{1s}	D_{cby}	l_c	l_{3s}	dm_m	D_{5m}
12,00-12,49	90	**SD107-12.00/12.49-90-16R7**	166,5	118,5	11,5	48	100,5	16,0	20
12,50-12,99	90	**SD107-12.50/12.99-90-16R7**	167	119,0	12,0	48	101,0	16,0	20
13,00-13,99	90	**SD107-13.00/13.99-90-16R7**	167,5	119,5	12,5	48	101,5	16,0	20
14,00-14,99	110	**SD107-14.00/14.99-110-16R7**	188	140,0	13,5	48	122,0	16,0	20
15,00-15,99	110	**SD107-15.00/15.99-110-16R7**	189	141,0	14,5	48	123,0	16,0	20
16,00-16,99	110	**SD107-16.00/16.99-110-16R7**	189,5	141,5	15,5	48	123,5	16,0	20
17,00-17,99	130	**SD107-17.00/17.99-130-20R7**	212,5	162,5	16,5	50	144,5	20,0	25
18,00-18,99	130	**SD107-18.00/18.99-130-20R7**	213,5	163,5	17,5	50	145,5	20,0	25
19,00-19,99	130	**SD107-19.00/19.99-130-20R7**	214,5	164,5	18,5	50	146,5	20,0	25
20,00-21,99	175	**SD107-20.00/21.99-175-25R7**	264,5	208,5	19,5	56	188,5	25,0	31
22,00-23,99	175	**SD107-22.00/23.99-175-25R7**	264,5	208,5	21,5	56	188,5	25,0	31
24,00-25,99	175	**SD107-24.00/25.99-175-25R7**	264,5	208,5	23,5	56	188,5	25,0	31

Spare parts

For drill dia (mm)	Locking screw	Locking key
		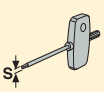
12,00-13,99	MP6SS3X12	H1.5-2D
14,00-16,99	MP6SS4X12	H2.0-2D
17,00-19,99	MP6SS5X16	H2.5-2D
20,00-25,99	MP6SS5X16	H2.5-2D

Accessories*

Torque key	Replacement blade
	
H00-1509	H00-1.5
H00-2020	H00-2.0
H00-2530	H00-2.5
H00-2535	H00-2.5

* Accessories not included in delivery

Crowns – Geometry -P, -M and -K

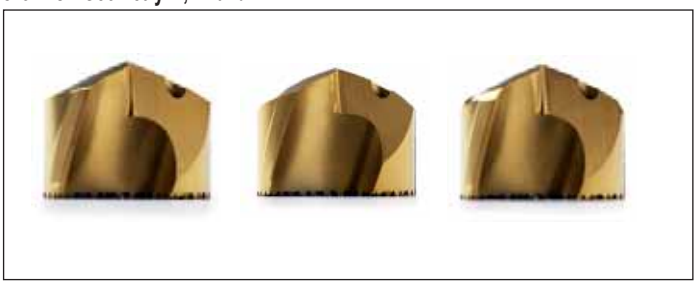

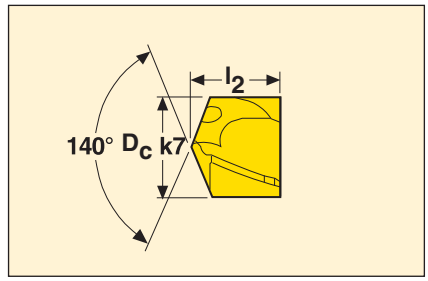

P-geometry for steel	M-geometry for stainless steels and high temp alloys	K-geometry for cast iron	D_c	l_2	Reamer size*
SD100-10.00-P	SD100-10.00-M	SD100-10.00-K	10,00	8,1	–
SD100-10.20-P	SD100-10.20-M	SD100-10.20-K	10,20	8,1	–
SD100-10.30-P	-	-	10,30	8,1	–
SD100-10.319-P	SD100-10.319-M	-	10,319	8,1	–
SD100-10.40-P	-	-	10,40	8,1	–
SD100-10.50-P	SD100-10.50-M	SD100-10.50-K	10,50	8,5	–
SD100-10.70-P	-	-	10,70	8,5	–
SD100-10.716-P	SD100-10.716-M	-	10,716	8,5	–
SD100-10.80-P	SD100-10.80-M	SD100-10.80-K	10,80	8,5	11 H6/11 H7
SD100-10.90-P	SD100-10.90-M	-	10,90	8,5	–
SD100-11.00-P	SD100-11.00-M	SD100-11.00-K	11,00	8,8	–
SD100-11.113-P	SD100-11.113-M	-	11,113	8,8	–
SD100-11.20-P	SD100-11.20-M	-	11,20	8,8	–
SD100-11.30-P	-	-	11,30	8,8	–
SD100-11.50-P	-	-	11,50	9,4	–
SD100-11.509-P	SD100-11.509-M	-	11,509	9,4	–
SD100-11.70-P	-	-	11,70	9,4	–
SD100-11.80-P	SD100-11.80-M	SD100-11.80-K	11,80	9,4	12 H6/12 H7
SD100-11.907-P	SD100-11.907-M	-	11,907	9,4	–
SD100-12.00-P	SD100-12.00-M	SD100-12.00-K	12,00	9,6	–
SD100-12.10-P	-	-	12,10	9,6	–
SD100-12.20-P	-	-	12,20	9,6	–
SD100-12.30-P	SD100-12.30-M	SD100-12.30-K	12,30	9,6	–
SD100-12.41-P	SD100-12.41-M	-	12,41	9,6	–
SD100-12.50-P	SD100-12.50-M	SD100-12.50-K	12,50	10,0	–
SD100-12.60-P	-	-	12,60	10,0	–
SD100-12.70-P	SD100-12.70-M	SD100-12.70-K	12,70	10,0	13 H6
SD100-12.80-P	SD100-12.80-M	SD100-12.80-K	12,80	10,0	13 H6/13 H7
SD100-12.90-P	SD100-12.90-M	-	12,90	10,0	–
SD100-13.00-P	SD100-13.00-M	SD100-13.00-K	13,00	10,4	–
SD100-13.10-P	SD100-13.10-M	SD100-13.10-K	13,10	10,4	–
SD100-13.20-P	-	-	13,20	10,4	–
SD100-13.30-P	SD100-13.30-M	-	13,30	10,4	–
SD100-13.50-P	SD100-13.50-M	SD100-13.50-K	13,50	10,4	–
SD100-13.70-P	SD100-13.70-M	-	13,70	10,4	14 H6
SD100-13.80-P	SD100-13.80-M	SD100-13.80-K	13,80	10,4	14 H6/14 H7
SD100-13.89-P	SD100-13.89-M	-	13,89	10,4	–
SD100-14.00-P	SD100-14.00-M	SD100-14.00-K	14,00	11,0	–
SD100-14.10-P	-	-	14,10	11,0	–
SD100-14.20-P	SD100-14.20-M	SD100-14.20-K	14,20	11,0	–
SD100-14.29-P	SD100-14.29-M	SD100-14.29-K	14,29	11,0	–
SD100-14.40-P	-	-	14,40	11,0	–
SD100-14.50-P	SD100-14.50-M	SD100-14.50-K	14,50	11,0	–
SD100-14.68-P	SD100-14.68-M	SD100-14.68-K	14,68	11,0	–
SD100-14.70-P	SD100-14.70-M	SD100-14.70-K	14,70	11,0	15 H6

* For futher information on what reamer to use and how to use it see page 317.

Crowns – Geometry -P, -M and -K

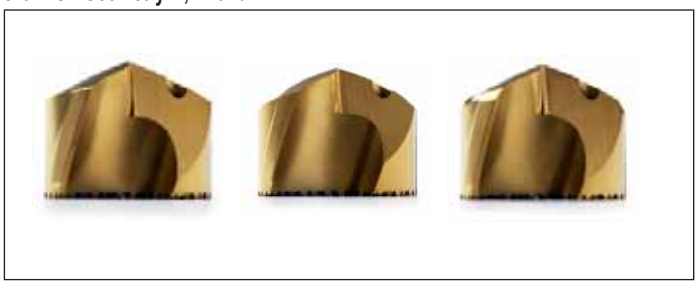

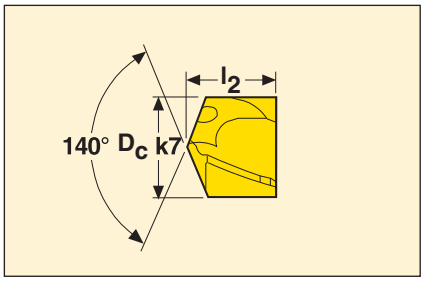

P-geometry for steel	M-geometry for stainless steels and high temp alloys	K-geometry for cast iron	D_c	l_2	Reamer size*
SD100-14.80-P	SD100-14.80-M	SD100-14.80-K	14,80	11,0	15 H6/15 H7
SD100-15.00-P	SD100-15.00-M	SD100-15.00-K	15,00	11,9	–
SD100-15.08-P	SD100-15.08-M	-	15,08	11,9	–
SD100-15.10-P	-	-	15,10	11,9	–
SD100-15.20-P	-	-	15,20	11,9	–
SD100-15.25-P	SD100-15.25-M	SD100-15.25-K	15,25	11,9	–
SD100-15.48-P	SD100-15.48-M	SD100-15.48-K	15,48	11,9	–
SD100-15.50-P	SD100-15.50-M	SD100-15.50-K	15,50	11,9	–
SD100-15.70-P	SD100-15.70-M	SD100-15.70-K	15,70	11,9	16 H6
SD100-15.80-P	SD100-15.80-M	SD100-15.80-K	15,80	11,9	16 H6/16 H7
SD100-15.88-P	SD100-15.88-M	SD100-15.88-K	15,88	11,9	16 H6/16 H7
SD100-16.00-P	SD100-16.00-M	SD100-16.00-K	16,00	12,6	–
SD100-16.10-P	-	-	16,10	12,6	–
SD100-16.20-P	-	-	16,20	12,6	–
SD100-16.25-P	-	-	16,25	12,6	–
SD100-16.27-P	SD100-16.27-M	SD100-16.27-K	16,27	12,6	–
SD100-16.40-P	-	SD100-16.40-K	16,40	12,6	–
SD100-16.50-P	SD100-16.50-M	SD100-16.50-K	16,50	12,6	–
SD100-16.67-P	SD100-16.67-M	SD100-16.67-K	16,67	12,6	–
SD100-16.70-P	SD100-16.70-M	SD100-16.70-K	16,70	12,6	17 H6
SD100-16.80-P	SD100-16.80-M	SD100-16.80-K	16,80	12,6	17 H6/17 H7
SD100-16.90-P	SD100-16.90-M	-	16,90	12,6	–
SD100-17.00-P	SD100-17.00-M	SD100-17.00-K	17,00	13,3	–
SD100-17.07-P	SD100-17.07-M	SD100-17.07-K	17,07	13,3	–
SD100-17.10-P	-	-	17,10	13,3	–
SD100-17.20-P	-	SD100-17.20-K	17,20	13,3	–
-	-	SD100-17.30-K	17,30	13,3	–
SD100-17.46-P	SD100-17.46-M	SD100-17.46-K	17,46	13,3	–
SD100-17.50-P	SD100-17.50-M	SD100-17.50-K	17,50	13,3	–
SD100-17.70-P	SD100-17.70-M	SD100-17.70-K	17,70	13,3	18 H6
SD100-17.80-P	SD100-17.80-M	SD100-17.80-K	17,80	13,3	18 H6/18 H7
SD100-17.86-P	SD100-17.86-M	SD100-17.86-K	17,86	13,3	18 H6/18 H7
SD100-17.90-P	SD100-17.90-M	-	17,90	13,3	–
SD100-18.00-P	SD100-18.00-M	SD100-18.00-K	18,00	14,4	–
SD100-18.10-P	-	-	18,10	14,4	–
SD100-18.20-P	-	-	18,20	14,4	–
SD100-18.26-P	SD100-18.26-M	SD100-18.26-K	18,26	14,4	–
SD100-18.50-P	SD100-18.50-M	SD100-18.50-K	18,50	14,4	–
SD100-18.65-P	SD100-18.65-M	-	18,65	14,4	–
SD100-18.70-P	SD100-18.70-M	SD100-18.70-K	18,70	14,4	19 H6/19 H7
SD100-18.80-P	SD100-18.80-M	SD100-18.80-K	18,80	14,4	19 H6/19 H7
SD100-18.90-P	SD100-18.90-M	-	18,90	14,4	–
SD100-19.00-P	SD100-19.00-M	SD100-19.00-K	19,00	15,2	–
SD100-19.05-P	SD100-19.05-M	SD100-19.05-K	19,05	15,2	–

* For futher information on what reamer to use and how to use it see page 317

Crowns – Geometry -P, -M and -K

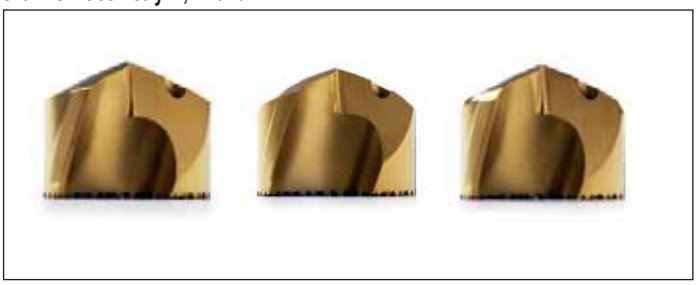

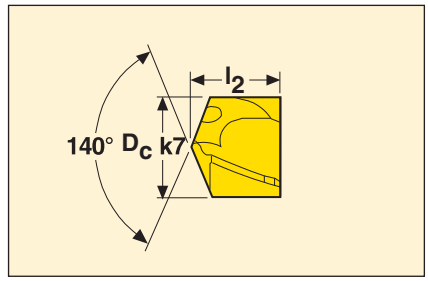

P-geometry for steel	M-geometry for stainless steels and high temp alloys	K-geometry for cast iron	D_c	l_2	Reamer size*
SD100-19.10-P	-	-	19,10	15,2	–
-	-	-	19,22	15,2	–
SD100-19.25-P	-	-	19,25	15,2	–
SD100-19.45-P	SD100-19.45-M	SD100-19.45-K	19,45	15,2	–
SD100-19.50-P	SD100-19.50-M	SD100-19.50-K	19,50	15,2	–
SD100-19.70-P	SD100-19.70-M	SD100-19.70-K	19,70	15,2	20 H6
SD100-19.80-P	SD100-19.80-M	SD100-19.80-K	19,80	15,2	20 H6/20 H7
SD100-19.84-P	SD100-19.84-M	-	19,84	15,2	20 H6/20 H7
SD100-19.90-P	SD100-19.90-M	-	19,90	15,2	–
SD100-19.99-P	-	-	19,99	15,2	–
SD100-20.00-P	SD100-20.00-M	SD100-20.00-K	20,00	15,2	–
SD100-20.241-P	-	-	20,241	15,2	–
SD100-20.50-P	SD100-20.50-M	SD100-20.50-K	20,50	15,2	–
SD100-20.638-P	SD100-20.638-M	-	20,638	15,2	–
SD100-20.80-P	SD100-20.80-M	SD100-20.80-K	20,80	15,2	21 H6/21 H7
SD100-20.90-P	SD100-20.90-M	-	20,90	15,2	–
SD100-21.00-P	SD100-21.00-M	SD100-21.00-K	21,00	15,2	–
SD100-21.034-P	-	-	21,034	15,2	–
SD100-21.20-P	-	-	21,20	15,2	–
SD100-21.30-P	-	-	21,30	15,2	–
SD100-21.430-P	SD100-21.430-M	-	21,430	15,2	–
SD100-21.50-P	SD100-21.50-M	SD100-21.50-K	21,50	15,2	–
SD100-21.80-P	SD100-21.80-M	SD100-21.80-K	21,80	15,2	22 H6/22 H7
SD100-21.829-P	-	-	21,829	15,2	–
SD100-21.90-P	SD100-21.90-M	-	21,90	15,2	–
SD100-22.00-P	SD100-22.00-M	SD100-22.00-K	22,00	15,2	–
SD100-22.225-P	SD100-22.225-M	-	22,225	15,2	–
SD100-22.621-P	-	-	22,621	15,2	–
SD100-22.50-P	SD100-22.50-M	SD100-22.50-K	22,50	15,2	–
SD100-22.80-P	SD100-22.80-M	SD100-22.80-K	22,80	15,2	23 H6/23 H7
SD100-22.90-P	SD100-22.90-M	-	22,90	15,2	–
SD100-23.00-P	SD100-23.00-M	SD100-23.00-K	23,00	15,2	–
SD100-23.416-P	-	-	23,416	15,2	–
SD100-23.50-P	SD100-23.50-M	SD100-23.50-K	23,50	15,2	–
SD100-23.813-P	SD100-23.813-M	SD100-23.813-K	23,813	15,2	24 H6/24 H7
SD100-23.90-P	SD100-23.90-M	-	23,90	15,2	–
SD100-24.00-P	SD100-24.00-M	SD100-24.00-K	24,00	15,2	–
SD100-24.209-P	-	-	24,209	15,2	–
SD100-24.50-P	SD100-24.50-M	SD100-24.50-K	24,50	15,2	–
SD100-24.605-P	-	-	24,605	15,2	–
SD100-24.80-P	SD100-24.80-M	SD100-24.80-K	24,80	15,2	25 H6/25 H7
SD100-24.90-P	SD100-24.90-M	-	24,90	15,2	–
SD100-25.00-P	SD100-25.00-M	SD100-25.00-K	25,00	15,2	–

* For futher information on what reamer to use and how to use it see page 317.

Chamfer module



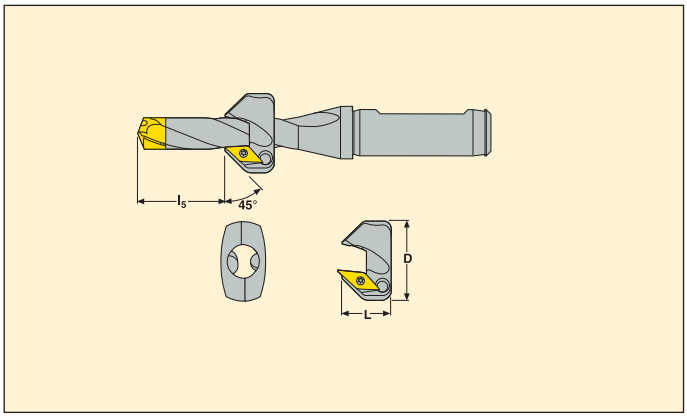

Part No.	For drill body	Drill depth					L	D
		SD101 l_5 (min-max)	SD103 l_5 (min-max)	SD105 l_5 (min-max)	SD107 l_5 (min-max)	Max chamfer depth (mm)		
SD100-C45-12.00/12.49	SD10x-12.00/12.49	12-13	12-28	28-53	53-78	1,5	19	28
SD100-C45-12.50/12.99	SD10x-12.50/12.99	12-14	12-29	29-54	54-79	1,5	19	28
SD100-C45-13.00/13.99	SD10x-13.00/13.99	13-14	13-29	29-54	54-79	1,5	19	28
SD100-C45-14.00/14.99	SD10x-14.00/14.99	14-20	14-40	40-70	70-100	2,0	19	31
SD100-C45-15.00/15.99	SD10x-15.00/15.99	14-21	14-41	41-71	71-101	2,0	19	31
SD100-C45-16.00/16.99	SD10x-16.00/16.99	15-22	15-42	42-72	72-102	2,0	19	31
SD100-C45-17.00/17.99	SD10x-17.00/17.99	16-25	16-51	51-87	87-123	2,0	19	36
SD100-C45-18.00/18.99	SD10x-18.00/18.99	17-26	17-52	52-88	88-124	2,0	19	36
SD100-C45-19.00/19.99	SD10x-19.00/19.99	18-27	18-53	53-89	89-125	2,0	19	36

Spare Parts (included in delivery)

For drill dia (mm)	Insert screw		Key (Flag)	Locking key
	Insert	Module	Insert	Module
SD100-12.00–16.99	CO2505-T08P	CO4011-T15P	T07P-2	T15P-2
SD100-17.00–19.99	C02505-T08P	CO5012-T15P	T07P-2	T15P-2

Insert

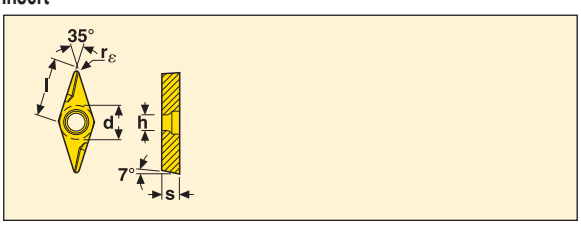

Size	Dimensions in mm				
	d	l	s	h	r_ε
09	5,556	9,000	2,500	2,900	0,2
Part No.	T400D				
VCGX090202-D1	■				

Chamfer module – Mounting instruction/placement of module

1

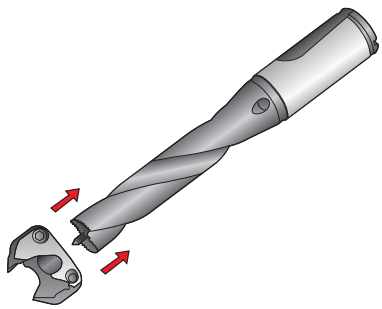

Fit the module on the drill without chamfer insert or crown mounted.

2

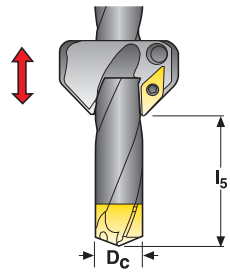

If possible, place the module as close to the shank as possible.

D_c		l_5 drilling depth SD101 (min-max)		SD103 (min-max)	
(mm)	(inch)	(mm)	(inch)	(mm)	(inch)
12	.472	12-13	.472-.512	12-28	.472-1.102
12,5	.492	12-14	.472-.551	12-29	.472-1.142
13	.512	13-14	.512-.551	13-29	.512-1.142
14	.551	14-20	.551-.787	14-40	.551-1.575
15	.591	14-21	.551-.827	14-41	.551-1.614
16	.630	15-22	.591-.866	15-42	.591-1.654
17	.669	16-25	.630-.984	16-51	.630-2.008
18	.709	17-26	.669-1.024	17-52	.669-2.047
19	.748	18-27	.709-1.063	18-53	.709-2.087

3

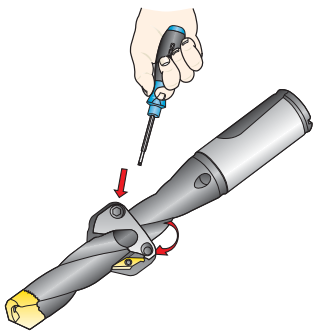

D_c		M	
(mm)	(inch)	(mm)	(in-lbs)
12-19	.472-.748	3-4	26-35

Tighten both screws according to the table above.

2

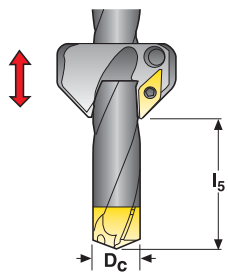

If possible, place the module as close to the shank as possible.

D_c		l_5 drilling depth SD105 (min-max)		SD107 (min-max)	
(mm)	(inch)	(mm)	(inch)	(mm)	(inch)
12	.472	28-53	1.102-2.087	53-78	2.087-3.071
12,5	.492	29-54	1.142-2.126	54-79	2.126-3.110
13	.512	29-54	1.142-2.126	54-79	2.126-3.110
14	.551	40-70	1.575-2.756	70-100	2.756-3.937
15	.591	41-71	1.614-2.785	71-101	2.795-3.976
16	.630	42-72	1.654-2.835	72-102	2.835-4.016
17	.669	51-87	2.008-3.425	87-123	3.425-4.843
18	.709	52-88	2.047-3.465	88-124	3.465-4.882
19	.748	53-89	2.087-3.504	89-125	3.504-4.921

Chamfer module – Cutting data

The recommended cutting speeds and feeds for Crownloc® on page 148-151 should also be used during the chamfering operation.

Troubleshooting

Vibrations during chamfering	• Reduce cutting speed • If possible, move the module closer to the shank of the drill. • If possible, use a shorter drill

Maximum chamfer depth

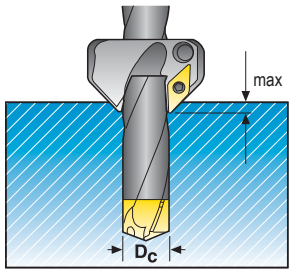

D_c		Max	
(mm)	(inch)	(Nm)	(inch)
12-13	.472-.512	1,5	.059
14-19	.551-.748	2	.079

Cutting data – SD101 – Ø10-26

SMG		f									v_c
		Ø10.00	Ø12.00	Ø14.00	Ø16.00	Ø18.00	Ø20.00	Ø22.00	Ø24.00	Ø26.00	
P1	P	0,20	0,24	0,26	0,28	0,30	0,32	0,34	0,34	0,36	125
P2	P	0,20	0,24	0,26	0,28	0,30	0,32	0,34	0,36	0,36	120
P3	P	0,19	0,22	0,24	0,26	0,28	0,30	0,32	0,34	0,34	105
P4	P	0,19	0,22	0,24	0,26	0,28	0,30	0,32	0,32	0,34	95
P5	P	0,19	0,22	0,24	0,26	0,28	0,30	0,30	0,32	0,34	90
P6	P	0,18	0,22	0,24	0,26	0,28	0,28	0,30	0,32	0,32	100
P7	P	0,18	0,22	0,24	0,26	0,28	0,28	0,30	0,32	0,32	95
P8	P	0,19	0,22	0,24	0,26	0,28	0,30	0,32	0,34	0,34	90
P11	P	0,18	0,22	0,24	0,26	0,28	0,28	0,30	0,32	0,32	90
M1	M	0,14	0,15	0,15	0,16	0,16	0,16	0,17	0,17	0,17	85
M2	M	0,13	0,13	0,14	0,14	0,15	0,15	0,15	0,16	0,16	70
M3	M	0,10	0,11	0,11	0,11	0,12	0,12	0,12	0,12	0,13	50
M4	M	0,090	0,095	0,095	0,10	0,10	0,10	0,11	0,11	0,11	39
M5	M	0,090	0,095	0,095	0,10	0,10	0,10	0,11	0,11	0,11	33
K1	K	0,28	0,32	0,34	0,36	0,38	0,40	0,42	0,42	0,44	100
K2	K	0,26	0,28	0,30	0,32	0,34	0,36	0,38	0,38	0,40	85
K3	K	0,26	0,28	0,30	0,32	0,34	0,36	0,38	0,38	0,40	70
K4	K	0,26	0,28	0,30	0,32	0,34	0,36	0,38	0,38	0,40	70
K5	K	0,24	0,26	0,28	0,30	0,32	0,32	0,34	0,36	0,36	41
N1	M	0,18	0,19	0,19	0,20	0,20	0,20	0,22	0,22	0,22	335
N2	M	0,18	0,19	0,19	0,20	0,20	0,20	0,22	0,22	0,22	215
N3	M	0,18	0,19	0,19	0,20	0,20	0,20	0,22	0,22	0,22	145
N11	M	0,18	0,19	0,19	0,20	0,20	0,20	0,22	0,22	0,22	170
S1	M	0,090	0,095	0,095	0,10	0,10	0,10	0,11	0,11	0,11	34
S2	M	0,090	0,095	0,095	0,10	0,10	0,10	0,11	0,11	0,11	25
S3	M	0,085	0,085	0,090	0,095	0,095	0,095	0,10	0,10	0,11	25
S11	M	0,10	0,11	0,11	0,11	0,12	0,12	0,12	0,12	0,13	65
S12	M	0,10	0,11	0,11	0,11	0,12	0,12	0,12	0,12	0,13	49
S13	M	0,090	0,095	0,095	0,10	0,10	0,10	0,11	0,11	0,11	38
H3	P	0,085	0,095	0,11	0,12	0,12	0,13	0,14	0,14	0,15	27
H5	P	0,13	0,15	0,16	0,18	0,19	0,20	0,20	0,22	0,22	49
H7	P	0,085	0,095	0,11	0,12	0,12	0,13	0,14	0,14	0,15	27
H8	P	0,095	0,11	0,12	0,13	0,14	0,15	0,16	0,17	0,17	49
H11	P	0,13	0,15	0,16	0,18	0,19	0,20	0,20	0,22	0,22	65
H12	P	0,13	0,15	0,16	0,18	0,19	0,20	0,20	0,22	0,22	100
H21	P	0,095	0,11	0,12	0,13	0,14	0,15	0,16	0,17	0,17	49

SMG = Seco material group
f = mm/rev
v_c= m/min
All cutting data are start values

Cutting data – SD103 – Ø10-26

SMG		f									v_c
		Ø10.00	Ø12.00	Ø14.00	Ø16.00	Ø18.00	Ø20.00	Ø22.00	Ø24.00	Ø26.00	
P1	P	0,20	0,24	0,26	0,28	0,30	0,32	0,34	0,34	0,36	120
P2	P	0,20	0,24	0,26	0,28	0,30	0,32	0,34	0,36	0,36	115
P3	P	0,19	0,22	0,24	0,26	0,28	0,30	0,32	0,34	0,34	100
P4	P	0,19	0,22	0,24	0,26	0,28	0,30	0,32	0,32	0,34	85
P5	P	0,19	0,22	0,24	0,26	0,28	0,30	0,30	0,32	0,34	85
P6	P	0,18	0,22	0,24	0,26	0,28	0,28	0,30	0,32	0,32	95
P7	P	0,18	0,22	0,24	0,26	0,28	0,28	0,30	0,32	0,32	90
P8	P	0,19	0,22	0,24	0,26	0,28	0,30	0,32	0,34	0,34	85
P11	P	0,18	0,22	0,24	0,26	0,28	0,28	0,30	0,32	0,32	85
M1	M	0,14	0,15	0,15	0,16	0,16	0,16	0,17	0,17	0,17	80
M2	M	0,13	0,13	0,14	0,14	0,15	0,15	0,15	0,16	0,16	65
M3	M	0,10	0,11	0,11	0,11	0,12	0,12	0,12	0,12	0,13	49
M4	M	0,090	0,095	0,095	0,10	0,10	0,10	0,11	0,11	0,11	37
M5	M	0,090	0,095	0,095	0,10	0,10	0,10	0,11	0,11	0,11	31
K1	K	0,28	0,32	0,34	0,36	0,38	0,40	0,42	0,42	0,44	90
K2	K	0,26	0,28	0,30	0,32	0,34	0,36	0,38	0,38	0,40	80
K3	K	0,26	0,28	0,30	0,32	0,34	0,36	0,38	0,38	0,40	65
K4	K	0,26	0,28	0,30	0,32	0,34	0,36	0,38	0,38	0,40	65
K5	K	0,24	0,26	0,28	0,30	0,32	0,32	0,34	0,36	0,36	38
N1	M	0,18	0,19	0,19	0,20	0,20	0,20	0,22	0,22	0,22	315
N2	M	0,18	0,19	0,19	0,20	0,20	0,20	0,22	0,22	0,22	200
N3	M	0,18	0,19	0,19	0,20	0,20	0,20	0,22	0,22	0,22	135
N11	M	0,18	0,19	0,19	0,20	0,20	0,20	0,22	0,22	0,22	160
S1	M	0,090	0,095	0,095	0,10	0,10	0,10	0,11	0,11	0,11	32
S2	M	0,090	0,095	0,095	0,10	0,10	0,10	0,11	0,11	0,11	23
S3	M	0,085	0,085	0,090	0,095	0,095	0,095	0,10	0,10	0,11	23
S11	M	0,10	0,11	0,11	0,11	0,12	0,12	0,12	0,12	0,13	60
S12	M	0,10	0,11	0,11	0,11	0,12	0,12	0,12	0,12	0,13	46
S13	M	0,090	0,095	0,095	0,10	0,10	0,10	0,11	0,11	0,11	36
H3	P	0,085	0,095	0,11	0,12	0,12	0,13	0,14	0,14	0,15	25
H5	P	0,13	0,15	0,16	0,18	0,19	0,20	0,20	0,22	0,22	46
H7	P	0,085	0,095	0,11	0,12	0,12	0,13	0,14	0,14	0,15	25
H8	P	0,095	0,11	0,12	0,13	0,14	0,15	0,16	0,17	0,17	46
H11	P	0,13	0,15	0,16	0,18	0,19	0,20	0,20	0,22	0,22	60
H12	P	0,13	0,15	0,16	0,18	0,19	0,20	0,20	0,22	0,22	95
H21	P	0,095	0,11	0,12	0,13	0,14	0,15	0,16	0,17	0,17	46

SMG = Seco material group
f = mm/rev
v_c= m/min
All cutting data are start values

Cutting data – SD105 – Ø10-26

SMG		f									v_c
		Ø10.00	Ø12.00	Ø14.00	Ø16.00	Ø18.00	Ø20.00	Ø22.00	Ø24.00	Ø26.00	
P1	P	0,20	0,24	0,26	0,28	0,30	0,32	0,34	0,34	0,36	110
P2	P	0,20	0,24	0,26	0,28	0,30	0,32	0,34	0,36	0,36	110
P3	P	0,19	0,22	0,24	0,26	0,28	0,30	0,32	0,34	0,34	95
P4	P	0,19	0,22	0,24	0,26	0,28	0,30	0,32	0,32	0,34	85
P5	P	0,19	0,22	0,24	0,26	0,28	0,30	0,30	0,32	0,34	80
P6	P	0,18	0,22	0,24	0,26	0,28	0,28	0,30	0,32	0,32	90
P7	P	0,18	0,22	0,24	0,26	0,28	0,28	0,30	0,32	0,32	85
P8	P	0,19	0,22	0,24	0,26	0,28	0,30	0,32	0,34	0,34	80
P11	P	0,18	0,22	0,24	0,26	0,28	0,28	0,30	0,32	0,32	80
M1	M	0,14	0,15	0,15	0,16	0,16	0,16	0,17	0,17	0,17	75
M2	M	0,13	0,13	0,14	0,14	0,15	0,15	0,15	0,16	0,16	60
M3	M	0,10	0,11	0,11	0,11	0,12	0,12	0,12	0,12	0,13	46
M4	M	0,090	0,095	0,095	0,10	0,10	0,10	0,11	0,11	0,11	35
M5	M	0,090	0,095	0,095	0,10	0,10	0,10	0,11	0,11	0,11	29
K1	K	0,28	0,32	0,34	0,36	0,38	0,40	0,42	0,42	0,44	90
K2	K	0,26	0,28	0,30	0,32	0,34	0,36	0,38	0,38	0,40	75
K3	K	0,26	0,28	0,30	0,32	0,34	0,36	0,38	0,38	0,40	65
K4	K	0,26	0,28	0,30	0,32	0,34	0,36	0,38	0,38	0,40	60
K5	K	0,24	0,26	0,28	0,30	0,32	0,32	0,34	0,36	0,36	36
N1	M	0,18	0,19	0,19	0,20	0,20	0,20	0,22	0,22	0,22	300
N2	M	0,18	0,19	0,19	0,20	0,20	0,20	0,22	0,22	0,22	190
N3	M	0,18	0,19	0,19	0,20	0,20	0,20	0,22	0,22	0,22	130
N11	M	0,18	0,19	0,19	0,20	0,20	0,20	0,22	0,22	0,22	150
S1	M	0,090	0,095	0,095	0,10	0,10	0,10	0,11	0,11	0,11	30
S2	M	0,090	0,095	0,095	0,10	0,10	0,10	0,11	0,11	0,11	22
S3	M	0,085	0,085	0,090	0,095	0,095	0,095	0,10	0,10	0,11	22
S11	M	0,10	0,11	0,11	0,11	0,12	0,12	0,12	0,12	0,13	55
S12	M	0,10	0,11	0,11	0,11	0,12	0,12	0,12	0,12	0,13	44
S13	M	0,090	0,095	0,095	0,10	0,10	0,10	0,11	0,11	0,11	34
H3	P	0,085	0,095	0,11	0,12	0,12	0,13	0,14	0,14	0,15	24
H5	P	0,13	0,15	0,16	0,18	0,19	0,20	0,20	0,22	0,22	44
H7	P	0,085	0,095	0,11	0,12	0,12	0,13	0,14	0,14	0,15	24
H8	P	0,095	0,11	0,12	0,13	0,14	0,15	0,16	0,17	0,17	44
H11	P	0,13	0,15	0,16	0,18	0,19	0,20	0,20	0,22	0,22	55
H12	P	0,13	0,15	0,16	0,18	0,19	0,20	0,20	0,22	0,22	90
H21	P	0,095	0,11	0,12	0,13	0,14	0,15	0,16	0,17	0,17	44

SMG = Seco material group
f = mm/rev
v_c= m/min
All cutting data are start values

Cutting data – SD107 – Ø12-26

SMG		f								v_c
		Ø12.00	Ø14.00	Ø16.00	Ø18.00	Ø20.00	Ø22.00	Ø24.00	Ø26.00	
P1	P	0,24	0,26	0,28	0,30	0,32	0,34	0,34	0,36	110
P2	P	0,24	0,26	0,28	0,30	0,32	0,34	0,36	0,36	105
P3	P	0,22	0,24	0,26	0,28	0,30	0,32	0,34	0,34	90
P4	P	0,22	0,24	0,26	0,28	0,30	0,32	0,32	0,34	80
P5	P	0,22	0,24	0,26	0,28	0,30	0,30	0,32	0,34	75
P6	P	0,22	0,24	0,26	0,28	0,28	0,30	0,32	0,32	85
P7	P	0,22	0,24	0,26	0,28	0,28	0,30	0,32	0,32	80
P8	P	0,22	0,24	0,26	0,28	0,30	0,32	0,34	0,34	75
P11	P	0,22	0,24	0,26	0,28	0,28	0,30	0,32	0,32	80
M1	M	0,15	0,15	0,16	0,16	0,16	0,17	0,17	0,17	75
M2	M	0,13	0,14	0,14	0,15	0,15	0,15	0,16	0,16	60
M3	M	0,11	0,11	0,11	0,12	0,12	0,12	0,12	0,13	45
M4	M	0,095	0,095	0,10	0,10	0,10	0,11	0,11	0,11	34
M5	M	0,095	0,095	0,10	0,10	0,10	0,11	0,11	0,11	28
K1	K	0,32	0,34	0,36	0,38	0,40	0,42	0,42	0,44	85
K2	K	0,28	0,30	0,32	0,34	0,36	0,38	0,38	0,40	75
K3	K	0,28	0,30	0,32	0,34	0,36	0,38	0,38	0,40	60
K4	K	0,28	0,30	0,32	0,34	0,36	0,38	0,38	0,40	60
K5	K	0,26	0,28	0,30	0,32	0,32	0,34	0,36	0,36	35
N1	M	0,19	0,19	0,20	0,20	0,20	0,22	0,22	0,22	290
N2	M	0,19	0,19	0,20	0,20	0,20	0,22	0,22	0,22	185
N3	M	0,19	0,19	0,20	0,20	0,20	0,22	0,22	0,22	125
N11	M	0,19	0,19	0,20	0,20	0,20	0,22	0,22	0,22	145
S1	M	0,095	0,095	0,10	0,10	0,10	0,11	0,11	0,11	29
S2	M	0,095	0,095	0,10	0,10	0,10	0,11	0,11	0,11	21
S3	M	0,085	0,090	0,095	0,095	0,095	0,10	0,10	0,11	21
S11	M	0,11	0,11	0,11	0,12	0,12	0,12	0,12	0,13	55
S12	M	0,11	0,11	0,11	0,12	0,12	0,12	0,12	0,13	42
S13	M	0,095	0,095	0,10	0,10	0,10	0,11	0,11	0,11	33
H3	P	0,095	0,11	0,12	0,12	0,13	0,14	0,14	0,15	23
H5	P	0,15	0,16	0,18	0,19	0,20	0,20	0,22	0,22	43
H7	P	0,095	0,11	0,12	0,12	0,13	0,14	0,14	0,15	23
H8	P	0,11	0,12	0,13	0,14	0,15	0,16	0,17	0,17	43
H11	P	0,15	0,16	0,18	0,19	0,20	0,20	0,22	0,22	55
H12	P	0,15	0,16	0,18	0,19	0,20	0,20	0,22	0,22	90
H21	P	0,11	0,12	0,13	0,14	0,15	0,16	0,17	0,17	43

SMG = Seco material group
f = mm/rev
v_c= m/min
All cutting data are start values

Custom design – No waiting for quotations – Short delivery time

A well defined strategy has been created for the total process for custom-made drills from quotation to finished drill.
You can now design your own customised Crownloc® drill using the Custom Design software.

The concept gives you a number of advantages:

- No waiting for quotations! price and delivery time available instantly
- Directly visualises your needs. No risk of misunderstandings
- Short delivery time

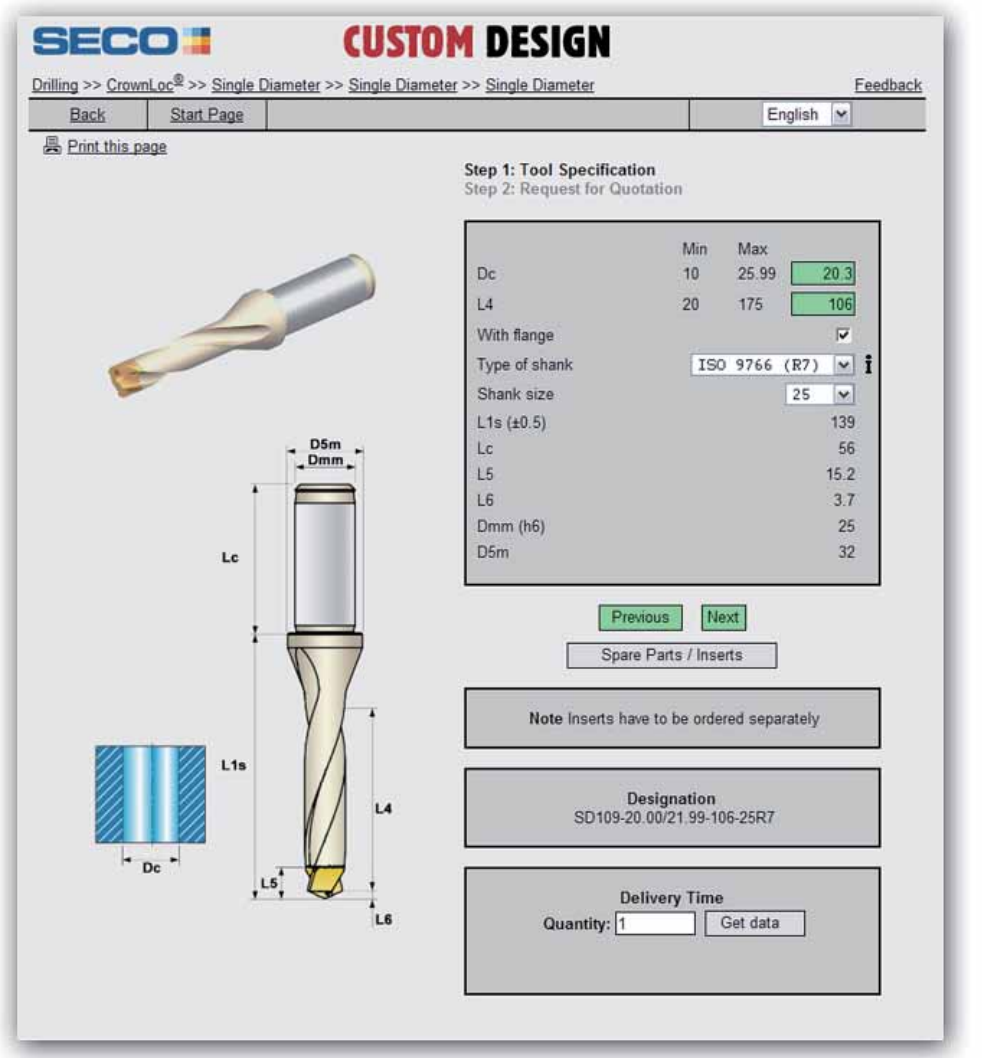

Please contact your local Seco representative for more information.

Different types of custom drills – Detailed information can be found in the Custom Design software

A1. Single diameter



A2. Reinforced



A3. Chamfer

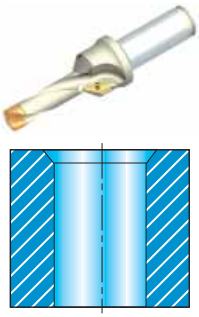

A4. Face

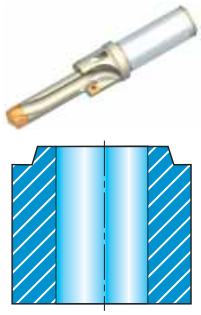

A5. Face with chamfer

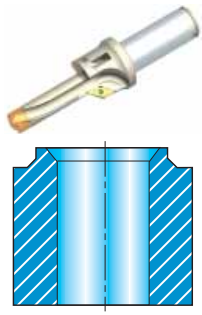

A6. Straight chip flutes



B1. Counterbore

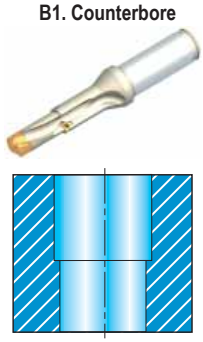

B2. Counterbore and chamfer

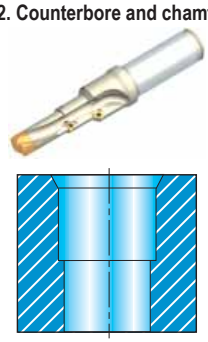

Custom design – No waiting for quotations – Short delivery time

A well defined strategy has been created for the total process for custom-made drills from quotation to finished drill.
You can now design your own customised Crownloc® crowns using the Custom Design software.

The concept gives you a number of advantages:

- No waiting for quotations! price and delivery time available instantly
- Directly visualises your needs. No risk of misunderstandings
- Short delivery time

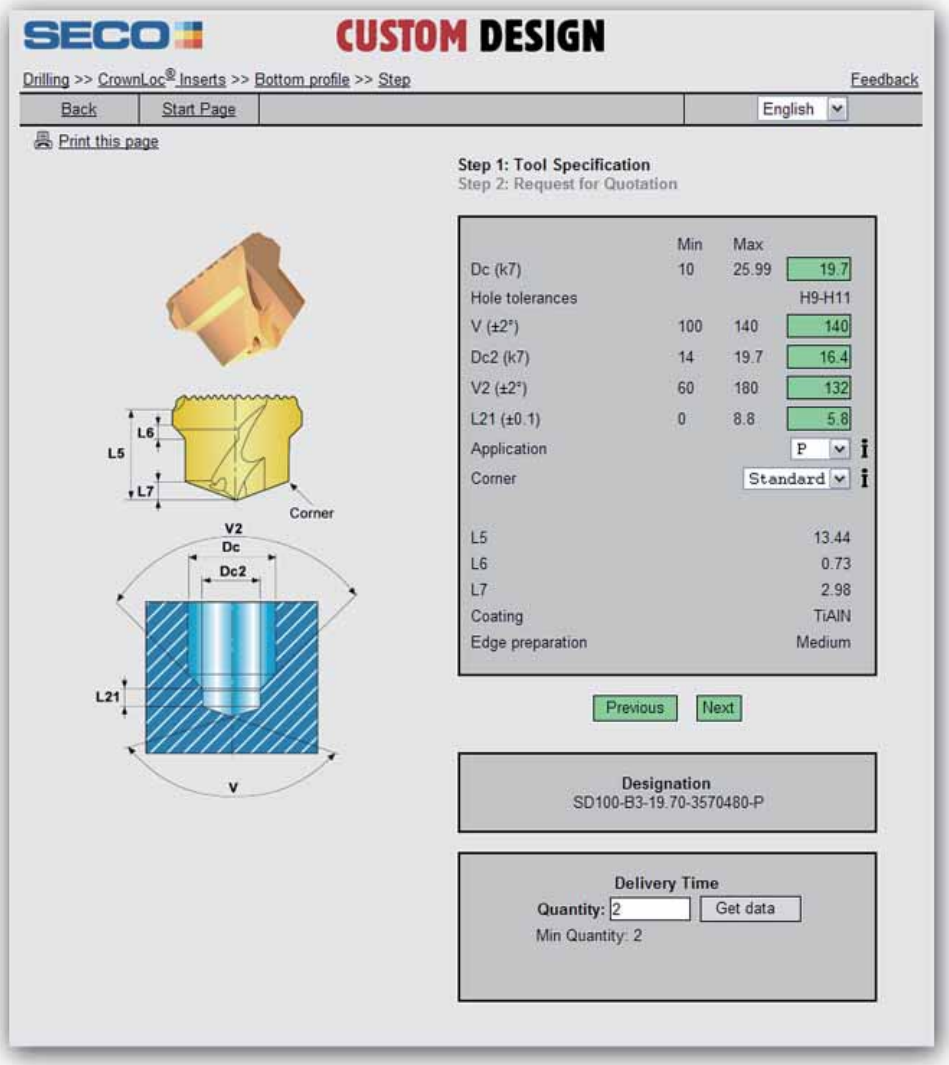

Please contact your local Seco representative for more information.

Different types of custom drills – Detailed information can be found in the Custom Design software

A1. Single diameter

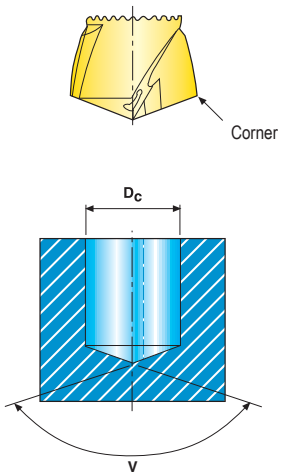

A2. -L=Long chipping materials

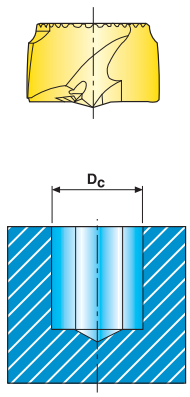

B1. Double angle

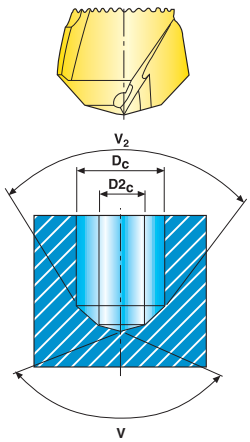

B2. Counterbore

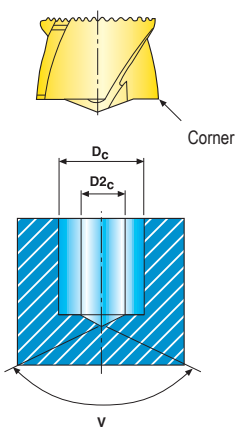

B2. Double diameter

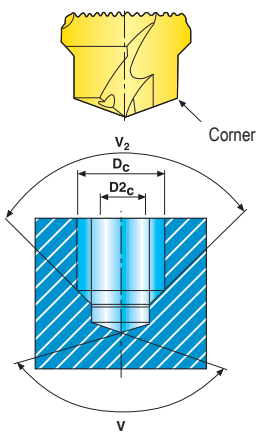

B4. Ball nose

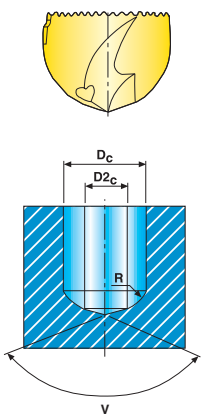

Drilling diameter,
D_C = 10,00 - 25,99
Geometry: P = Steel
M = Stainless Steel
K = Cast iron
L = Long chipping materials
N = Non ferritic materials
H = Hardened steels
Corner: Standard, chamfer, radius
V: 100–150° (standard = 140°)

Available with 10 and 13 percent cobalt for more wear resistance.
Ex: SD100-15.00-K10.

Machining data

The values in the graphs vary with e.g. cutting data, material, efficiency of the machine and tool wear.
The graphs below are valid for Seco Material Group (SMG) P5-P6 and cutting speed 90 m/min.

Net power consumption

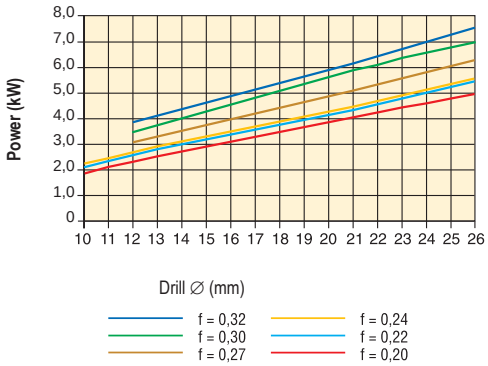

Drilling torque

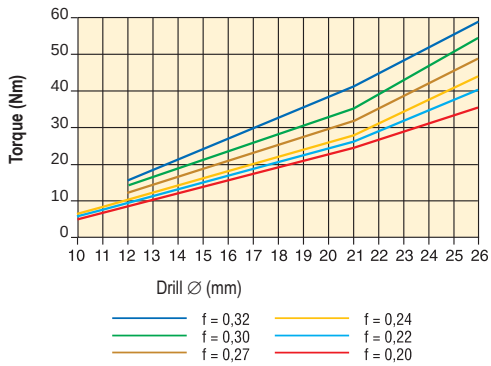

Feed force

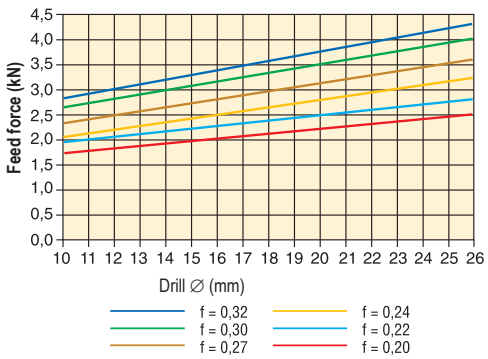

Coolant flow at different pressures

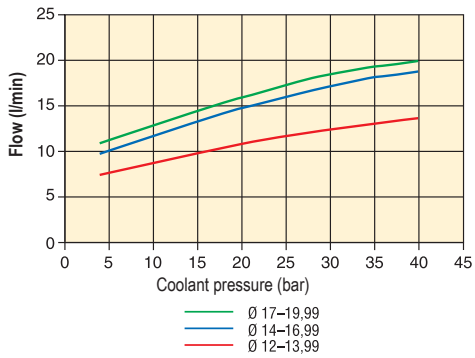

Hole tolerances/Surface finish

SD101, SD103, SD105 and SD107 IT9-10 / R_a 1-4*		
Drill ∅ D_c (mm)	IT9 tolerance (µm)	IT10 tolerance (µm)
10-18	43	70
18-30	52	84

*Deterioration of surface finish and hole tolerance can occur when drilling in low carbon steel or stainless steel.
Use the shortest drill possible for best hole quality.

Recommended coolant flow Dx1 l/min
Minimum coolant flow D/2 l/min
D = Drill diameter
Minimum recommended coolant pressure 10 bar with < 3 x D
Minimum recommended coolant pressure 20 bar with > 3 x D
Minimum recommended coolant pressure 40 bar with > 5 x D

Coolant mix

Recommended emulsion mix is 6–8%.
When drilling in stainless steels, superalloys and high strength steels a mix of 10% is recommended.

Machining recommendations

It is possible to drill stacked material as long as the pieces are securely clamped together, so that there are no air gaps between the parts. Air gaps can affect chip evacuation, and thereby damage the drill.

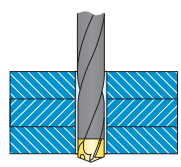

Troubleshooting – Initial check points:

- Fixturing stability
- Machine spindle condition
- Tool holder condition
- Clamping of tool:
  - Run-out within 0.06 TIR
- Chip evacuation:
  Cutting data
- Coolant:
  - Pressure
  - Flow
  - Concentration

Cutting edges get chipped

- Reduce the feed/rev.
- If the drill vibrates, reduce the cutting speed and increase the feed rate.
- When drilling through rough, hard or angled surfaces, reduce the feed rate by 30%-50% during entrance and exit.



Unsatisfactory diameter tolerance

- Increase the feed/rev.
- Use a Seco Feedmax solid carbide drill, see pages 16-19
- Use a reaming operation, see page 317
- Use a boring operation, see page 481-482

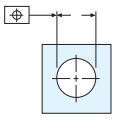

Too fast flank wear

- Check that correct geometry is used.
- Reduce the cutting speed.

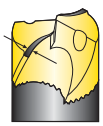

Unsatisfactory surface finish

- Reduce the feed/rev.
- Increase the cutting speed.
- Check that the correct geometry is used.
- Use a Seco Feedmax solid carbide drill, see pages 16-19
- Use a reaming operation, see page 317

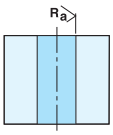

Groove wear

- Reduce the feed /rev.
- Reduce the cutting speed.
- Increase the coolant concentration.



Unsatisfactory positioning of the hole

- Reduce the feed/rev.
- If drilling through rough, hard and angled surface - reduce the feed by 30%-50% during entrance and exit.
- Pre drill with a 140° point angle.
- Use a Seco Feedmax solid carbide drill, see pages 16-19
- Use a boring operation, see page 481-482

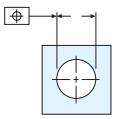

Wear of peripheral land margins

- Check that the correct geometry is used.
- Reduce the cutting speed.
- Increase the coolant concentration.
- When drilling through rough, hard or angled surfaces, reduce the feed rate by 30%-50% during entrance and exit.

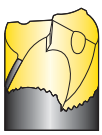

Chip jamming due to long chips

- Increase the feed.
- In long chipping materials SMG P1-P4, SMG M1-M2:
- Increase cutting speed and reduce feed/rev.
- Use the L geometry (Custom Deign).

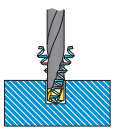

Breakage at hole exit

- If the crown connection breaks when the crown is just about to break through the material. The failure is caused by:
- The interface has not been cleaned thoroughly and there is still dirt or chips left between crown and drill body.
- The crown has not been clamped securely. Use the torque key.
- Too few threads are holding the crown.

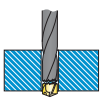

Chipping of the locking interface

- Minor chipping is not hazardous to the locking system. It will not affect the drilling result.
- If major chipping occurs when using a high feed rate or when drilling through angled surfaces - reduce the feed rate.

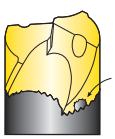



Range overview

Crownloc®Plus	∅ Range	Drill depth	Crown tolerance	Hole tolerance (1)	Surface finish (2)
SD403  **Pages 162-163**	12,00–19,99	~ 3 x D	k7	IT9-10	R_a 1–3 µm
SD405  **Pages 164-165**	12,00–19,99	~ 5 x D	k7	IT10	R_a 1–3 µm
SD408  **Pages 166-167**	12,00–19,99	~ 8 x D	k7	IT10	R_a 1–3 µm

1) Variations can occur depending on the material and the cutting data used.
2) Drill depth, cutting data, coolant pressure and material can cause deterioration of the surface finish.

Code key Crownloc®Plus

SD403	-	14.00/14.99	-	45	-	16	R	7
Type of drill SD403: 3 x D SD405: 5 x D SD408: 8 x D		Min/max Crown diameter		Drilling depth		Shank diameter	Right hand rotation	Type of shank 1. Cylindrical 7. ISO 9766



Code key Crowns

SD400	-	14.00	-	P
		Drill diameter		Type of geometry P - Steel M - Stainless steel and HRSA L - Ductile material (e.g. low carbon steel)

Geometries

P-geometry - Universal geometry	M-geometry - For stainless steels and high temp alloys	L-geometry - For ductile long chipping materials
		

Mounting instructions

1.



To unclamp the crown, find the two flats on the Crown for the key.

2.



Turn the key counterclockwise to unclamp it with a quarter of a turn.

3.



Clean the connection, before mounting the crown.

4.



Pre-clamp the crown with your fingers for easier clamping, before using the key.

5.

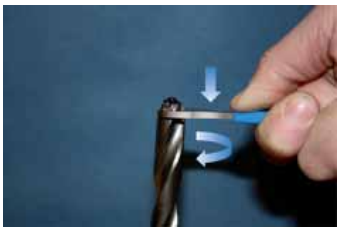

Simultaneously press down the crown when clamping on a quarter of a turn clockwise using the key and keep it perpendicular to the drill body.

6.



When the crown is mounted in the drill body, full contact should be achieved in the connection between the suporting surfaces of the drill body and the Crown, see picture.

1. Stability
The stability of the application is important to obtain the best tool life and hole accuracy. Check the condition of the machine spindle, fixture and fixturing of the component to secure maximum stability and rigidity.
Unstable conditions can cause tool breakages.

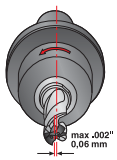

2. Rotating
Total Indicated Run-out (TIR) should not exceed 0,06 mm in a rotating application. Measure the run-out when turning the drill 360° in the spindle.

3. Stationary
The distance between the drill point and the rotating centre of the workpiece should not exceed 0.03 mm radially in a stationary application.

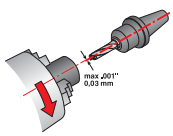

4. Recommended tool holders
For best results, use holders type BT JIS B 6339-ADB, Type 5672, High precision chuck.
For further information see EPB (tooling) catalogue.



Weldon



Hydraulic chuck
(For cylindrical, -R1 shanks only)



High precision collet chuck
(For cylindrical, -R1 shanks only)

Drilling depth ~ 3 x D

SD403 -R7 shank



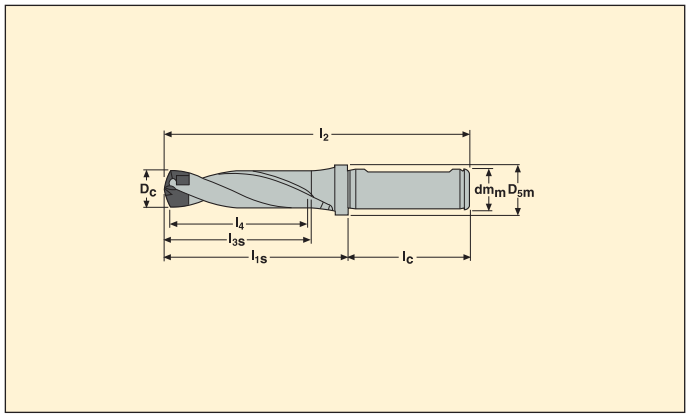

- ISO9766 fits holders: Weldon 1835B, ISO 5414, DIN 60880
- Internal coolant
- For cutting and machining data see page 170

D_c	l_4	Part No.	Dimensions in mm					
			l_2	l_{1s}	l_c	l_{3s}	dm_m	D_{5m}
12,00-12,49	38	**SD403-12.00/12.49-38-16R7**	106,2	58,2	48	46,2	16	20
12,50-12,99	39	**SD403-12.50/12.99-39-16R7**	108	60	48	47,5	16	20
13,00-13,99	42	**SD403-13.00/13.99-42-16R7**	111,9	63,9	48	50,9	16	20
14,00-14,99	45	**SD403-14.00/14.99-45-16R7**	116,5	68,5	48	54,5	16	20
15,00-15,99	48	**SD403-15.00/15.99-48-16R7**	121,2	73,2	48	58,2	16	20
16,00-16,99	51	**SD403-16.00/16.99-51-20R7**	127,9	77,9	50	61,9	20	24
17,00-17,99	54	**SD403-17.00/17.99-54-20R7**	132,6	82,6	50	65,6	20	24
18,00-18,99	57	**SD403-18.00/18.99-57-20R7**	137,3	87,3	50	69,3	20	24
19,00-19,99	60	**SD403-19.00/19.99-60-20R7**	142	92	50	73	20	24

Accessories*

For drill dia (mm)	Key 	
12,00-12,99	SD400-K05	
13,00-14,99	SD400-K06	
15,00-16,99	SD400-K07	
17,00-18,99	SD400-K08	
19,00-19,99	SD400-K09	

* Accessories not included in delivery

Drilling depth ~ 3 x D

SD403 -R1 shank



- Cylindrical shank (R1) fits holders: 5834 and 5672
- Internal coolant
- For cutting and machining data see page 170

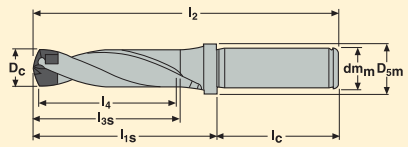

D_c	l_4	Part No.	Dimensions in mm					
			l_2	l_{1s}	l_c	l_{3s}	dm_m	D_{5m}
12,00-12,49	38	**SD403-12.00/12.49-38-16R1**	106,2	58,2	48	46,2	16	20
12,50-12,99	39	**SD403-12.50/12.99-39-16R1**	108	60	48	47,5	16	20
13,00-13,99	42	**SD403-13.00/13.99-42-16R1**	111,9	63,9	48	50,9	16	20
14,00-14,99	45	**SD403-14.00/14.99-45-16R1**	116,5	68,5	48	54,5	16	20
15,00-15,99	48	**SD403-15.00/15.99-48-16R1**	121,2	73,2	48	58,2	16	20
16,00-16,99	51	**SD403-16.00/16.99-51-20R1**	127,9	77,9	50	61,9	20	24
17,00-17,99	54	**SD403-17.00/17.99-54-20R1**	132,6	82,6	50	65,6	20	24
18,00-18,99	57	**SD403-18.00/18.99-57-20R1**	137,3	87,3	50	69,3	20	24
19,00-19,99	60	**SD403-19.00/19.99-60-20R1**	142	92	50	73	20	24

Accessories

For drill dia (mm)	Key 	
12,00-12,99	SD400-K05	
13,00-14,99	SD400-K06	
15,00-16,99	SD400-K07	
17,00-18,99	SD400-K08	
19,00-19,99	SD400-K09	

* Accessories not included in delivery

Drilling depth ~ 5 x D

SD405 -R7 shank



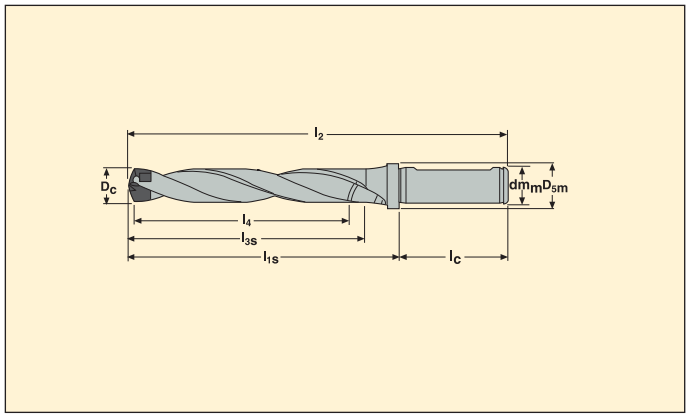

- ISO9766 fits holders: Weldon 1835B, ISO 5414, DIN 60880
- Internal coolant
- For cutting and machining data see page 171

D_c	l_4	Part No.	Dimensions in mm					
			l_2	l_{1s}	l_c	l_{3s}	dm_m	D_{5m}
12,00-12,49	63	**SD405-12.00/12.49-63-16R7**	131,2	83,2	48	71,2	16	20
12,50-12,99	65	**SD405-12.50/12.99-65-16R7**	134	86	48	73,5	16	20
13,00-13,99	70	**SD405-13.00/13.99-70-16R7**	139,9	91,9	48	78,9	16	20
14,00-14,99	75	**SD405-14.00/14.99-75-16R7**	146,5	98,5	48	84,5	16	20
15,00-15,99	80	**SD405-15.00/15.99-80-16R7**	153,2	105,2	48	90,2	16	20
16,00-16,99	85	**SD405-16.00/16.99-85-20R7**	161,9	111,9	50	95,9	20	24
17,00-17,99	90	**SD405-17.00/17.99-90-20R7**	168,6	118,6	50	101,6	20	24
18,00-18,99	95	**SD405-18.00/18.99-95-20R7**	175,3	125,3	50	107,3	20	24
19,00-19,99	100	**SD405-19.00/19.99-100-20R7**	182	132	50	113	20	24

Accessories

For drill dia (mm)	Key 	
12,00-12,99	SD400-K05	
13,00-14,99	SD400-K06	
15,00-16,99	SD400-K07	
17,00-18,99	SD400-K08	
19,00-19,99	SD400-K09	

* Accessories not included in delivery

Drilling depth ~ 5 x D

SD405 -R1 shank



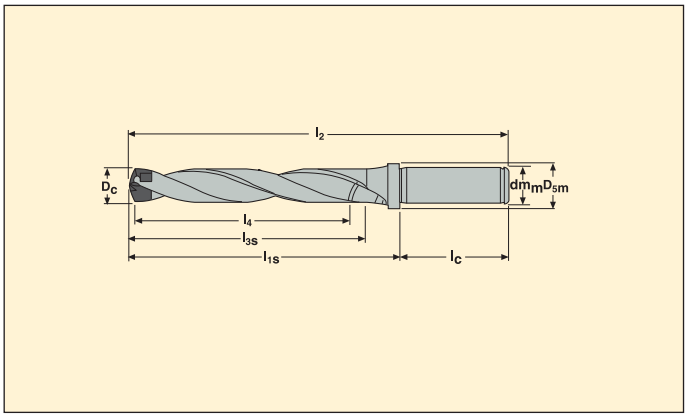

- Cylindrical shank (R1) fits holders: 5834 and 5672
- Internal coolant
- For cutting and machining data see page 171

D_c	l_4	Part No.	Dimensions in mm					
			l_2	l_{1s}	l_c	l_{3s}	dm_m	D_{5m}
12,00-12,49	63	**SD405-12.00/12.49-63-16R1**	131,2	83,2	48	71,2	16	20
12,50-12,99	65	**SD405-12.50/12.99-65-16R1**	134	86	48	73,5	16	20
13,00-13,99	70	**SD405-13.00/13.99-70-16R1**	139,9	91,9	48	78,9	16	20
14,00-14,99	75	**SD405-14.00/14.99-75-16R1**	146,5	98,5	48	84,5	16	20
15,00-15,99	80	**SD405-15.00/15.99-80-16R1**	153,2	105,2	48	90,2	16	20
16,00-16,99	85	**SD405-16.00/16.99-85-20R1**	161,9	111,9	50	95,9	20	24
17,00-17,99	90	**SD405-17.00/17.99-90-20R1**	168,6	118,6	50	101,6	20	24
18,00-18,99	95	**SD405-18.00/18.99-95-20R1**	175,3	125,3	50	107,3	20	24
19,00-19,99	100	**SD405-19.00/19.99-100-20R1**	182	132	50	113	20	24

Accessories

For drill dia (mm)	Key 	
12,00-12,99	SD400-K05	
13,00-14,99	SD400-K06	
15,00-16,99	SD400-K07	
17,00-18,99	SD400-K08	
19,00-19,99	SD400-K09	

* Accessories not included in delivery

Drilling depth ~ 8 x D

SD408 -R7 shank



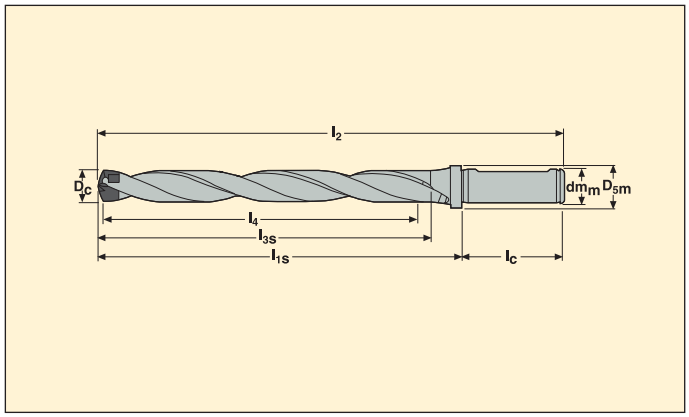

- ISO 9766 fits holders: Weldon 1835B, ISO 5414, DIN 60880
- Internal coolant
- For cutting and machining data see page 172

D_c	l_4	Part No.	Dimensions in mm					
			l_2	l_{1s}	l_c	l_{3s}	dm_m	D_{5m}
12,00-12,49	100	**SD408-12.00/12.49-100-16R7**	168,2	120,2	48	108,2	16	20
12,50-12,99	104	**SD408-12.50/12.99-104-16R7**	173	125	48	112,5	16	20
13,00-13,99	112	**SD408-13.00/13.99-112-16R7**	181,9	133,9	48	120,9	16	20
14,00-14,99	120	**SD408-14.00/14.99-120-16R7**	191,5	143,5	48	129,5	16	20
15,00-15,99	128	**SD408-15.00/15.99-128-16R7**	201,2	153,2	48	138,2	16	20
16,00-16,99	136	**SD408-16.00/16.99-136-20R7**	212,9	162,9	50	146,9	20	24
17,00-17,99	144	**SD408-17.00/17.99-144-20R7**	222,6	172,6	50	155,6	20	24
18,00-18,99	152	**SD408-18.00/18.99-152-20R7**	232,3	182,3	50	164,3	20	24
19,00-19,99	160	**SD408-19.00/19.99-160-20R7**	242	192	50	173	20	24

Accessories

For drill dia (mm)	Key 	
12,00-12,99	SD400-K05	
13,00-14,99	SD400-K06	
15,00-16,99	SD400-K07	
17,00-18,99	SD400-K08	
19,00-19,99	SD400-K09	

* Accessories not included in delivery.

Drilling depth ~ 8 x D

SD408 -R1 shank



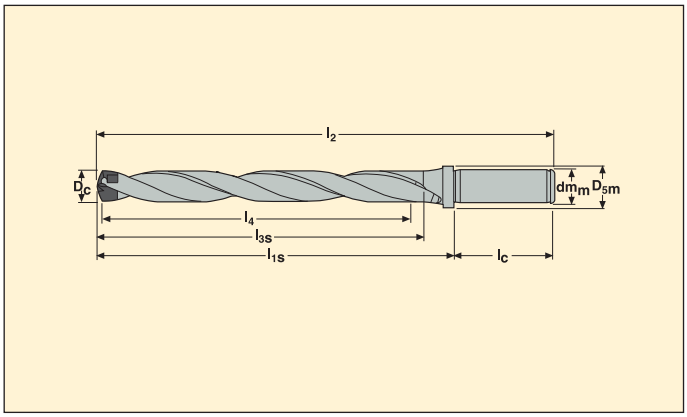

- Cylindrical shank (R1) fits holders: 5834 and 5672
- Internal coolant
- For cutting and machining data see page 172

D_c	l_4	Part No.	Dimensions in mm					
			l_2	l_{1s}	l_c	l_{3s}	dm_m	D_{5m}
12,00-12,49	100	**SD408-12.00/12.49-100-16R1**	168,2	120,2	48	108,2	16	20
12,50-12,99	104	**SD408-12.50/12.99-104-16R1**	173	125	48	112,5	16	20
13,00-13,99	112	**SD408-13.00/13.99-112-16R1**	181,9	133,9	48	120,9	16	20
14,00-14,99	120	**SD408-14.00/14.99-120-16R1**	191,5	143,5	48	129,5	16	20
15,00-15,99	128	**SD408-15.00/15.99-128-16R1**	201,2	153,2	48	138,2	16	20
16,00-16,99	136	**SD408-16.00/16.99-136-20R1**	212,9	162,9	50	146,9	20	24
17,00-17,99	144	**SD408-17.00/17.99-144-20R1**	222,6	172,6	50	155,6	20	24
18,00-18,99	152	**SD408-18.00/18.99-152-20R1**	232,3	182,3	50	164,3	20	24
19,00-19,99	160	**SD408-19.00/19.99-160-20R1**	242	192	50	173	20	24

Accessories

For drill dia (mm)	Key 	
12,00-12,99	SD400-K05	
13,00-14,99	SD400-K06	
15,00-16,99	SD400-K07	
17,00-18,99	SD400-K08	
19,00-19,99	SD400-K09	

* Accessories not included in delivery.

Crowns – Geometry -P, -M and -L



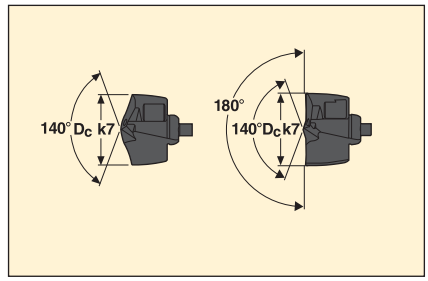

P-geometry for steel	M-geometry for stainless steels and high temp alloys	L-geometry for ductile long chipping materials	D_c (inch)	D_c (mm)	Reamer size*	Tap thread type	Forming tap
SD400-12.00-P	SD400-12.00-M	SD400-12.00-L	0.472	12,00	–	M14	–
SD400-12.10-P	-	-	0.476	12,10	–	–	–
SD400-12.20-P	-	-	0.480	12,20	–	–	–
SD400-12.30-P	SD400-12.30-M	SD400-12.30-L	0.484	12,30	–	–	–
SD400-12.41-P	SD400-12.41-M	SD400-12.41-L	0.489	12,41	–	–	–
SD400-12.50-P	SD400-12.50-M	SD400-12.50-L	0.492	12,50	–	MF14X1,5	–
SD400-12.60-P	-	-	0.496	12,60	–	–	–
SD400-12.70-P	SD400-12.70-M	SD400-12.70-L	0.500	12,70	–	–	–
SD400-12.80-P	SD400-12.80-M	SD400-12.80-L	0.504	12,80	13H6/13H7	MF14X1,25	–
SD400-12.90-P	SD400-12.90-M	SD400-12.90-L	0.508	12,90	13H6/13H7	–	–
SD400-13.00-P	SD400-13.00-M	SD400-13.00-L	0.512	13,00	–	MF14X1	–
SD400-13.10-P	SD400-13.10-M	SD400-13.10-L	0.516	13,10	–	–	M14
SD400-13.20-P	-	-	0.520	13,20	–	–	–
SD400-13.30-P	SD400-13.30-M	SD400-13.30-L	0.524	13,30	–	–	MF14X1.5
SD400-13.50-P	SD400-13.50-M	SD400-13.50-L	0.531	13,50	–	UNC5/8-11	–
SD400-13.70-P	SD400-13.70-M	SD400-13.70-L	0.539	13,70	–	–	–
SD400-13.80-P	SD400-13.80-M	SD400-13.80-L	0.543	13,80	14H6/14H7	–	–
SD400-13.89-P	SD400-13.89-M	SD400-13.89-L	0.547	13,89	14H6/14H7	–	–
SD400-14.00-P	SD400-14.00-M	SD400-14.00-L	0.551	14,00	–	M16	–
SD400-14.10-P	-	-	0.555	14,10	–	–	–
SD400-14.20-P	SD400-14.20-M	SD400-14.20-L	0.559	14,20	–	–	–
SD400-14.288-P	SD400-14.288-M	SD400-14.288-L	0.563	14,288	–	NPT3/8/NPTF3/8	–
SD400-14.40-P	-	-	0.567	14,40	–	–	–
SD400-14.50-P	SD400-14.50-M	SD400-14.50-L	0.571	14,50	–	MF16X1,5/UNF5/8-18	–
SD400-14.68-P	SD400-14.68-M	SD400-14.68-L	0.578	14,68	–	–	–
SD400-14.70-P	SD400-14.70-M	SD400-14.70-L	0.579	14,70	–	–	–
SD400-14.80-P	SD400-14.80-M	SD400-14.80-L	0.583	14,80	15H6/15H7	–	–
SD400-14.90-P	SD400-14.90-M	SD400-14.90-L	0.587	14,90	15H6/15H7	–	–
SD400-15.00-P	SD400-15.00-M	SD400-15.00-L	0.591	15,00	–	MF16X1.0	–
SD400-15.08-P	SD400-15.08-M	SD400-15.08-L	0.594	15,08	–	–	–
SD400-15.10-P	-	-	0.594	15,10	–	–	M16
SD400-15.20-P	-	-	0.598	15,20	–	–	–
SD400-15.25-P	SD400-15.25-M	SD400-15.25-L	0.600	15,25	–	G3/8	–
SD400-15.478-P	SD400-15.478-M	SD400-15.478-L	0.609	15,478	–	–	–
SD400-15.50-P	SD400-15.50-M	SD400-15.50-L	0.610	15,50	–	M18	–
SD400-15.70-P	SD400-15.70-M	SD400-15.70-L	0.618	15,70	–	–	–
SD400-15.80-P	SD400-15.80-M	SD400-15.80-L	0.622	15,80	16H6/16H7	–	–
SD400-15.875-P	SD400-15.875-M	SD400-15.875-L	0.625	15,875	16H6/16H7	–	–
SD400-16.00-P	SD400-16.00-M	SD400-16.00-L	0.630	16,00	–	–	–
SD400-16.10-P	-	-	0.634	16,10	–	–	–
SD400-16.20-P	-	-	0.638	16,20	–	–	–
SD400-16.25-P	-	-	0.640	16,25	–	–	–
SD400-16.27-P	SD400-16.27-M	SD400-16.27-L	0.641	16,27	–	–	–
SD400-16.40-P	-	-	0.646	16,40	–	–	–
SD400-16.50-P	SD400-16.50-M	SD400-16.50-L	0.650	16,50	–	MF18X1,5	–

* For futher information on what reamer to use see page 317.

Crowns – Geometry -P, -M and -L





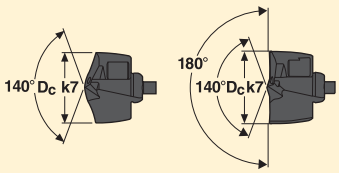

P-geometry for steel	M-geometry for stainless steels and high temp alloys	L-geometry for ductile long chipping materials	D_c (inch)	D_c (mm)	Reamer size*	Tap thread type	Forming tap
SD400-16.669-P	SD400-16.669-M	SD400-16.669-L	0.656	16,669	–	–	–
SD400-16.70-P	SD400-16.70-M	SD400-16.70-L	0.657	16,70	–	–	–
SD400-16.80-P	SD400-16.80-M	SD400-16.80-L	0.661	16,80	17H6/17H7	–	–
SD400-16.90-P	-	-	0.665	16,90	17H6/17H7	–	–
SD400-17.00-P	SD400-17.00-M	SD400-17.00-L	0.669	17,00	–	MF18X1	–
SD400-17.065-P	SD400-17.065-M	SD400-17.065-L	0.672	17,065	–	–	–
SD400-17.10-P	-	-	0.673	17,10	–	–	–
SD400-17.20-P	-	-	0.677	17,20	–	–	–
SD400-17.35-P	-	-	0.683	17,35	–	–	MF18X1.5
SD400-17.463-P	SD400-17.463-M	SD400-17.463-L	0.688	17,463	–	–	–
SD400-17.50-P	SD400-17.50-M	SD400-17.50-L	0.689	17,50	–	M20	–
SD400-17.70-P	SD400-17.70-M	SD400-17.70-L	0.697	17,70	–	–	–
SD400-17.80-P	SD400-17.80-M	SD400-17.80-L	0.701	17,80	18H6/18H7	–	–
SD400-17.859-P	SD400-17.859-M	SD400-17.859-L	0.703	17,859	18H6/18H7	–	–
SD400-17.90-P	SD400-17.90-M	SD400-17.90-L	0.705	17,90	18H6/18H7	NPT1/2	–
SD400-18.00-P	SD400-18.00-M	SD400-18.00-L	0.709	18,00	–	–	–
SD400-18.10-P	-	-	0.713	18,10	–	–	–
SD400-18.20-P	-	-	0.717	18,20	–	–	–
SD400-18.256-P	SD400-18.256-M	SD400-18.256-L	0.719	18,256	–	–	–
SD400-18.50-P	SD400-18.50-M	SD400-18.50-L	0.728	18,50	–	MF20X1,5	–
SD400-18.653-P	SD400-18.653-M	SD400-18.653-L	0.734	18,653	–	–	–
SD400-18.70-P	SD400-18.70-M	SD400-18.70-L	0.736	18,70	–	–	–
SD400-18.80-P	SD400-18.80-M	SD400-18.80-L	0.740	18,80	19H6/19H7	–	–
SD400-18.90-P	SD400-18.90-M	SD400-18.90-L	0.744	18,90	19H6/19H7	–	M20
SD400-19.00-P	SD400-19.00-M	SD400-19.00-L	0.748	19,00	–	G1/2/M20X1	–
SD400-19.05-P	SD400-19.05-M	SD400-19.05-L	0.750	19,05	–	–	–
SD400-19.10-P	-	-	0.752	19,10	–	–	–
SD400-19.20-P	SD400-19.20-M	SD400-19.20-L	0.756	19,20	–	–	–
SD400-19.25-P	SD400-19.25-M	SD400-19.25-L	0.758	19,25	–	BSW7/8-9 Tr24X5	–
SD400-19.447-P	SD400-19.447-M	SD400-19.447-L	0.766	19,447	–	–	–
SD400-19.50-P	SD400-19.50-M	SD400-19.50-L	0.768	19,50	–	M22	–
SD400-19.70-P	SD400-19.70-M	SD400-19.70-L	0.776	19,70	–	–	–
SD400-19.80-P	SD400-19.80-M	SD400-19.80-L	0.780	19,80	20H6/20H7	–	–
SD400-19.844-P	SD400-19.844-M	SD400-19.844-L	0.781	19,844	20H6/20H7	–	–
SD400-19.90-P	SD400-19.90-M	SD400-19.90-L	0.783	19,90	20H6/20H7	–	–

*For futher information on what reamer to use see page 317.

Cutting data – SD403 – Ø12-20

SMG		f					v_c
		Ø12,00	Ø14,00	Ø16,00	Ø18,00	Ø20,00	
P1	L	0,26	0,28	0,30	0,30	0,32	155
P2	L	0,26	0,28	0,30	0,32	0,32	150
P3	L	0,24	0,26	0,28	0,30	0,30	130
P4	P	0,28	0,30	0,32	0,34	0,34	115
P5	P	0,28	0,30	0,32	0,32	0,34	110
P6	P	0,28	0,30	0,30	0,32	0,34	120
P7	P	0,28	0,30	0,30	0,32	0,34	115
P8	P	0,28	0,30	0,32	0,34	0,36	110
P11	P	0,28	0,30	0,30	0,32	0,34	110
M1	M	0,17	0,19	0,20	0,22	0,22	95
M2	M	0,16	0,17	0,18	0,19	0,20	80
M3	M	0,13	0,14	0,14	0,15	0,16	60
M4	M	0,11	0,12	0,13	0,13	0,14	45
M5	M	0,11	0,12	0,13	0,13	0,14	37
K1	P	0,30	0,32	0,34	0,36	0,38	110
K2	P	0,28	0,30	0,32	0,32	0,34	95
K3	P	0,28	0,30	0,32	0,32	0,34	80
K4	P	0,28	0,30	0,32	0,32	0,34	75
K5	P	0,24	0,26	0,28	0,30	0,30	45
N2	M	0,22	0,24	0,26	0,26	0,28	215
N3	M	0,22	0,24	0,26	0,26	0,28	145
N11	M	0,22	0,24	0,26	0,26	0,28	170
S1	M	0,11	0,12	0,13	0,13	0,14	34
S2	M	0,11	0,12	0,13	0,13	0,14	24
S3	M	0,11	0,11	0,12	0,13	0,13	24
S11	M	0,13	0,14	0,14	0,15	0,16	65
S12	M	0,13	0,14	0,14	0,15	0,16	49
S13	M	0,11	0,12	0,13	0,13	0,14	38
H3	P	0,12	0,13	0,14	0,15	0,15	32
H5	P	0,19	0,20	0,22	0,22	0,24	60
H7	P	0,12	0,13	0,14	0,15	0,15	32
H8	P	0,14	0,15	0,16	0,17	0,18	60
H11	P	0,19	0,20	0,22	0,22	0,24	75
H12	P	0,19	0,20	0,22	0,22	0,24	120
H21	P	0,14	0,15	0,16	0,17	0,18	60

SMG = Seco material group
f = mm/rev
v_c= m/min
All cutting data are start values

Cutting data – SD405 – Ø12-20

SMG		f					v_c
		Ø12,00	Ø14,00	Ø16,00	Ø18,00	Ø20,00	
P1	L	0,26	0,28	0,30	0,30	0,32	135
P2	L	0,26	0,28	0,30	0,32	0,32	135
P3	L	0,24	0,26	0,28	0,30	0,30	115
P4	P	0,28	0,30	0,32	0,34	0,34	95
P5	P	0,28	0,30	0,32	0,32	0,34	90
P6	P	0,28	0,30	0,30	0,32	0,34	100
P7	P	0,28	0,30	0,30	0,32	0,34	95
P8	P	0,28	0,30	0,32	0,34	0,36	90
P11	P	0,28	0,30	0,30	0,32	0,34	90
M1	M	0,17	0,19	0,20	0,22	0,22	80
M2	M	0,16	0,17	0,18	0,19	0,20	65
M3	M	0,13	0,14	0,14	0,15	0,16	49
M4	M	0,11	0,12	0,13	0,13	0,14	37
M5	M	0,11	0,12	0,13	0,13	0,14	31
K1	P	0,30	0,32	0,34	0,36	0,38	90
K2	P	0,28	0,30	0,32	0,32	0,34	75
K3	P	0,28	0,30	0,32	0,32	0,34	65
K4	P	0,28	0,30	0,32	0,32	0,34	60
K5	P	0,24	0,26	0,28	0,30	0,30	37
N2	M	0,22	0,24	0,26	0,26	0,28	175
N3	M	0,22	0,24	0,26	0,26	0,28	120
N11	M	0,22	0,24	0,26	0,26	0,28	140
S1	M	0,11	0,12	0,13	0,13	0,14	28
S2	M	0,11	0,12	0,13	0,13	0,14	20
S3	M	0,11	0,11	0,12	0,13	0,13	20
S11	M	0,13	0,14	0,14	0,15	0,16	50
S12	M	0,13	0,14	0,14	0,15	0,16	40
S13	M	0,11	0,12	0,13	0,13	0,14	31
H3	P	0,12	0,13	0,14	0,15	0,15	26
H5	P	0,19	0,20	0,22	0,22	0,24	48
H7	P	0,12	0,13	0,14	0,15	0,15	26
H8	P	0,14	0,15	0,16	0,17	0,18	48
H11	P	0,19	0,20	0,22	0,22	0,24	60
H12	P	0,19	0,20	0,22	0,22	0,24	100
H21	P	0,14	0,15	0,16	0,17	0,18	48

SMG = Seco material group
f = mm/rev
v_c= m/min
All cutting data are start values

Cutting data – SD408 – Ø12-20

SMG		f					v_c
		Ø12,00	Ø14,00	Ø16,00	Ø18,00	Ø20,00	
P1	L	0,26	0,28	0,30	0,30	0,32	120
P2	L	0,26	0,28	0,30	0,32	0,32	120
P3	L	0,24	0,26	0,28	0,30	0,30	100
P4	P	0,28	0,30	0,32	0,34	0,34	75
P5	P	0,28	0,30	0,32	0,32	0,34	70
P6	P	0,28	0,30	0,30	0,32	0,34	80
P7	P	0,28	0,30	0,30	0,32	0,34	75
P8	P	0,28	0,30	0,32	0,34	0,36	70
P11	P	0,28	0,30	0,30	0,32	0,34	75
M1	M	0,17	0,19	0,20	0,22	0,22	65
M2	M	0,16	0,17	0,18	0,19	0,20	50
M3	M	0,13	0,14	0,14	0,15	0,16	39
M4	M	0,11	0,12	0,13	0,13	0,14	29
M5	M	0,11	0,12	0,13	0,13	0,14	24
K1	P	0,30	0,32	0,34	0,36	0,38	70
K2	P	0,28	0,30	0,32	0,32	0,34	60
K3	P	0,28	0,30	0,32	0,32	0,34	50
K4	P	0,28	0,30	0,32	0,32	0,34	49
K5	P	0,24	0,26	0,28	0,30	0,30	29
N2	M	0,22	0,24	0,26	0,26	0,28	140
N3	M	0,22	0,24	0,26	0,26	0,28	95
N11	M	0,22	0,24	0,26	0,26	0,28	110
S1	M	0,11	0,12	0,13	0,13	0,14	22
S2	M	0,11	0,12	0,13	0,13	0,14	16
S3	M	0,11	0,11	0,12	0,13	0,13	16
S11	M	0,13	0,14	0,14	0,15	0,16	42
S12	M	0,13	0,14	0,14	0,15	0,16	32
S13	M	0,11	0,12	0,13	0,13	0,14	25
H3	P	0,12	0,13	0,14	0,15	0,15	21
H5	P	0,19	0,20	0,22	0,22	0,24	39
H7	P	0,12	0,13	0,14	0,15	0,15	21
H8	P	0,14	0,15	0,16	0,17	0,18	39
H11	P	0,19	0,20	0,22	0,22	0,24	49
H12	P	0,19	0,20	0,22	0,22	0,24	80
H21	P	0,14	0,15	0,16	0,17	0,18	39

SMG = Seco material group
f = mm/rev
v_c= m/min
All cutting data are start values

Application information

Machined surface

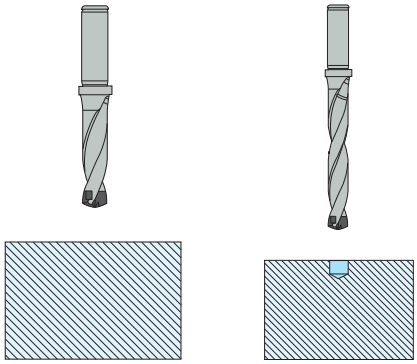

No pre-drilling or entrance feed needed when using SD403 and SD405. When using a SD408 drill body pre-drilling is always recommended. (When using SD405 in stainless steel a pre-drilling operation might be needed).

Stacked material

It is possible to drill stacked material as long as the pieces are securely clamped together, so that there are no air gaps between the parts.
Air gaps can affect chip evacuation, and thereby damage the drill.

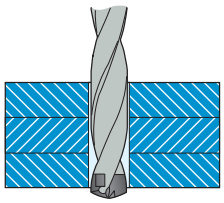

Irregular/Angled hole entrance

Pre-drilling operation alternatives

If irregular or angle entrance use pre operations accordingly.

When using drills >3 x D pre-drilling with a standard tool e.g. SD403 is recommended





Machine a flat using an end mill from the Seco range.

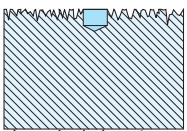

Irregular hole entrance

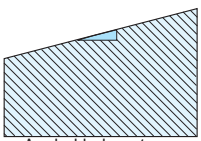

Angled hole entrance

Coolant recommendations

Coolant pressure
Minimum recommended coolant pressure 10 bar with ≤3 x D
Minimum recommended coolant pressure 30 bar with > 3 x D

Coolant mix
Recommended emulsion mix 6-8%. When drilling in stainless steels, superalloys and high strength steels a mix of 10% is recommended

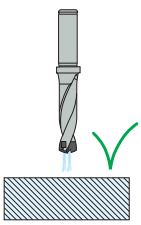

First choice

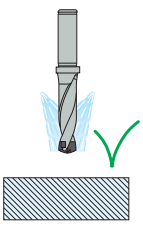

< 3 x D

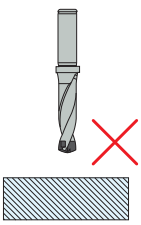

Machining data

The values in the graphs vary with e.g. cutting data, material, efficiency of the machine and tool wear.
The graphs below are valid for Seco Material Group (SMG) P5-P6 and cutting speed 90 m/min.

Net power consumption

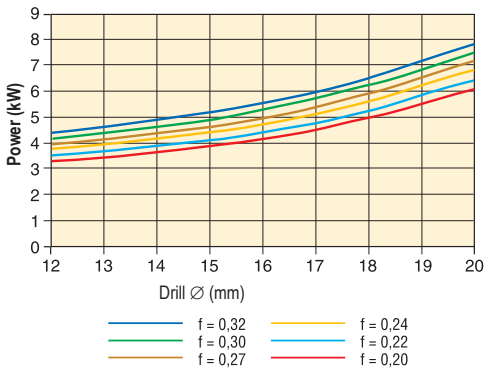

Drilling torque

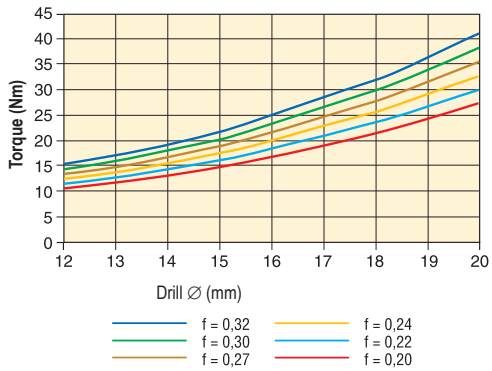

Feed force

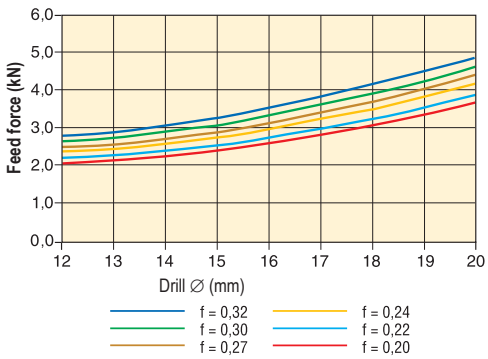

Coolant flow at different pressures

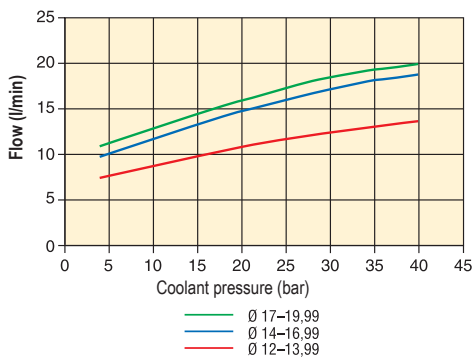

Hole tolerances/Surface finish

SD403, SD405 and SD408 IT9-10 / R_a 1-4*		
Drill ∅ D_c (mm)	IT9 tolerance (µm)	IT10 tolerance (µm)
10-18	43	70
18-30	52	84

*Deterioration of surface finish and hole tolerance can occur when drilling in low carbon steel or stainless steel.
Use the shortest drill possible for best hole quality.

Recommended coolant flow Dx1 l/min
Minimum coolant flow D/2 l/min
D = Drill diameter
Minimum recommended coolant pressure 10 bar with ≤ 3 x D
Minimum recommended coolant pressure 20 bar with ≤ 5 x D
Minimum recommended coolant pressure 40 bar with > 5 x D

Coolant mix

Recommended emulsion mix is 6–8%.
When drilling in stainless steels, superalloys and high strength steels a mix of 10% is recommended.

Troubleshooting

- Fixturing stability
- Machine spindle condition
- Tool holder condition
- Clamping of tool:
  - Run-out within 0.06 TIR
- Chip evacuation:
- Cutting data
- Coolant:
  - Pressure
  - Flow
  - Concentration

Cutting edges get chipped

- Reduce the feed/rev
- If the drill vibrates, reduce the cutting speed and increase the feed rate
- When drilling through rough or hard surfaces, reduce the feed rate by 30%-50% during entrance and exit



Unsatisfactory diameter tolerance

- Increase the feed/rev.
- Use a Seco Feedmax solid carbide drill, see pages 16-19
- Use a reaming operation, see page 317
- Use a boring operation, see page 481-482

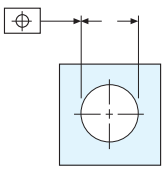

Too fast flank wear

- Check that the correct geometry is used
- Reduce the cutting speed

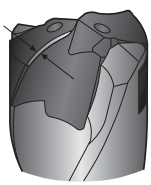

Unsatisfactory surface finish

- Reduce the feed/rev.
- Increase the cutting speed.
- Check that the correct geometry is used.
- Use a Seco Feedmax solid carbide drill, see pages 16-19
- Use a reaming operation, see page 317

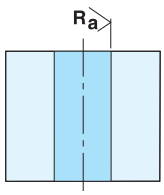

Groove wear

- Reduce the feed/rev
- Reduce the cutting speed
- Increase the coolant concentration

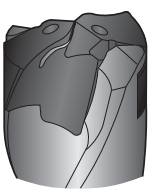

Unsatisfactory positioning of the hole

- Reduce the feed/rev
- If drilling through rough, hard and angled surfaces - reduce the feed by 30%–50% during entrance and exit
- Pre drill with a 140° point angle
- Use a Seco Feedmax solid carbide drill see Feedmax pages 16-19
- Use a boring operation, see pages 481-482

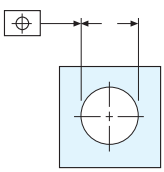

Wear of peripheral land margins

- Check that the correct geometry is used
- Reduce the cutting speed
- Increase the coolant concentration
- When drilling through rough or hard surfaces, reduce the feed rate by 30%–50% during entrance and exit

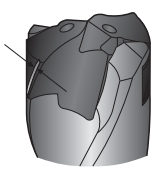

Chip jamming due to long chips

- Increase the feed
- In long chipping materials SMG P1-P4, SMG M1-M2:
  - Increase cutting speed and reduce feed/rev
  - Use the -L geometry

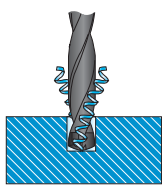

Indexable insert drill



Range overview

Perfomax®	∅ Range	Drill depth	Drill tolerance	Hole tolerance
SD502  **Pages 183-185**	15-59	~ 2 x D	IT +/- 0,1	+0/+0,2
SD503  **Pages 186-191**	15-59	~ 3 x D	IT +/- 0,1	+0/+0,3
SD504  **Pages 192-197**	17-59	~ 4 x D	IT +/- 0,1	+0/+0,4
SD505  **Pages 198-199**	19-45	~ 5 x D	IT +/- 0,1	+0/+0,5
SD542  **Pages 200**	60-85	~ 2,5 x D	IT +/- 0,1	+0/+0,3

Range overview

Perfomax®	∅ Range	Drill depth	Drill tolerance	Hole tolerance
SD572  **Pages 201-202**	15-47	2 x D	IT +/- 0,1	+0/+0,2
SD602  **Pages 206-207**	60-160	1 – 10 x D	IT +/- 0,2	-

Code key - Indexable insert drill

Type of drill:
SD502: 2 x D
SD503: 3 x D
SD504: 4 x D
SD505: 5 x D
SD542: 2,5 x D
SD572: 2 x D

Shank diameter

Type of shank:
2. ABS-compatible
7. ISO 9766
8. VDI-compatible
G. Graflex

SD503 - 20 - 60 - 25 R 7

Drill diameter

Drilling depth

Right-hand rotation

Drill diameter

Drilling depth

SD503 - 20 - 60 - C5

Type of drill:
SD503: 3 x D
SD504: 4 x D

Connection for Seco-Capto C4, C5, C6



Shanks

ISO 9766

Universal choice fits into most holders on the market such as:
- Weldon 1835B
- ISO 5414
- DIN 69880

Coolant inlet at the back end of the drill.

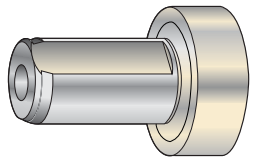

-7

Shank with two flats

Centre insert
cutting edge
above workpiece
centre line

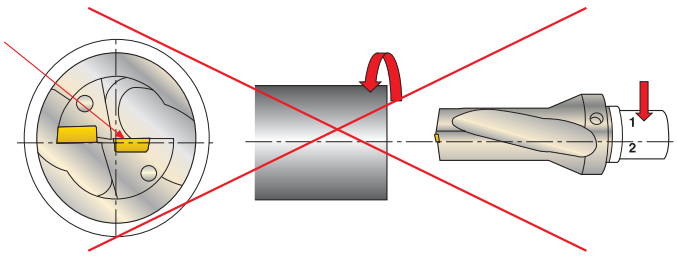

For non rotating applications:

An additional flat is added to the shank for increased flexibility in lathe applications. In such applications the workpiece centre line and the drill centre line must align. If they don't the centre insert could be located above the workpiece centre line resulting in poor performance of the drill.

Centre insert
cutting edge
below workpiece
centre line

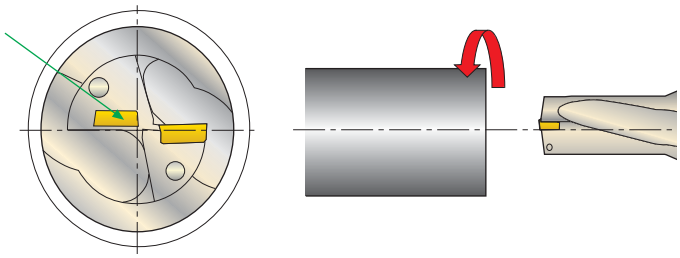

By turning the drill 180 degrees the second flat gives the possibility to compensate for this misalignment in a fast and simple way.

NOTE! If a drill with -7 shank is used in a rotating application together with our adjustable holder, the flat located on the same side as the centre insert must be used.
Otherwise the drill diameter will be positioned in the wrong way.

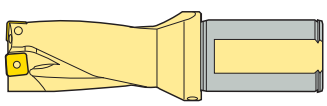

Shanks

Seco-Capto

- Flexible - Same tool holder can easily be used in different machines
- Modular - Possibility to build tools with extension adapters
- High torque transmission - Torque load is spread symmetrically
- High rigidity - Tight press fit guarantees that there is no play in the coupling
- Accurate - Tapered polygon coupling produces a strong, self centering joint within 2 microns

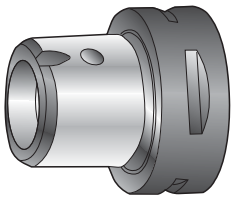

-C
(4, 5, 6)

Graflex

- Fits directly into Graflex holders and locked with two ball headed locking screws placed 120°. Apart
- Short overhang - rigidity and productivity
- Cylinder/face connection - great accuracy
- Coolant inlet at the back end of the drill

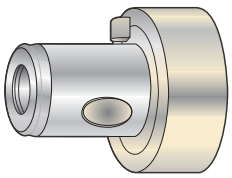

-G

ABS 50

- An ABS 50 Compatible shank
- Fits directly into ABS 50 holder with one locking screw
- Coolant inlet at the back end of the drill

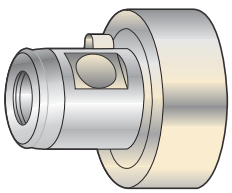

-2

VDI30 and VDI 40

- VDI compatible shank
- Fits directly into holders for
  – VDI 3425 bl.2
  – DIN 69880

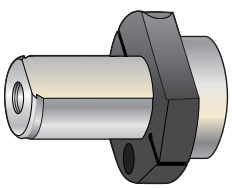

-8

NOTE! The coolant ring must ordered separately

Shanks

Available in:

VDI 30		
Drill depth	Drill diameter	 Accessories Coolant ring
2 x D	15-31	SDA5-30R8
3 x D	15-31	SDA5-30R8
4 x D	17-31	SDA5-30R8
5 x D	19-31	SDA5-30R8

VDI 40				
Drill depth	Drill diameter	 Blanking screw	 Accessories Coolant ring	 Plug
2 x D	15-40		SDA5-40R8	
3 x D	15-40		SDA5-40R8	
4 x D	17-31		SDA5-40R8	
5 x D	19-31		SDA5-40R8	
2 x D	41-59	R1/4”	SDA5-40R8	P6SS8x8
3 x D	41-59	R1/4”	SDA5-40R8	P6SS8x8

1. Fit the ring around the drill but do not tighten the locking screw

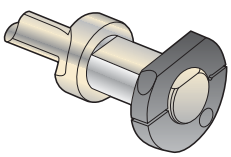

2. Lock the drill in the collet

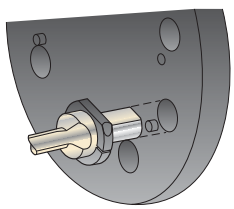

3. Tighten the locking screw in the coolant ring

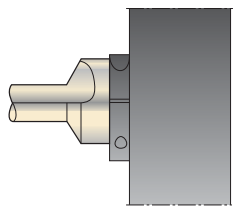

Coolant ring

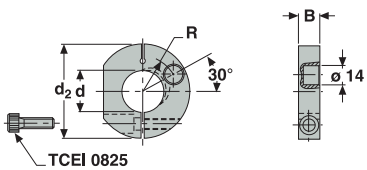

Drilling depth 2 x D

ISO 9766 shank, -7



- For insert information see pages 215-217
- For cutting and machining data see pages 218-219
- Internal coolant
- Spare parts and accessories see page 203

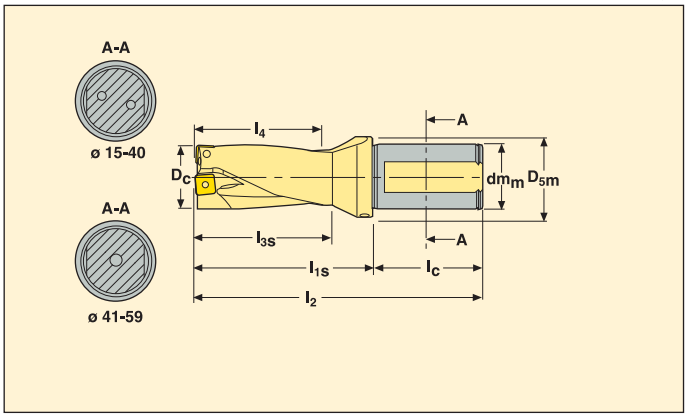

D_c	l_4	Part No.	Dimensions in mm						Insert		Radial adjustment	
			l_2	l_{1s}	l_c	l_{3s}	dm_m	D_{5m}	Centre insert	Periph insert	-	+
15	30	SD502-15-30-25R7	116	60	56	35	25	35	SPGX0502-C1	SCGX050204..	0,25	0,35
15,5	31	SD502-15.5-31-20R7	111	61	50	36	20	30	SPGX0502-C1	SCGX050204..	0,3	0,35
15,5	31	SD502-15.5-31-25R7	117	61	56	36	25	35	SPGX0502-C1	SCGX050204..	0,3	0,35
16	32	SD502-16-32-20R7	112	62	50	37	20	30	SPGX0502-C1	SCGX050204..	0,15	0,45
16	32	SD502-16-32-25R7	118	62	56	37	25	35	SPGX0502-C1	SCGX050204..	0,15	0,45
16,5	33	SD502-16.5-33-20R7	113	63	50	38	20	30	SPGX0502-C1	SCGX050204..	0,15	0,4
16,5	33	SD502-16.5-33-25R7	119	63	56	38	25	35	SPGX0502-C1	SCGX050204..	0,15	0,4
17	34	SD502-17-34-20R7	114	64	50	39	20	30	SPGX0502-C1	SCGX050204..	0,1	0,5
17	34	SD502-17-34-25R7	120	64	56	39	25	35	SPGX0502-C1	SCGX050204..	0,1	0,5
17,5	35	SD502-17.5-35-20R7	115	65	50	40	20	30	SPGX0602-C1	SCGX050204..	0,5	0,5
17,5	35	SD502-17.5-35-25R7	121	65	56	40	25	35	SPGX0602-C1	SCGX050204..	0,5	0,5
18	36	SD502-18-36-20R7	116	66	50	41	20	30	SPGX0602-C1	SCGX050204..	0,35	0,25
18	36	SD502-18-36-25R7	122	66	56	41	25	35	SPGX0602-C1	SCGX050204..	0,35	0,25
18,5	37	SD502-18.5-37-20R7	117	67	50	42	20	30	SPGX0602-C1	SCGX050204..	0,35	0,25
18,5	37	SD502-18.5-37-25R7	123	67	56	42	25	35	SPGX0602-C1	SCGX050204..	0,35	0,25
19	38	SD502-19-38-20R7	118	68	50	43	20	30	SPGX0602-C1	SCGX050204..	0,15	0,45
19	38	SD502-19-38-25R7-SC05	124	68	56	43	25	35	SPGX0602-C1	SCGX050204..	0,15	0,45
19,5	39	SD502-19.5-39-20R7	119	69	50	44	20	30	SPGX0602-C1	SCGX060204..	0,25	0,40
20	40	SD502-20-40-25R7	126	70	56	45	25	35	SPGX0602-C1	SCGX060204..	0,1	0,45
21	42	SD502-21-42-25R7	128	72	56	47	25	35	SPGX0602-C1	SCGX060204..	0,1	0,5
22	44	SD502-22-44-25R7	130	74	56	49	25	35	SPGX0703-C1	SCGX060204..	0,45	0,5
23	46	SD502-23-46-25R7	132	76	56	51	25	35	SPGX0703-C1	SCGX070308..	0,35	0,5
24	48	SD502-24-48-25R7	134	78	56	53	25	35	SPGX0703-C1	SCGX070308..	0,15	0,5
25	50	SD502-25-50-32R7	140	80	60	55	32	42	SPGX0703-C1	SCGX070308..	0,15	0,5
26	52	SD502-26-52-32R7-SP09	142	82	60	57	32	42	SPGX0903-C1	SCGX070308..	0,5	0,15
27	54	SD502-27-54-32R7	144	84	60	59	32	42	SPGX0903-C1	SCGX070308..	0,5	0,3
28	56	SD502-28-56-32R7-SC07	146	86	60	61	32	42	SPGX0903-C1	SCGX070308..	0,3	0,5
29	58	SD502-29-58-32R7	148	88	60	63	32	42	SPGX0903-C1	SCGX09T308..	0,2	0,5
30	60	SD502-30-60-32R7	150	90	60	65	32	42	SPGX0903-C1	SCGX09T308..	0,15	0,5
31	62	SD502-31-62-32R7	152	92	60	67	32	42	SPGX0903-C1	SCGX09T308..	0,15	0,5
32	64	SD502-32-64-32R7-SP11	154	94	60	69	32	50	SPGX11T3-C1	SCGX09T308..	0,5	0,35
32	64	SD502-32-64-40R7-SP11	162	94	68	69	40	50	SPGX11T3-C1	SCGX09T308..	0,5	0,35
33	66	SD502-33-66-32R7	156	96	60	71	32	50	SPGX11T3-C1	SCGX09T308..	0,5	0,5
33	66	SD502-33-66-40R7	164	96	68	71	40	50	SPGX11T3-C1	SCGX09T308..	0,5	0,5
34	68	SD502-34-68-32R7	158	98	60	73	32	50	SPGX11T3-C1	SCGX09T308..	0,25	0,5
34	68	SD502-34-68-40R7	166	98	68	73	40	50	SPGX11T3-C1	SCGX09T308..	0,25	0,5
35	70	SD502-35-70-32R7	160	100	60	75	32	50	SPGX11T3-C1	SCGX120408..	0,25	0,25
35	70	SD502-35-70-40R7	168	100	68	75	40	50	SPGX11T3-C1	SCGX120408..	0,25	0,5
36	72	SD502-36-72-32R7	162	102	60	77	32	50	SPGX11T3-C1	SCGX120408..	0,1	0,5
36	72	SD502-36-72-40R7	170	102	68	77	40	50	SPGX11T3-C1	SCGX120408..	0,1	0,5
37	74	SD502-37-74-32R7	164	104	60	79	32	50	SPGX11T3-C1	SCGX120408..	0,1	0,5

Drilling depth 2 x D

ISO 9766 shank, -7

D_c	l_4	Part No.	Dimensions in mm						Insert		Radial adjustment	
			l_2	l_{1s}	l_c	l_{3s}	dm_m	D_{5m}	Centre insert	Periph insert	-	+
37	74	SD502-37-74-40R7	172	104	68	79	40	50	SPGX11T3-C1	SCGX120408..	0,1	0,5
38	76	SD502-38-76-32R7-SP12	166	106	60	81	32	50	SPGX12T3-C1	SCGX120408..	0,5	0,5
38	76	SD502-38-76-40R7-SP12	174	106	68	81	40	50	SPGX12T3-C1	SCGX120408..	0,5	0,5
39	78	SD502-39-78-32R7	168	108	60	83	32	50	SPGX12T3-C1	SCGX120408..	0,4	0,5
39	78	SD502-39-78-40R7	176	108	68	83	40	50	SPGX12T3-C1	SCGX120408..	0,4	0,5
40	80	SD502-40-80-32R7	170	110	60	84	32	50	SPGX12T3-C1	SCGX120408..	0,2	0,5
41	82	SD502-41-82-40R7	180	112	68	87	40	50	SPGX12T3-C1	SCGX120408..	0,2	0,5
42	84	SD502-42-84-40R7	182	114	68	89	40	50	SPGX12T3-C1	SCGX120408..	0,15	0,5
43	86	SD502-43-86-40R7	184	116	68	91	40	50	SPGX12T3-C1	SCGX120408..	0,1	0,5
44	88	SD502-44-88-40R7	186	118	68	93	40	50	SPGX1504-C1	SCGX120408..	0,5	0,5
45	90	SD502-45-90-40R7	188	120	68	95	40	59	SPGX1504-C1	SCGX150512..	0,5	0,5
46	92	SD502-46-92-40R7	190	122	68	97	40	59	SPGX1504-C1	SCGX150512..	0,5	0,5
47	94	SD502-47-94-40R7	192	124	68	99	40	59	SPGX1504-C1	SCGX150512..	0,5	0,5
48	96	SD502-48-96-40R7	194	126	68	101	40	59	SPGX1504-C1	SCGX150512..	0,5	0,5
49	98	SD502-49-98-40R7	196	128	68	103	40	59	SPGX1504-C1	SCGX150512..	0,3	0,5
50	100	SD502-50-100-40R7	198	130	68	105	40	59	SPGX1504-C1	SCGX150512..	0,15	0,5
51	102	SD502-51-102-40R7	200	132	68	107	40	59	SPGX1504-C1	SCGX150512..	0,15	0,5
52	104	SD502-52-104-40R7	202	134	68	109	40	59	SPGX1904-C1	SCGX150512..	0,5	0,5
53	106	SD502-53-106-40R7	204	136	68	111	40	59	SPGX1904-C1	SCGX150512..	0,5	0,5
54	108	SD502-54-108-40R7	206	138	68	113	40	59	SPGX1904-C1	SCGX150512..	0,5	0,5
55	110	SD502-55-110-40R7	208	140	68	115	40	59	SPGX1904-C1	SCGX150512..	0,5	0,5
56	112	SD502-56-112-40R7	210	142	68	117	40	59	SPGX1904-C1	SCGX150512..	0,5	0,5
57	114	SD502-57-114-40R7	212	144	68	119	40	59	SPGX1904-C1	SCGX150512..	0,35	0,5
58	116	SD502-58-116-40R7	214	146	68	121	40	59	SPGX1904-C1	SCGX150512..	0,15	0,5
59	118	SD502-59-118-40R7	216	148	68	123	40	59	SPGX1904-C1	SCGX150512..	0,15	0,5

Drilling depth 2 x D

ABS 50 compatible shank, -2



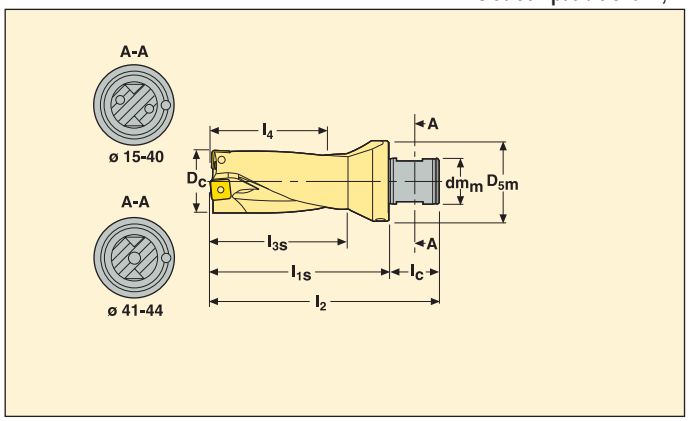

- For insert information see pages 215-217
- For cutting and machining data see pages 218-219
- Internal coolant
- Spare parts and accessories see page 203

D_c	l_4	Part No.	Dimensions in mm						Insert		Radial adjustment	
			l_2	l_{1s}	l_c	l_{3s}	dm_m	D_{5m}	Centre insert	Periph insert	-	+
15	30	SD502-15-30-50R2	91	60	31	35	28	50	SPGX0502-C1	SCGX050204..	0,25	0,35
15,5	31	SD502-15.5-31-50R2	92	61	31	36	28	50	SPGX0502-C1	SCGX050204..	0,3	0,35
16	32	SD502-16-32-50R2	93	62	31	37	28	50	SPGX0502-C1	SCGX050204..	0,15	0,45
16,5	33	SD502-16.5-33-50R2	94	63	31	38	28	50	SPGX0502-C1	SCGX050204..	0,15	0,4
17	34	SD502-17-34-50R2	95	64	31	39	28	50	SPGX0502-C1	SCGX050204..	0,1	0,5
17,5	35	SD502-17.5-35-50R2	96	65	31	40	28	50	SPGX0602-C1	SCGX050204..	0,5	0,5
18	36	SD502-18-36-50R2	97	66	31	41	28	50	SPGX0602-C1	SCGX050204..	0,35	0,25
18,5	37	SD502-18.5-37-50R2	98	67	31	42	28	50	SPGX0602-C1	SCGX050204..	0,35	0,25
19	38	SD502-19-38-50R2-SC05	99	68	31	43	28	50	SPGX0602-C1	SCGX050204..	0,15	0,45
20	40	SD502-20-40-50R2	101	70	31	45	28	50	SPGX0602-C1	SCGX060204..	0,1	0,45
20,62	42	SD502-20.62-42-50R2	103	72	31	47	28	50	SPGX0602-C1	SCGX060204..	0,1	0,5
21	42	SD502-21-42-50R2	103	72	31	47	28	50	SPGX0602-C1	SCGX060204..	0,1	0,5
22	44	SD502-22-44-50R2	105	74	31	49	28	50	SPGX0703-C1	SCGX060204..	0,45	0,5
22,23	45	SD502-22.23-45-50R2	106	75	31	50	28	50	SPGX0703-C1	SCGX060204..	0,45	0,5
23	46	SD502-23-46-50R2	107	76	31	51	28	50	SPGX0703-C1	SCGX070308..	0,35	0,5
24	48	SD502-24-48-50R2	109	78	31	53	28	50	SPGX0703-C1	SCGX070308..	0,15	0,5
25	50	SD502-25-50-50R2	111	80	31	55	28	50	SPGX0703-C1	SCGX070308..	0,15	0,5
25,40	51	SD502-25.40-51-50R2	112	81	31	56	28	50	SPGX0703-C1	SCGX070308..	0,15	0,5
26	52	SD502-26-52-50R2-SP09	113	82	31	57	28	50	SPGX0903-C1	SCGX070308..	0,5	0,15
27	54	SD502-27-54-50R2	115	84	31	59	28	50	SPGX0903-C1	SCGX070308..	0,5	0,3
28	56	SD502-28-56-50R2-SC07	117	86	31	61	28	50	SPGX0903-C1	SCGX070308..	0,3	0,5
28,59	58	SD502-28.59-58-50R2	119	88	31	63	28	50	SPGX0903-C1	SCGX09T308..	0,2	0,5
29	58	SD502-29-58-50R2	119	88	31	63	28	50	SPGX0903-C1	SCGX09T308..	0,2	0,5
30	60	SD502-30-60-50R2	121	90	31	65	28	50	SPGX0903-C1	SCGX09T308..	0,15	0,5
31	62	SD502-31-62-50R2	123	92	31	67	28	50	SPGX0903-C1	SCGX09T308..	0,15	0,5
31,75	64	SD502-31.75-64-50R2-SP11	125	94	31	69	28	50	SPGX11T3-C1	SCGX09T308..	0,5	0,35
32	64	SD502-32-64-50R2-SP11	125	94	31	69	28	50	SPGX11T3-C1	SCGX09T308..	0,5	0,35
33	66	SD502-33-66-50R2	127	96	31	71	28	50	SPGX11T3-C1	SCGX09T308..	0,5	0,5
34	68	SD502-34-68-50R2	129	98	31	73	28	50	SPGX11T3-C1	SCGX09T308..	0,25	0,5
35	70	SD502-35-70-50R2	131	100	31	75	28	50	SPGX11T3-C1	SCGX120408..	0,25	0,5
36	72	SD502-36-72-50R2	133	102	31	77	28	50	SPGX11T3-C1	SCGX120408..	0,1	0,5
37	74	SD502-37-74-50R2	135	104	31	79	28	50	SPGX11T3-C1	SCGX120408..	0,1	0,5
38	76	SD502-38-76-50R2-SP12	137	106	31	81	28	50	SPGX12T3-C1	SCGX120408..	0,5	0,5
39	78	SD502-39-78-50R2	139	108	31	83	28	50	SPGX12T3-C1	SCGX120408..	0,4	0,5
40	80	SD502-40-80-50R2	141	110	31	85	28	50	SPGX12T3-C1	SCGX120408..	0,2	0,5
41	82	SD502-41-82-50R2	143	112	31	87	28	50	SPGX12T3-C1	SCGX120408..	0,2	0,5
42	84	SD502-42-84-50R2	145	114	31	89	28	50	SPGX12T3-C1	SCGX120408..	0,15	0,5
43	86	SD502-43-86-50R2	147	116	31	91	28	50	SPGX12T3-C1	SCGX120408..	0,1	0,5
44	88	SD502-44-88-50R2	149	118	31	93	28	50	SPGX1504-C1	SCGX120408..	0,5	0,5
44,45	88	SD502-44.45-89-50R2	150	119	31	94	28	50	SPGX1504-C1	SCGX120408..	0,5	0,5

Drilling depth 3 x D

ISO 9766 shank, -7



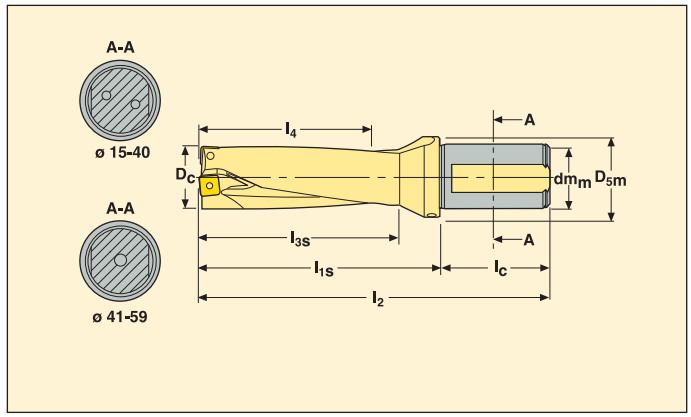

- For insert information see pages 215-217
- For cutting and machining data see pages 220-221
- Internal coolant
- Spare parts and accessories see page 203

			Dimensions in mm						Insert		Radial adjustment	
D_c	l_4	Part No.	l_2	l_{1s}	l_c	l_{3s}	dm_m	D_{5m}	Centre insert	Periph insert	-	+
15	45	SD503-15-45-20R7	125	75	50	50	20	30	SPGX 0502-C1	SCGX 050204..	0,25	0,35
15	45	SD503-15-45-25R7	131	75	56	50	25	35	SPGX 0502-C1	SCGX 050204..	0,25	0,35
15,5	47	SD503-15.5-47-20R7	127	77	50	52	20	30	SPGX 0502-C1	SCGX 050204..	0,3	0,35
15,5	47	SD503-15.5-47-25R7	133	77	56	52	25	35	SPGX 0502-C1	SCGX 050204..	0,3	0,35
16	48	SD503-16-48-20R7	128	78	50	53	20	30	SPGX 0502-C1	SCGX 050204..	0,15	0,45
16	48	SD503-16-48-25R7	134	78	56	53	25	35	SPGX 0502-C1	SCGX 050204..	0,15	0,45
16,5	50	SD503-16.5-50-20R7	130	80	50	55	20	30	SPGX 0502-C1	SCGX 050204..	0,15	0,4
16,5	50	SD503-16.5-50-25R7	136	80	56	55	25	35	SPGX 0502-C1	SCGX 050204..	0,15	0,4
17	51	SD503-17-51-20R7	131	81	50	56	20	30	SPGX 0502-C1	SCGX 050204..	0,1	0,5
17	51	SD503-17-51-25R7	137	81	56	56	25	35	SPGX 0502-C1	SCGX 050204..	0,1	0,5
17,5	53	SD503-17.5-53-20R7	133	83	50	58	20	30	SPGX 0602-C1	SCGX 050204..	0,5	0,5
17,5	53	SD503-17.5-53-25R7	139	83	56	58	25	35	SPGX 0602-C1	SCGX 050204..	0,5	0,5
18	54	SD503-18-54-20R7	134	84	50	59	20	30	SPGX 0602-C1	SCGX 050204..	0,35	0,25
18	54	SD503-18-54-25R7	140	84	56	59	25	35	SPGX 0602-C1	SCGX 050204..	0,35	0,25
18,5	56	SD503-18.5-56-20R7	136	86	50	61	20	30	SPGX 0602-C1	SCGX 050204..	0,35	0,25
18,5	56	SD503-18.5-56-25R7	142	86	56	61	25	35	SPGX 0602-C1	SCGX 050204..	0,35	0,25
19	57	SD503-19-57-20R7	137	87	50	62	20	30	SPGX 0602-C1	SCGX 050204..	0,15	0,45
19	57	SD503-19-57-25R7-SC05	143	87	56	62	25	35	SPGX 0602-C1	SCGX 050204..	0,15	0,45
19,5	59	SD503-19.5-59-20R7	139	89	50	64	20	30	SPGX 0602-C1	SCGX 060204..	0,25	0,4
19,5	59	SD503-19.5-59-25R7	145	89	56	64	25	35	SPGX 0602-C1	SCGX 060204..	0,25	0,4
20	60	SD503-20-60-25R7	146	90	56	65	25	35	SPGX 0602-C1	SCGX 060204..	0,1	0,45
20,5	62	SD503-20.5-62-25R7	148	92	56	67	25	35	SPGX 0602-C1	SCGX 060204..	0,1	0,5
21	63	SD503-21-63-25R7	149	93	56	68	25	35	SPGX 0602-C1	SCGX 060204..	0,1	0,5
21,5	65	SD503-21.5-65-25R7	151	95	56	70	25	35	SPGX 0703-C1	SCGX 060204..	0,35	0,5
22	66	SD503-22-66-25R7	152	96	56	71	25	35	SPGX 0703-C1	SCGX 060204..	0,45	0,5
22,5	68	SD503-22.5-68-25R7	154	98	56	73	25	35	SPGX 0703-C1	SCGX 070308..	0,35	0,5
23	69	SD503-23-69-25R7	155	99	56	74	25	35	SPGX 0703-C1	SCGX 070308..	0,35	0,5
23,5	71	SD503-23.5-71-25R7	157	101	56	76	25	35	SPGX 0703-C1	SCGX 070308..	0,1	0,5
24	72	SD503-24-72-25R7	158	102	56	77	25	35	SPGX 0703-C1	SCGX 070308..	0,15	0,5
24,5	74	SD503-24.5-74-25R7	160	104	56	79	25	35	SPGX 0703-C1	SCGX 070308..	0,1	0,5
25	75	SD503-25-75-32R7	165	105	60	80	32	42	SPGX 0703-C1	SCGX 070308..	0,15	0,5
25,5	77	SD503-25.5-77-32R7-SP09	167	107	60	82	32	42	SPGX 0903-C1	SCGX 070308..	0,5	0,1
26	78	SD503-26-78-32R7-SP09	168	108	60	83	32	42	SPGX 0903-C1	SCGX 070308..	0,5	0,15
26,5	80	SD503-26.5-80-32R7	170	110	60	85	32	42	SPGX 0903-C1	SCGX 070308..	0,5	0,1
27	81	SD503-27-81-32R7	171	111	60	86	32	42	SPGX 0903-C1	SCGX 070308..	0,5	0,3
27,5	83	SD503-27.5-83-32R7-SC07	173	113	60	88	32	42	SPGX 0903-C1	SCGX 070308..	0,4	0,4
28	84	SD503-28-84-32R7-SC07	174	114	60	89	32	42	SPGX 0903-C1	SCGX 070308..	0,3	0,5
28,5	86	SD503-28.5-86-32R7	176	116	60	91	32	42	SPGX 0903-C1	SCGX 09T308..	0,5	0,4
29	87	SD503-29-87-32R7	177	117	60	92	32	42	SPGX 0903-C1	SCGX 09T308..	0,2	0,5
29,5	89	SD503-29.5-89-32R7	179	119	60	94	32	42	SPGX 0903-C1	SCGX 09T308..	0,45	0,5
30	90	SD503-30-90-32R7	180	120	60	95	32	42	SPGX 0903-C1	SCGX 09T308..	0,15	0,5

Drilling depth 3 x D

ISO 9766 shank, -7

D_c	l_4	Part No.	Dimensions in mm						Insert		Radial adjustment	
			l_2	l_{1s}	l_c	l_{3s}	dm_m	D_{5m}	Centre insert	Periph insert	-	+
30,5	92	SD503-30.5-92-32R7	182	122	60	97	32	42	SPGX 0903-C1	SCGX 09T308..	0,25	0,5
31	93	SD503-31-93-32R7	183	123	60	98	32	42	SPGX 0903-C1	SCGX 09T308..	0,15	0,5
31,5	95	SD503-31.5-95-32R7-SP11	185	125	60	100	32	42	SPGX 11T3-C1	SCGX 09T308..	0,5	0,2
32	96	SD503-32-96-32R7-SP11	186	126	60	101	32	50	SPGX 11T3-C1	SCGX 09T308..	0,5	0,3
32	96	SD503-32-96-40R7-SP11	194	126	68	101	40	50	SPGX 11T3-C1	SCGX 09T308..	0,5	0,3
33	99	SD503-33-99-32R7	189	129	60	104	32	50	SPGX 11T3-C1	SCGX 09T308..	0,5	0,5
33	99	SD503-33-99-40R7	197	129	68	104	40	50	SPGX 11T3-C1	SCGX 09T308..	0,5	0,5
34	102	SD503-34-102-32R7	192	132	60	107	32	50	SPGX 11T3-C1	SCGX 09T308..	0,25	0,5
34	102	SD503-34-102-40R7	200	132	68	107	40	50	SPGX 11T3-C1	SCGX 09T308..	0,25	0,5
35	105	SD503-35-105-32R7	195	135	60	110	32	50	SPGX 11T3-C1	SCGX 120408..	0,25	0,5
35	105	SD503-35-105-40R7	203	135	68	110	40	50	SPGX 11T3-C1	SCGX 120408..	0,25	0,5
35,5	107	SD503-35.5-107-40R7	205	137	68	112	40	50	SPGX 11T3-C1	SCGX 120408..	0,2	0,5
36	108	SD503-36-108-32R7	198	138	60	113	32	50	SPGX 11T3-C1	SCGX 120408..	0,15	0,5
36	108	SD503-36-108-40R7	206	138	68	113	40	50	SPGX 11T3-C1	SCGX 120408..	0,1	0,5
37	111	SD503-37-111-32R7	201	141	60	116	32	50	SPGX 11T3-C1	SCGX 120408..	0,1	0,5
37	111	SD503-37-111-40R7	209	141	68	116	40	50	SPGX 11T3-C1	SCGX 120408..	0,1	0,5
38	114	SD503-38-114-32R7-SP12	204	144	60	119	32	50	SPGX12T3-C1	SCGX 120408..	0,1	0,5
38	114	SD503-38-114-40R7-SP12	212	144	68	119	40	50	SPGX12T3-C1	SCGX 120408..	0,5	0,5
39	117	SD503-39-117-32R7	207	147	60	122	32	50	SPGX12T3-C1	SCGX 120408..	0,5	0,5
39	117	SD503-39-117-40R7	215	147	68	122	40	50	SPGX12T3-C1	SCGX 120408..	0,4	0,5
40	120	SD503-40-120-32R7	210	150	60	125	32	50	SPGX12T3-C1	SCGX 120408..	0,4	0,5
40	120	SD503-40-120-40R7	218	150	68	125	40	50	SPGX12T3-C1	SCGX 120408..	0,2	0,5
41	123	SD503-41-123-40R7	221	153	68	128	40	50	SPGX12T3-C1	SCGX 120408..	0,2	0,5
41,5	125	SD503-41.5-125-40R7	223	155	68	130	40	50	SPGX12T3-C1	SCGX 120408..	0,2	0,5
42	126	SD503-42-126-40R7	224	156	68	131	40	50	SPGX12T3-C1	SCGX 120408..	0,15	0,5
43	129	SD503-43-129-40R7	227	159	68	134	40	50	SPGX12T3-C1	SCGX 120408..	0,1	0,5
44	132	SD503-44-132-40R7	230	162	68	137	40	50	SPGX1504-C1	SCGX 120408..	0,5	0,5
44,5	134	SD503-44.5-134-40R7	232	164	68	139	40	50	SPGX1504-C1	SCGX 150512..	0,5	0,5
45	135	SD503-45-135-40R7	233	165	68	140	40	59	SPGX1504-C1	SCGX 150512..	0,5	0,5
46	138	SD503-46-138-40R7	236	168	68	143	40	59	SPGX1504-C1	SCGX 150512..	0,5	0,5
47	141	SD503-47-141-40R7	239	171	68	146	40	59	SPGX1504-C1	SCGX 150512..	0,5	0,5
47,5	143	SD503-47.5-143-40R7	241	173	68	148	40	59	SPGX 1504-C1	SCGX 150512..	0,5	0,5
48	144	SD503-48-144-40R7	242	174	68	149	40	59	SPGX 1504-C1	SCGX 150512..	0,5	0,5
49	147	SD503-49-147-40R7	245	177	68	152	40	59	SPGX 1504-C1	SCGX 150512..	0,3	0,5
50	150	SD503-50-150-40R7	248	180	68	155	40	59	SPGX 1504-C1	SCGX 150512..	0,15	0,5
51	153	SD503-51-153-40R7	251	183	68	158	40	59	SPGX 1504-C1	SCGX 150512..	0,15	0,5
52	156	SD503-52-156-40R7	254	186	68	161	40	59	SPGX 1904-C1	SCGX 150512..	0,5	0,5
53	159	SD503-53-159-40R7	257	189	68	164	40	59	SPGX 1904-C1	SCGX 150512..	0,5	0,5
54	162	SD503-54-162-40R7	260	192	68	167	40	59	SPGX 1904-C1	SCGX 150512..	0,5	0,5
55	165	SD503-55-165-40R7	263	195	68	170	40	59	SPGX 1904-C1	SCGX 150512..	0,5	0,5
56	168	SD503-56-168-40R7	266	198	68	173	40	59	SPGX 1904-C1	SCGX 150512..	0,5	0,5
57	171	SD503-57-171-40R7	269	201	68	176	40	59	SPGX 1904-C1	SCGX 150512..	0,35	0,5
58	174	SD503-58-174-40R7	272	204	68	179	40	59	SPGX 1904-C1	SCGX 150512..	0,15	0,5
59	177	SD503-59-177-40R7	275	207	68	182	40	59	SPGX 1904-C1	SCGX 150512..	0,15	0,5

Drilling depth 3 x D

Seco-Capto™ C4 shank



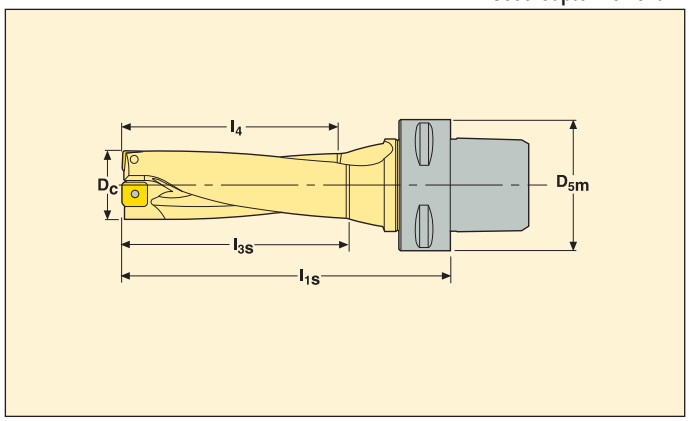

- For insert information see pages 215-217
- For cutting and machining data see pages 220-221
- Spare parts and accessories see page 203

			Dimensions in mm			Insert		Radial adjustment	
D_c	l_4	Part No.	l_{1s}	l_{3s}	D_{5m}	Centre insert	Periph insert	-	+
15	45	SD503-15-45-C4	82	50	40	SPGX0502-C1	SCGX050204..	0,25	0,35
15,5	47	SD503-15.5-47-C4	84	52	40	SPGX0502-C1	SCGX050204..	0,3	0,35
16	48	SD503-16-48-C4	86	53	40	SPGX0502-C1	SCGX050204..	0,15	0,45
16,5	50	SD503-16.5-50-C4	88	55	40	SPGX0502-C1	SCGX050204..	0,15	0,4
17	51	SD503-17-51-C4	89	56	40	SPGX0502-C1	SCGX050204..	0,1	0,5
17,5	53	SD503-17.5-53-C4	92	58	40	SPGX0602-C1	SCGX050204..	0,5	0,5
18	54	SD503-18-54-C4	93	59	40	SPGX0602-C1	SCGX050204..	0,35	0,25
18,5	56	SD503-18.5-56-C4	95	61	40	SPGX0602-C1	SCGX050204..	0,35	0,25
19	57	SD503-19-57-C4	96	62	40	SPGX0602-C1	SCGX050204..	0,15	0,45
20	60	SD503-20-60-C4	101	65	40	SPGX0602-C1	SCGX060204..	0,1	0,45
20,62	62	SD503-20.62-62-C4	103	67	40	SPGX0602-C1	SCGX060204..	0,1	0,5
21	63	SD503-21-63-C4	104	68	40	SPGX0602-C1	SCGX060204..	0,1	0,5
22	66	SD503-22-66-C4	107	71	40	SPGX0703-C1	SCGX060204..	0,45	0,5
22,23	67	SD503-22.23-67-C4	108	72	40	SPGX0703-C1	SCGX060204..	0,45	0,5
23	69	SD503-23-69-C4	111	74	40	SPGX0703-C1	SCGX070308..	0,35	0,5
24	72	SD503-24-72-C4	115	77	40	SPGX0703-C1	SCGX070308..	0,15	0,5
25	75	SD503-25-75-C4	119	80	40	SPGX0703-C1	SCGX070308..	0,15	0,5
25,4	77	SD503-25.4-77-C4	121	82	40	SPGX0703-C1	SCGX070308..	0,15	0,5
26	78	SD503-26-78-C4	122	83	40	SPGX0903-C1	SCGX070308..	0,5	0,15
27	81	SD503-27-81-C4	125	86	40	SPGX0903-C1	SCGX070308..	0,5	0,3
28	84	SD503-28-84-C4	129	89	40	SPGX0903-C1	SCGX070308..	0,3	0,5
28,59	86	SD503-28.59-86-C4	131	91	40	SPGX0903-C1	SCGX09T308..	0,2	0,5
29	87	SD503-29-87-C4	132	92	40	SPGX0903-C1	SCGX09T308..	0,2	0,5
30	90	SD503-30-90-C4	135	95	40	SPGX0903-C1	SCGX09T308..	0,15	0,5

Drilling depth 3 x D



- For insert information see pages 215-217
- For cutting and machining data see pages 220-221
- Spare parts and accessories see page 203

Seco-Capto™ C5 shank

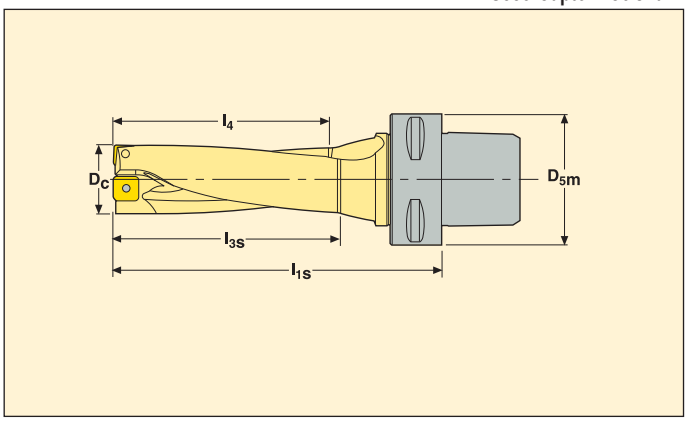

D_c	l_4	Part No.	Dimensions in mm			Insert		Radial adjustment	
			l_{1s}	l_{3s}	D_{5m}	Centre insert	Periph insert	-	+
15	45	SD503-15-45-C5	82	50	50	SPGX0502-C1	SCGX050204..	0,25	0,35
15,5	47	SD503-15.5-47-C5	84	52	50	SPGX0502-C1	SCGX050204..	0,3	0,35
16	48	SD503-16-48-C5	86	53	50	SPGX0502-C1	SCGX050204..	0,15	0,45
16,5	50	SD503-16.5-50-C5	88	55	50	SPGX0502-C1	SCGX050204..	0,15	0,4
17	51	SD503-17-51-C5	89	56	50	SPGX0502-C1	SCGX050204..	0,1	0,5
17,5	53	SD503-17.5-53-C5	92	58	50	SPGX0602-C1	SCGX050204..	0,5	0,5
18	54	SD503-18-54-C5	93	59	50	SPGX0602-C1	SCGX050204..	0,35	0,25
18,5	56	SD503-18.5-56-C5	95	61	50	SPGX0602-C1	SCGX050204..	0,35	0,25
19	57	SD503-19-57-C5	96	62	50	SPGX0602-C1	SCGX050204..	0,15	0,45
20	60	SD503-20-60-C5	101	65	50	SPGX0602-C1	SCGX060204..	0,1	0,45
20,62	62	SD503-20.62-62-C5	103	67	50	SPGX0602-C1	SCGX060204..	0,1	0,5
21	63	SD503-21-63-C5	104	68	50	SPGX0602-C1	SCGX060204..	0,1	0,5
22	66	SD503-22-66-C5	107	71	50	SPGX0703-C1	SCGX060204..	0,45	0,5
22,23	67	SD503-22.23-67-C5	108	72	50	SPGX0703-C1	SCGX060204..	0,45	0,5
23	69	SD503-23-69-C5	111	74	50	SPGX0703-C1	SCGX070308..	0,35	0,5
24	72	SD503-24-72-C5	115	77	50	SPGX0703-C1	SCGX070308..	0,15	0,5
25	75	SD503-25-75-C5	119	80	50	SPGX0903-C1	SCGX070308..	0,15	0,5
25,4	77	SD503-25.4-77-C5	121	82	50	SPGX0903-C1	SCGX070308..	0,15	0,5
26	78	SD503-26-78-C5	122	83	50	SPGX0903-C1	SCGX070308..	0,5	0,15
27	81	SD503-27-81-C5	125	86	50	SPGX0903-C1	SCGX070308..	0,5	0,3
28	84	SD503-28-84-C5	129	89	50	SPGX0903-C1	SCGX070308..	0,3	0,5
28,59	86	SD503-28.59-86-C5	131	91	50	SPGX0903-C1	SCGX090T308..	0,2	0,5
29	87	SD503-29-87-C5	132	92	50	SPGX0903-C1	SCGX090T308..	0,2	0,5
30	90	SD503-30-90-C5	135	95	50	SPGX0903-C1	SCGX090T308..	0,15	0,5
31	93	SD503-31-93-C5	138	98	50	SPGX0903-C1	SCGX090T308..	0,15	0,5
31,75	96	SD503-31.75-96-C5	142	101	50	SPGX11T3-C1	SCGX090T308..	0,5	0,35
32	96	SD503-32-96-C5	142	101	50	SPGX11T3-C1	SCGX090T308..	0,5	0,35
33	99	SD503-33-99-C5	145	104	50	SPGX11T3-C1	SCGX090T308..	0,5	0,5
34	102	SD503-34-102-C5	148	107	50	SPGX11T3-C1	SCGX090T308..	0,25	0,5
35	105	SD503-35-105-C5	151	110	50	SPGX11T3-C1	SCGX120408..	0,25	0,5
36	108	SD503-36-108-C5	154	113	50	SPGX11T3-C1	SCGX120408..	0,1	0,5
37	111	SD503-37-111-C5	157	116	50	SPGX11T3-C1	SCGX120408..	0,1	0,5
38	114	SD503-38-114-C5	160	119	50	SPGX12T3-C1	SCGX120408..	0,5	0,5
39	117	SD503-39-117-C5	163	122	50	SPGX12T3-C1	SCGX120408..	0,4	0,5
40	120	SD503-40-120-C5	166	125	50	SPGX12T3-C1	SCGX120408..	0,2	0,5

Drilling depth 3 x D



- For insert information see pages 215-217
- For cutting and machining data see pages 220-221
- Spare parts and accessories see page 203

Seco-Capto™ C6 shank

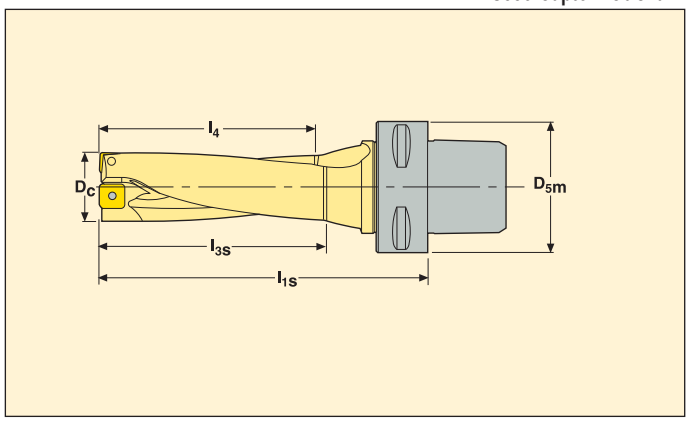

D_c	l_4	Part No.	Dimensions in mm			Insert		Radial adjustment	
			l_{1s}	l_{3s}	D_{5m}	Centre insert	Periph insert	-	+
15	45	SD503-15-45-C6	84	50	63	SPGX0502-C1	SCGX050204..	0,25	0,35
15,5	47	SD503-15.5-47-C6	86	52	63	SPGX0502-C1	SCGX050204..	0,3	0,35
16	48	SD503-16-48-C6	88	53	63	SPGX0502-C1	SCGX050204..	0,15	0,45
16,5	50	SD503-16.5-50-C6	90	55	63	SPGX0502-C1	SCGX050204..	0,15	0,4
17	51	SD503-17-51-C6	91	56	63	SPGX0502-C1	SCGX050204..	0,1	0,5
17,5	53	SD503-17.5-53-C6	94	58	63	SPGX0602-C1	SCGX050204..	0,5	0,5
18	54	SD503-18-54-C6	95	59	63	SPGX0602-C1	SCGX050204..	0,35	0,25
18,5	56	SD503-18.5-56-C6	97	61	63	SPGX0602-C1	SCGX050204..	0,35	0,25
19	57	SD503-19-57-C6	98	62	63	SPGX0602-C1	SCGX050204..	0,15	0,45
20	60	SD503-20-60-C6	103	65	63	SPGX0602-C1	SCGX060204..	0,1	0,45
20,62	62	SD503-20.62-62-C6	105	67	63	SPGX0602-C1	SCGX060204..	0,1	0,5
21	63	SD503-21-63-C6	106	68	63	SPGX0602-C1	SCGX060204..	0,1	0,5
22	66	SD503-22-66-C6	109	71	63	SPGX0703-C1	SCGX060204..	0,45	0,5
22,23	67	SD503-22.23-67-C6	110	72	63	SPGX0703-C1	SCGX060204..	0,45	0,5
23	69	SD503-23-69-C6	113	74	63	SPGX0703-C1	SCGX070308..	0,35	0,5
24	72	SD503-24-72-C6	117	77	63	SPGX0703-C1	SCGX070308..	0,15	0,5
25	75	SD503-25-75-C6	121	80	63	SPGX0703-C1	SCGX070308..	0,15	0,5
25,4	77	SD503-25.4-77-C6	123	82	63	SPGX0703-C1	SCGX070308..	0,15	0,5
26	78	SD503-26-78-C6	124	83	63	SPGX0903-C1	SCGX070308..	0,5	0,15
27	81	SD503-27-81-C6	127	86	63	SPGX0903-C1	SCGX070308..	0,5	0,3
28	84	SD503-28-84-C6	131	89	63	SPGX0903-C1	SCGX070308..	0,3	0,5
28,59	86	SD503-28.59-86-C6	133	91	63	SPGX0903-C1	SCGX09T308..	0,2	0,5
29	87	SD503-29-87-C6	134	92	63	SPGX0903-C1	SCGX09T308..	0,2	0,5
30	90	SD503-30-90-C6	137	95	63	SPGX0903-C1	SCGX09T308..	0,15	0,5
31	93	SD503-31-93-C6	140	98	63	SPGX0903-C1	SCGX09T308..	0,15	0,5
31,75	96	SD503-31.75-96-C6	144	101	63	SPGX11T3-C1	SCGX09T308..	0,5	0,35
32	96	SD503-32-96-C6	144	101	63	SPGX11T3-C1	SCGX09T308..	0,5	0,35
33	99	SD503-33-99-C6	147	104	63	SPGX11T3-C1	SCGX09T308..	0,5	0,5
34	102	SD503-34-102-C6	150	107	63	SPGX11T3-C1	SCGX09T308..	0,25	0,5
35	105	SD503-35-105-C6	153	110	63	SPGX11T3-C1	SCGX120408..	0,25	0,5
36	108	SD503-36-108-C6	156	113	63	SPGX11T3-C1	SCGX120408..	0,1	0,5
37	111	SD503-37-111-C6	159	116	63	SPGX11T3-C1	SCGX120408..	0,1	0,5
38	114	SD503-38-114-C6	162	119	63	SPGX12T3-C1	SCGX120408..	0,5	0,5
39	117	SD503-39-117-C6	165	122	63	SPGX12T3-C1	SCGX120408..	0,4	0,5
40	120	SD503-40-120-C6	168	125	63	SPGX12T3-C1	SCGX120408..	0,2	0,5

Drilling depth 3 x D

ABS 50 compatible shank, -2



- For insert information see pages 215-217
- For cutting and machining data see pages 220-221
- Internal coolant
- Spare parts and accessories see page 203

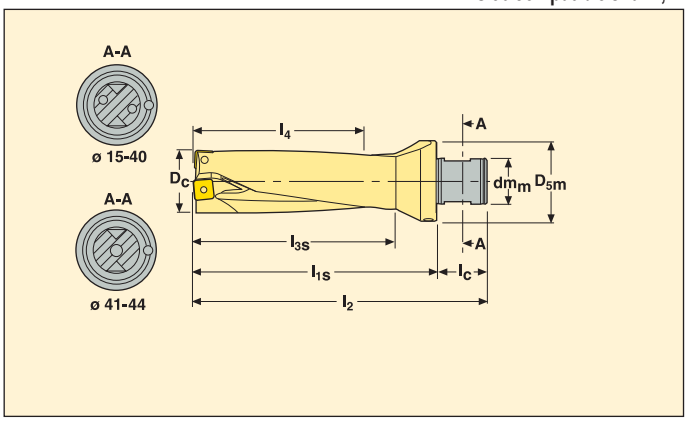

D_c	l_4	Part No.	Dimensions in mm						Insert		Radial adjustment	
			l_2	l_{1s}	l_c	l_{3s}	dm_m	D_{5m}	Centre insert	Periph insert	-	+
15	45	SD503-15-45-50R2	106	75	31	50	28	50	SPGX0502-C1	SCGX050204..	0,25	0,35
15,5	47	SD503-15.5-47-50R2	108	77	31	52	28	50	SPGX0502-C1	SCGX050204..	0,3	0,35
16	48	SD503-16-48-50R2	109	78	31	53	28	50	SPGX0502-C1	SCGX050204..	0,15	0,45
16,5	50	SD503-16.5-50-50R2	111	80	31	55	28	50	SPGX0502-C1	SCGX050204..	0,15	0,4
17	51	SD503-17-51-50R2	112	81	31	56	28	50	SPGX0502-C1	SCGX050204..	0,1	0,5
17,5	53	SD503-17.5-53-50R2	114	83	31	58	28	50	SPGX0602-C1	SCGX050204..	0,5	0,5
18	54	SD503-18-54-50R2	115	86	31	61	28	50	SPGX0602-C1	SCGX050204..	0,35	0,25
18,5	56	SD503-18.5-56-50R2	116	86	31	61	28	50	SPGX0602-C1	SCGX050204..	0,35	0,25
19	57	SD503-19-57-50R2-SC05	118	87	31	62	28	50	SPGX0602-C1	SCGX050204..	0,15	0,45
20	60	SD503-20-60-50R2	121	90	31	65	28	50	SPGX0602-C1	SCGX060204..	0,1	0,45
20,62	62	SD503-20.62-62-50R2	123	92	31	67	28	50	SPGX0602-C1	SCGX060204..	0,1	0,5
21	63	SD503-21-63-50R2	124	93	31	68	28	50	SPGX0602-C1	SCGX060204..	0,1	0,5
22	66	SD503-22-66-50R2	127	96	31	71	28	50	SPGX0703-C1	SCGX060204..	0,45	0,5
22,23	67	SD503-22.23-67-50R2	128	97	31	72	28	50	SPGX0703-C1	SCGX060204..	0,2	0,5
23	69	SD503-23-69-50R2	130	99	31	74	28	50	SPGX0703-C1	SCGX070308..	0,35	0,5
24	72	SD503-24-72-50R2	133	102	31	77	28	50	SPGX0703-C1	SCGX070308..	0,15	0,5
25	75	SD503-25-75-50R2	136	105	31	80	28	50	SPGX0703-C1	SCGX070308..	0,15	0,5
25,4	77	SD503-25.40-77-50R2	138	107	31	82	28	50	SPGX0703-C1	SCGX070308..	0,1	0,5
26	78	SD503-26-78-50R2-SP09	139	108	31	83	28	50	SPGX0903-C1	SCGX070308..	0,5	0,15
27	81	SD503-27-81-50R2	142	111	31	86	28	50	SPGX0903-C1	SCGX070308..	0,5	0,3
28	84	SD503-28-84-50R2-SC07	145	114	31	89	28	50	SPGX0903-C1	SCGX070308..	0,3	0,5
28,59	86	SD503-28.59-86-50R2	147	116	31	91	28	50	SPGX0903-C1	SCGX09T308..	0,5	0,5
29	87	SD503-29-87-50R2	148	117	31	92	28	50	SPGX0903-C1	SCGX09T308..	0,2	0,5
30	90	SD503-30-90-50R2	151	120	31	95	28	50	SPGX0903-C1	SCGX09T308..	0,15	0,5
31	93	SD503-31-93-50R2	154	123	31	98	28	50	SPGX0903-C1	SCGX09T308..	0,15	0,5
31,75	96	SD503-31.75-96-50R2-SP11	157	126	31	101	28	50	SPGX11T3-C1	SCGX09T308..	0,15	0,5
32	96	SD503-32-96-50R2-SP11	157	126	31	101	28	50	SPGX11T3-C1	SCGX09T308..	0,5	0,35
33	99	SD503-33-99-50R2	160	129	31	104	28	50	SPGX11T3-C1	SCGX09T308..	0,5	0,5
34	102	SD503-34-102-50R2	163	132	31	107	28	50	SPGX11T3-C1	SCGX09T308..	0,25	0,5
35	105	SD503-35-105-50R2	166	135	31	110	28	50	SPGX11T3-C1	SCGX120408..	0,25	0,5
36	108	SD503-36-108-50R2	169	138	31	113	28	50	SPGX11T3-C1	SCGX120408..	0,1	0,5
37	111	SD503-37-111-50R2	172	141	31	116	28	50	SPGX11T3-C1	SCGX120408..	0,1	0,5
38	114	SD503-38-114-50R2-SP12	175	144	31	119	28	50	SPGX12T3-C1	SCGX120408..	0,5	0,5
39	117	SD503-39-117-50R2	178	147	31	122	28	50	SPGX12T3-C1	SCGX120408..	0,4	0,5
40	120	SD503-40-120-50R2	181	150	31	125	28	50	SPGX12T3-C1	SCGX120408..	0,2	0,5
41	123	SD503-41-123-50R2	184	153	31	128	28	50	SPGX12T3-C1	SCGX120408..	0,2	0,5
42	126	SD503-42-126-50R2	187	156	31	131	28	50	SPGX12T3-C1	SCGX120408..	0,15	0,5
43	129	SD503-43-129-50R2	190	159	31	134	28	50	SPGX12T3-C1	SCGX120408..	0,1	0,5
44	132	SD503-44-132-50R2	193	162	31	137	28	50	SPGX1504-C1	SCGX120408..	0,5	0,5
44,45	134	SD503-44.45-134-50R2	195	164	31	139	28	50	SPGX1504-C1	SCGX120408..	0,5	0,5

Drilling depth 4 x D

ISO 9766 shank, -7



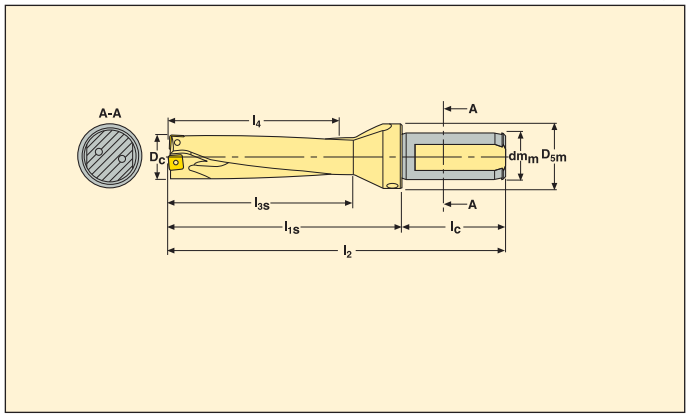

- For insert information see pages 215-217
- For cutting and machining data see pages 222-223
- Internal coolant
- Spare parts and accessories see page 203

			Dimensions in mm						Insert	
D_c	l_4	Part No.	l_2	l_{1s}	l_c	l_{3s}	dm_m	D_{5m}	Centre insert	Periph insert
17	68	SD504-17-68-25R7	154	98	56	73	25	35	SPGX0502-C1	SCGX050204..
17,5	70	SD504-17.5-70-25R7	156	100	56	75	25	35	SPGX0602-C1	SCGX050204..
18	72	SD504-18-72-25R7	158	102	56	77	25	35	SPGX0602-C1	SCGX050204..
18,5	74	SD504-18.5-74-25R7	160	104	56	79	25	35	SPGX0602-C1	SCGX050204..
19	76	SD504-19-76-25R7-SC05	162	106	56	81	25	35	SPGX0602-C1	SCGX050204..
20	80	SD504-20-80-25R7	166	110	56	85	25	35	SPGX0602-C1	SCGX060204..
21	84	SD504-21-84-25R7	170	114	56	89	25	35	SPGX0602-C1	SCGX060204..
22	88	SD504-22-88-25R7	174	118	56	93	25	35	SPGX0703-C1	SCGX060204..
23	92	SD504-23-92-25R7	178	122	56	97	25	35	SPGX0703-C1	SCGX070308..
24	96	SD504-24-96-25R7	182	126	56	101	25	35	SPGX0703-C1	SCGX070308..
25	100	SD504-25-100-32R7	190	130	60	105	32	42	SPGX0703-C1	SCGX070308..
26	104	SD504-26-104-32R7-SP09	194	134	60	109	32	42	SPGX0903-C1	SCGX070308..
27	108	SD504-27-108-32R7	198	138	60	113	32	42	SPGX0903-C1	SCGX070308..
28	112	SD504-28-112-32R7-SC07	202	142	30	117	32	42	SPGX0903-C1	SCGX070308..
29	116	SD504-29-116-32R7	206	146	60	121	32	42	SPGX0903-C1	SCGX09T308..
30	120	SD504-30-120-32R7	210	150	60	125	32	42	SPGX0903-C1	SCGX09T308..
31	124	SD504-31-124-32R7	214	154	60	129	32	42	SPGX0903-C1	SCGX09T308..
32	128	SD504-32-128-40R7-SP11	226	158	68	133	40	50	SPGX11T3-C1	SCGX09T308..
33	132	SD504-33-132-40R7	230	162	68	137	40	50	SPGX11T3-C1	SCGX09T308..
34	136	SD504-34-136-40R7	234	166	68	141	40	50	SPGX11T3-C1	SCGX09T308..
35	140	SD504-35-140-40R7	238	170	68	145	40	50	SPGX11T3-C1	SCGX120408..
36	144	SD504-36-144-40R7	242	174	68	149	40	50	SPGX11T3-C1	SCGX120408..
37	148	SD504-37-148-40R7	246	178	68	153	40	50	SPGX11T3-C1	SCGX120408..
38	152	SD504-38-152-40R7-SP12	250	182	68	157	40	50	SPGX12T3-C1	SCGX120408..
39	156	SD504-39-156-40R7	254	186	68	161	40	50	SPGX12T3-C1	SCGX120408..
40	160	SD504-40-160-40R7	258	190	68	165	40	50	SPGX12T3-C1	SCGX120408..
41	164	SD504-41-164-40R7	262	194	68	169	40	50	SPGX12T3-C1	SCGX120408..
42	168	SD504-42-168-40R7	266	198	68	173	40	50	SPGX12T3-C1	SCGX120408..
43	172	SD504-43-172-40R7	270	202	68	177	40	50	SPGX12T3-C1	SCGX120408..
44	176	SD504-44-176-40R7	274	206	68	181	40	50	SPGX1504-C1	SCGX120408..
45	180	SD504-45-180-40R7	278	210	68	185	40	59	SPGX1504-C1	SCGX150512..
46	184	SD504-46-184-40R7	282	214	68	189	40	59	SPGX1504-C1	SCGX150512..
47	188	SD504-47-188-40R7	286	218	68	193	40	59	SPGX1504-C1	SCGX150512..
48	192	SD504-48-192-40R7	290	222	68	197	40	59	SPGX1504-C1	SCGX150512..
49	196	SD504-49-196-40R7	294	226	68	201	40	59	SPGX1504-C1	SCGX150512..
50	200	SD504-50-200-40R7	298	230	68	205	40	59	SPGX1504-C1	SCGX150512..
51	204	SD504-51-204-40R7	302	234	68	209	40	59	SPGX1504-C1	SCGX150512..
52	208	SD504-52-208-40R7	306	238	68	213	40	59	SPGX1904-C1	SCGX150512..
53	212	SD504-53-212-40R7	310	242	68	217	40	59	SPGX1904-C1	SCGX150512..
54	216	SD504-54-216-40R7	314	246	68	221	40	59	SPGX1904-C1	SCGX150512..
55	220	SD504-55-220-40R7	318	250	68	225	40	59	SPGX1904-C1	SCGX150512..

Drilling depth 4 x D

ISO 9766 shank, -7

D_c	l_4	Part No.	Dimensions in mm						Insert	
			l_2	l_{1s}	l_c	l_{3s}	dm_m	D_{5m}	Centre insert	Periph insert
56	224	SD504-56-224-40R7	322	254	68	229	40	59	SPGX1904-C1	SCGX150512..
57	228	SD504-57-228-40R7	326	258	68	233	40	59	SPGX1904-C1	SCGX150512..
58	232	SD504-58-232-40R7	330	262	68	237	40	59	SPGX1904-C1	SCGX150512..
59	236	SD504-59-236-40R7	334	266	68	241	40	59	SPGX1904-C1	SCGX150512..

Drilling depth 4 x D



Seco-Capto™ C4 shank

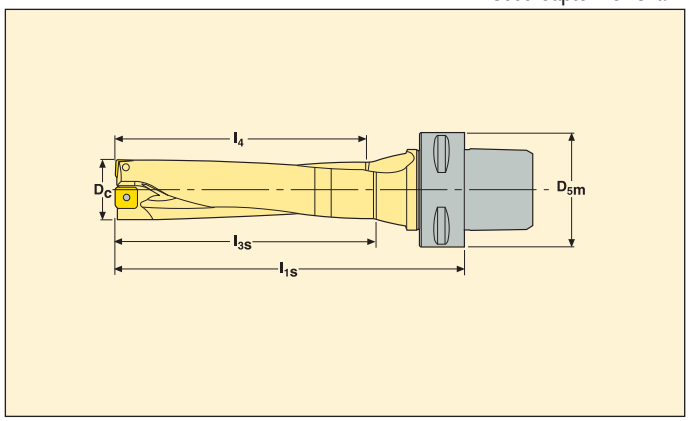

- For insert information see pages 215-217
- For cutting and machining data see pages 222-223
- Spare parts and accessories see page 203

			Dimensions in mm			Insert	
D_c	l_4	Part No.	l_{1s}	l_{3s}	D_{5m}	Centre insert	Periph insert
17	68	SD504-17-68-C4	106	73	40	SPGX0502-C1	SCGX050204..
17,5	70	SD504-17.5-70-C4	109	75	40	SPGX0602-C1	SCGX050204..
18	72	SD504-18-72-C4	111	77	40	SPGX0602-C1	SCGX050204..
18,5	74	SD504-18.5-74-C4	113	79	40	SPGX0602-C1	SCGX050204..
19	76	SD504-19-76-C4	115	81	40	SPGX0602-C1	SCGX050204..
20	80	SD504-20-80-C4	121	85	40	SPGX0602-C1	SCGX060204..
20,62	83	SD504-20.62-83-C4	124	88	40	SPGX0602-C1	SCGX060204..
21	84	SD504-21-84-C4	125	89	40	SPGX0602-C1	SCGX060204..
22	88	SD504-22-88-C4	129	93	40	SPGX0703-C1	SCGX060204..
22,23	89	SD504-22.23-89-C4	130	94	40	SPGX0703-C1	SCGX060204..
23	92	SD504-23-92-C4	134	97	40	SPGX0703-C1	SCGX070308..
24	96	SD504-24-96-C4	139	101	40	SPGX0703-C1	SCGX070308..
25	100	SD504-25-100-C4	144	105	40	SPGX0703-C1	SCGX070308..
25,4	102	SD504-25.4-102-C4	146	107	40	SPGX0703-C1	SCGX070308..
26	104	SD504-26-104-C4	148	109	40	SPGX0903-C1	SCGX070308..
27	108	SD504-27-108-C4	152	113	40	SPGX0903-C1	SCGX070308..
28	112	SD504-28-112-C4	157	117	40	SPGX0903-C1	SCGX070308..
28,59	115	SD504-28.59-115-C4	160	120	40	SPGX0903-C1	SCGX09T308..
29	116	SD504-29-116-C4	161	121	40	SPGX0903-C1	SCGX09T308..
30	120	SD504-30-120-C4	165	125	40	SPGX0903-C1	SCGX09T308..

Drilling depth 4 x D

Seco-Capto™ C5 shank



- For insert information see pages 215-217
- For cutting and machining data see pages 222-223
- Spare parts and accessories see page 203

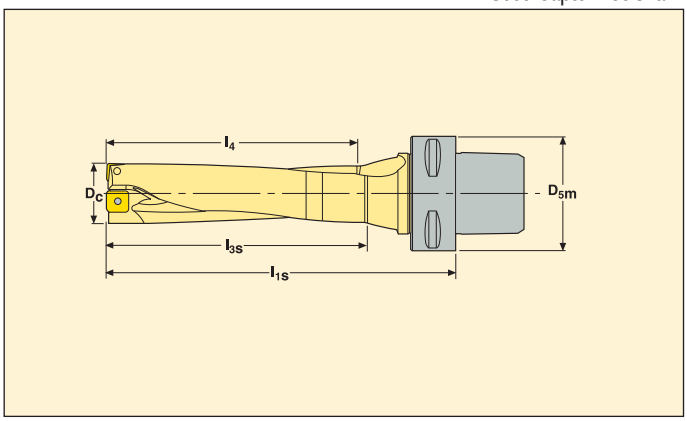

D_c	l_4	Part No.	Dimensions in mm			Insert	
			l_{1s}	l_{3s}	D_{5m}	Centre insert	Periph insert
17	68	SD504-17-68-C5	106	73	50	SPGX0502-C1	SCGX050204..
17,5	70	SD504-17.5-70-C5	109	75	50	SPGX0602-C1	SCGX050204..
18	72	SD504-18-72-C5	111	77	50	SPGX0602-C1	SCGX050204..
18,5	74	SD504-18.5-74-C5	113	79	50	SPGX0602-C1	SCGX050204..
19	76	SD504-19-76-C5	115	81	50	SPGX0602-C1	SCGX050204..
20	80	SD504-20-80-C5	121	85	50	SPGX0602-C1	SCGX060204..
20,62	83	SD504-20.62-83-C5	124	88	50	SPGX0602-C1	SCGX060204..
21	84	SD504-21-84-C5	125	89	50	SPGX0602-C1	SCGX060204..
22	88	SD504-22-88-C5	129	93	50	SPGX0703-C1	SCGX060204..
22,23	89	SD504-22.23-89-C5	130	94	50	SPGX0703-C1	SCGX060204..
23	92	SD504-23-92-C5	134	97	50	SPGX0703-C1	SCGX070308..
24	96	SD504-24-96-C5	139	101	50	SPGX0703-C1	SCGX070308..
25	100	SD504-25-100-C5	144	105	50	SPGX0703-C1	SCGX070308..
25,4	102	SD504-25.4-102-C5	146	107	50	SPGX0703-C1	SCGX070308..
26	104	SD504-26-104-C5	148	109	50	SPGX0903-C1	SCGX070308..
27	108	SD504-27-108-C5	152	113	50	SPGX0903-C1	SCGX070308..
28	112	SD504-28-112-C5	157	117	50	SPGX0903-C1	SCGX070308..
28,59	115	SD504-28.59-115-C5	160	120	50	SPGX0903-C1	SCGX09T308..
29	116	SD504-29-116-C5	161	121	50	SPGX0903-C1	SCGX09T308..
30	120	SD504-30-120-C5	165	125	50	SPGX0903-C1	SCGX09T308..
31	124	SD504-31-124-C5	169	129	50	SPGX0903-C1	SCGX09T308..
31,75	127	SD504-31.75-127-C5	173	132	50	SPGX11T3-C1	SCGX09T308..
32	128	SD504-32-128-C5	174	133	50	SPGX11T3-C1	SCGX09T308..
33	132	SD504-33-132-C5	178	137	50	SPGX11T3-C1	SCGX09T308..
34	136	SD504-34-136-C5	182	141	50	SPGX11T3-C1	SCGX09T308..
35	140	SD504-35-140-C5	186	145	50	SPGX11T3-C1	SCGX120408..
36	144	SD504-36-144-C5	190	149	50	SPGX11T3-C1	SCGX120408..
37	148	SD504-37-148-C5	194	153	50	SPGX11T3-C1	SCGX120408..
38	152	SD504-38-152-C5	198	157	50	SPGX12T3-C1	SCGX120408..
39	156	SD504-39-156-C5	202	161	50	SPGX12T3-C1	SCGX120408..
40	160	SD504-40-160-C5	206	165	50	SPGX12T3-C1	SCGX120408..

Drilling depth 4 x D



Seco-Capto™ C6 shank

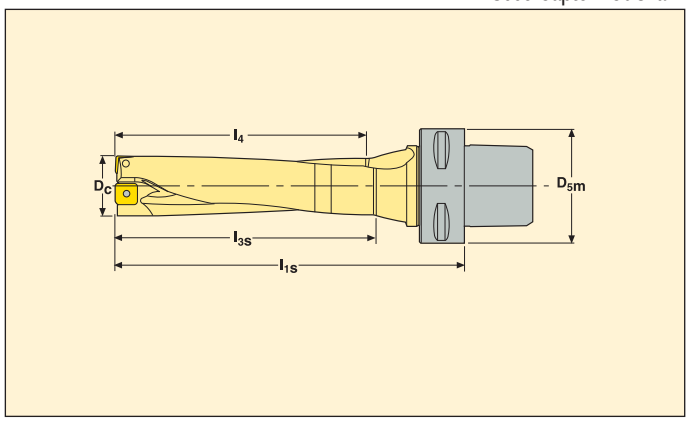

- For insert information see pages 215-217
- For cutting and machining data see pages 222-223
- Spare parts and accessories see page 203

			Dimensions in mm			Insert	
D_c	l_4	Part No.	l_{1s}	l_{3s}	D_{5m}	Centre insert	Periph insert
17	68	SD504-17-68-C6	108	73	63	SPGX0502-C1	SCGX050204..
17,5	70	SD504-17.5-70-C6	111	75	63	SPGX0602-C1	SCGX050204..
18	72	SD504-18-72-C6	113	77	63	SPGX0602-C1	SCGX050204..
18,5	74	SD504-18.5-74-C6	115	79	63	SPGX0602-C1	SCGX050204..
19	76	SD504-19-76-C6	117	81	63	SPGX0602-C1	SCGX050204..
20	80	SD504-20-80-C6	123	85	63	SPGX0602-C1	SCGX060204..
20,62	83	SD504-20.62-83-C6	126	88	63	SPGX0602-C1	SCGX060204..
21	84	SD504-21-84-C6	127	89	63	SPGX0602-C1	SCGX060204..
22	88	SD504-22-88-C6	131	93	63	SPGX0703-C1	SCGX060204..
22,23	89	SD504-22.23-89-C6	132	94	63	SPGX0703-C1	SCGX060204..
23	92	SD504-23-92-C6	136	97	63	SPGX0703-C1	SCGX070308..
24	96	SD504-24-96-C6	141	101	63	SPGX0703-C1	SCGX070308..
25	100	SD504-25-100-C6	146	105	63	SPGX0703-C1	SCGX070308..
25,4	102	SD504-25.4-102-C6	148	107	63	SPGX0703-C1	SCGX070308..
26	104	SD504-26-104-C6	150	109	63	SPGX0903-C1	SCGX070308..
27	108	SD504-27-108-C6	154	113	63	SPGX0903-C1	SCGX070308..
28	112	SD504-28-112-C6	159	117	63	SPGX0903-C1	SCGX070308..
28,59	115	SD504-28.59-115-C6	162	120	63	SPGX0903-C1	SCGX09T308..
29	116	SD504-29-116-C6	163	121	63	SPGX0903-C1	SCGX09T308..
30	120	SD504-30-120-C6	167	125	63	SPGX0903-C1	SCGX09T308..
31	124	SD504-31-124-C6	171	129	63	SPGX0903-C1	SCGX09T308..
31,75	127	SD504-31.75-127-C6	175	132	63	SPGX11T3-C1	SCGX09T308..
32	128	SD504-32-128-C6	176	133	63	SPGX11T3-C1	SCGX09T308..
33	132	SD504-33-132-C6	180	137	63	SPGX11T3-C1	SCGX09T308..
34	136	SD504-34-136-C6	184	141	63	SPGX11T3-C1	SCGX09T308..
35	140	SD504-35-140-C6	188	145	63	SPGX11T3-C1	SCGX120408..
36	144	SD504-36-144-C6	192	149	63	SPGX11T3-C1	SCGX120408..
37	148	SD504-37-148-C6	196	153	63	SPGX11T3-C1	SCGX120408..
38	152	SD504-38-152-C6	200	157	63	SPGX12T3-C1	SCGX120408..
39	156	SD504-39-156-C6	204	161	63	SPGX12T3-C1	SCGX120408..
40	160	SD504-40-160-C6	208	165	63	SPGX12T3-C1	SCGX120408..

Drilling depth 4 x D

ABS 50 compatible shank, -2



- For insert information see pages 215-217
- For cutting and machining data see pages 222-223
- Internal coolant
- Spare parts and accessories see page 203

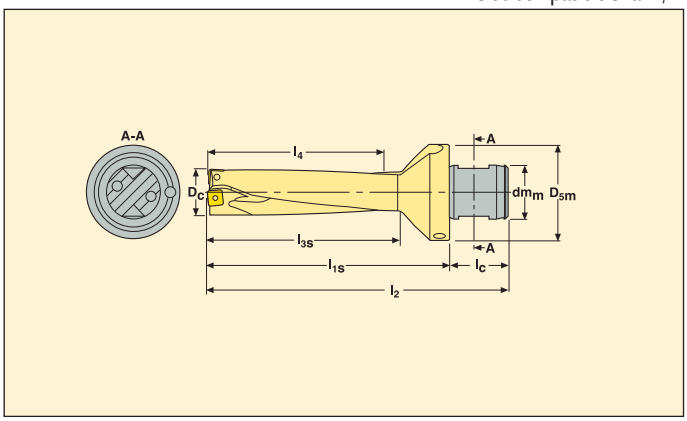

D_c	l_4	Part No.	Dimensions in mm			Insert	
			l_{1s}	l_{3s}	D_{5m}	Centre insert	Periph insert
17	68	SD504-17-68-50R2	98	73	50	SPGX0502-C1	SCGX050204..
17,5	70	SD504-17.5-70-50R2	100	75	50	SPGX0602-C1	SCGX050204..
18	72	SD504-18-72-50R2	102	77	50	SPGX0602-C1	SCGX050204..
18,5	74	SD504-18.5-74-50R2	104	79	50	SPGX0602-C1	SCGX050204..
19	76	SD504-19-76-50R2-SC05	106	81	50	SPGX0602-C1	SCGX050204..
20	80	SD504-20-80-50R2	110	85	50	SPGX0602-C1	SCGX060204..
20,62	83	SD504-20.62-83-50R2	113	88	50	SPGX0602-C1	SCGX060204..
21	84	SD504-21-84-50R2	114	89	50	SPGX0602-C1	SCGX060204..
22	88	SD504-22-88-50R2	118	93	50	SPGX0703-C1	SCGX060204..
22,23	89	SD504-22.23-89-50R2	119	94	50	SPGX0703-C1	SCGX070308..
23	92	SD504-23-92-50R2	122	97	50	SPGX0703-C1	SCGX070308..
24	96	SD504-24-96-50R2	126	101	50	SPGX0703-C1	SCGX070308..
25	100	SD504-25-100-50R2	130	105	50	SPGX0703-C1	SCGX070308..
25,4	102	SD504-25.4-102-50R2	132	107	50	SPGX0703-C1	SCGX070308..
26	104	SD504-26-104-50R2-SP09	134	109	50	SPGX0903-C1	SCGX070308..
27	108	SD504-27-108-50R2	138	113	50	SPGX0903-C1	SCGX070308..
28	112	SD504-28-112-50R2-SC07	142	117	50	SPGX0903-C1	SCGX070308..
28,59	115	SD504-28.59-115-50R2	145	120	50	SPGX0903-C1	SCGX09T308..
29	116	SD504-29-116-50R2	146	121	50	SPGX0903-C1	SCGX09T308..
30	120	SD504-30-120-50R2	150	125	50	SPGX0903-C1	SCGX09T308..
31	124	SD504-31-124-50R2	154	129	50	SPGX0903-C1	SCGX09T308..
32	128	SD504-32-128-50R2-SP11	158	133	50	SPGX11T3-C1	SCGX09T308..
33	132	SD504-33-132-50R2	162	137	50	SPGX11T3-C1	SCGX09T308..
34	136	SD504-34-136-50R2	166	141	50	SPGX11T3-C1	SCGX09T308..
35	140	SD504-35-140-50R2	170	145	50	SPGX11T3-C1	SCGX120408..
36	144	SD504-36-144-50R2	174	149	50	SPGX11T3-C1	SCGX120408..
37	148	SD504-37-148-50R2	178	153	50	SPGX11T3-C1	SCGX120408..
38	152	SD504-38-152-50R2-SP12	182	157	50	SPGX12T3-C1	SCGX120408..
39	156	SD504-39-156-50R2	186	161	50	SPGX12T3-C1	SCGX120408..
40	160	SD504-40-160-50R2	190	165	50	SPGX12T3-C1	SCGX120408..

Drilling depth 5 x D

ISO 9766 shank, -7



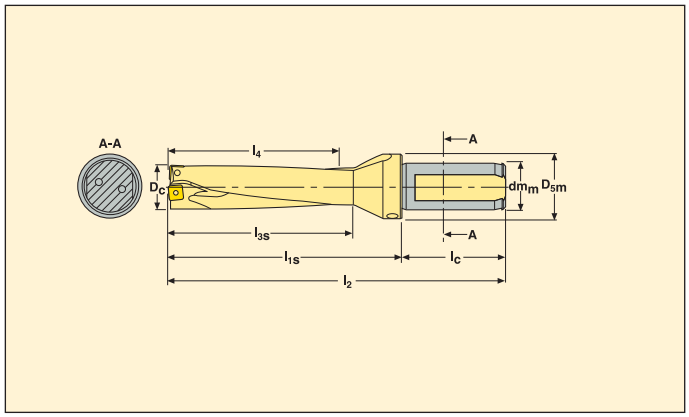

- For insert information see pages 215-217
- For cutting and machining data see pages 224-225
- Internal coolant
- Spare parts and accessories see page 203

			Dimensions in mm						Insert	
D_c	l_4	Part No.	l_2	l_{1s}	l_c	l_{3s}	dm_m	D_{5m}	Centre insert	Periph insert
19	95	SD505-19-95-25R7-SC05	181	125	56	100	25	35	SPGX0602-C1	SCGX050204..
20	100	SD505-20-100-25R7	186	130	56	105	25	35	SPGX0602-C1	SCGX060204..
21	105	SD505-21-105-25R7	191	135	56	110	25	35	SPGX0602-C1	SCGX060204..
22	110	SD505-22-110-25R7	196	140	56	115	25	35	SPGX0703-C1	SCGX060204..
23	115	SD505-23-115-25R7	201	145	56	120	25	35	SPGX0703-C1	SCGX070308..
24	120	SD505-24-120-25R7	206	150	56	125	25	35	SPGX0703-C1	SCGX070308..
25	125	SD505-25-125-32R7	215	155	60	130	32	42	SPGX0703-C1	SCGX070308..
26	130	SD505-26-130-32R7-SP09	220	160	60	135	32	42	SPGX0903-C1	SCGX070308..
27	135	SD505-27-135-32R7	225	165	60	140	32	42	SPGX0903-C1	SCGX070308..
28	140	SD505-28-140-32R7-SC07	230	170	60	145	32	42	SPGX0903-C1	SCGX070308..
29	145	SD505-29-145-32R7	235	175	60	150	32	42	SPGX0903-C1	SCGX09T308..
30	150	SD505-30-150-32R7	240	180	60	155	32	42	SPGX0903-C1	SCGX09T308..
31	155	SD505-31-155-32R7	245	185	60	160	32	42	SPGX0903-C1	SCGX09T308..
32	160	SD505-32-160-40R7-SP11	258	190	68	165	40	50	SPGX11T3-C1	SCGX09T308..
33	165	SD505-33-165-40R7	263	195	68	170	40	50	SPGX11T3-C1	SCGX09T308..
34	170	SD505-34-170-40R7	268	200	68	175	40	50	SPGX11T3-C1	SCGX09T308..
35	175	SD505-35-175-40R7	273	205	68	180	40	50	SPGX11T3-C1	SCGX120408..
36	180	SD505-36-180-40R7	278	210	68	185	40	50	SPGX11T3-C1	SCGX120408..
37	185	SD505-37-185-40R7	283	215	68	190	40	50	SPGX11T3-C1	SCGX120408..
38	190	SD505-38-190-40R7-SP12	288	220	68	195	40	50	SPGX12T3-C1	SCGX120408..
39	195	SD505-39-195-40R7	293	225	68	200	40	50	SPGX12T3-C1	SCGX120408..
40	200	SD505-40-200-40R7	298	230	68	205	40	50	SPGX12T3-C1	SCGX120408..
41	205	SD505-41-205-40R7	303	235	68	210	40	50	SPGX12T3-C1	SCGX120408..
42	210	SD505-42-210-40R7	308	240	68	215	40	50	SPGX12T3-C1	SCGX120408..
43	215	SD505-43-215-40R7	313	245	68	220	40	50	SPGX12T3-C1	SCGX120408..
44	220	SD505-44-220-40R7	318	250	68	225	40	50	SPGX1504-C1	SCGX120408..
45	225	SD505-45-225-40R7	323	255	68	230	40	50	SPGX1504-C1	SCGX150512..

Drilling depth 5 x D

ABS 50 compatible shank, -2



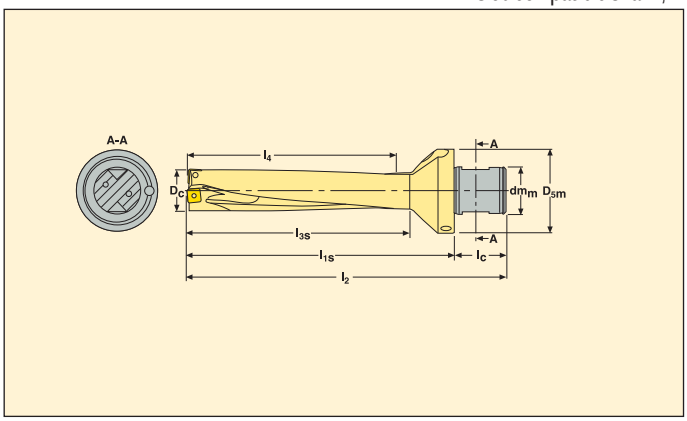

- For insert information see pages 215-217
- For cutting and machining data see pages 224-225
- Internal coolant
- Spare parts and accessories see page 203

D_c	l_4	Part No.	Dimensions in mm						Insert	
			l_2	l_{1s}	l_c	l_{3s}	dm_m	D_{5m}	Centre insert	Periph insert
19	95	SD505-19-95-50R2-SC05	156	125	31	100	28	50	SPGX0602-C1	SCGX050204..
20	100	SD505-20-100-50R2	161	130	31	105	28	50	SPGX0602-C1	SCGX060204..
21	105	SD505-21-105-50R2	166	135	31	110	28	50	SPGX0602-C1	SCGX060204..
22	110	SD505-22-110-50R2	171	140	31	115	28	50	SPGX0703-C1	SCGX060204..
23	115	SD505-23-115-50R2	176	145	31	120	28	50	SPGX0703-C1	SCGX070308..
24	120	SD505-24-120-50R2	181	150	31	125	28	50	SPGX0703-C1	SCGX070308..
25	125	SD505-25-125-50R2	186	155	31	130	28	50	SPGX0703-C1	SCGX070308..
26	130	SD505-26-130-50R2-SP09	191	160	31	135	28	50	SPGX0903-C1	SCGX070308..
27	135	SD505-27-135-50R2	196	165	31	140	28	50	SPGX0903-C1	SCGX070308..
28	140	SD505-28-140-50R2-SC07	201	170	31	145	28	50	SPGX0903-C1	SCGX070308..
29	145	SD505-29-145-50R2	206	175	31	150	28	50	SPGX0903-C1	SCGX09T308..
30	150	SD505-30-150-50R2	211	180	31	155	28	50	SPGX0903-C1	SCGX09T308..
31	155	SD505-31-155-50R2	216	185	31	160	28	50	SPGX0903-C1	SCGX09T308..

Drilling depth 2,5 x D

ISO 9766 shank, -7



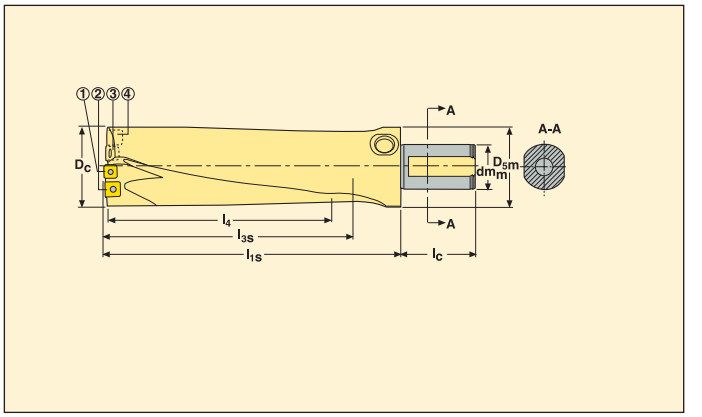

- For insert information see pages 215-217
- For cutting and machining data see pages 226-227
- Internal 'through' coolant
- Spare parts and accessories see page 203

D_c	l_4	Part No.	Dimensions in mm					Insert	
			l_{1s}	l_c	l_{3s}	dm_m	D_{5m}	Centre insert	Periph insert
60	150	SD542-60-150-40R7	201,5	68	156	40	79	SPGX0903-C1	SPCX 09T308..
65	162,5	SD542-65-162.5-40R7	214	68	169,5	40	79	SPGX11T3-C1	SPCX 09T308..
70	175	SD542-70-175-40R7	226,5	68	182,5	40	79	SPGX11T3-C1	SPCX 120408..
75	187,5	SD542-75-187.5-50R7	239	78	196	50	79	SPGX12T3-C1	SPCX 120408..
80	200	SD542-80-200-50R7	251,5	78	210	50	79	SPGX12T3-C1	SPCX 120408..
85	212,5	SD542-85-212.5-50R7	264	78	221	50	89	SPGX12T3-C1	SPCX 120408..

Drilling depth 2 x D

ISO 9766 shank, -7



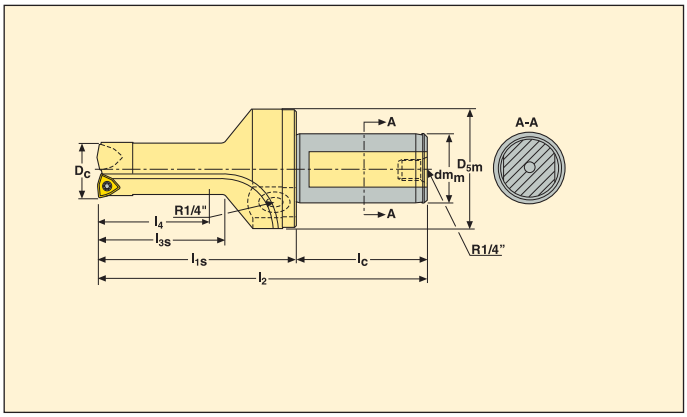

- For insert information see pages 215-217
- For cutting and machining data see pages 228-229
- Internal coolant
- Spare parts and accessories see page 203

D_C	Hole dia min-max (mm)	l_4	Part No.	Dimensions in mm						Insert	
				l_{1s}	l_2	l_c	l_{3s}	dm_m	D_{5m}	Centre insert	Periph insert
15	14,8-18	30	SD572-15-30-25R7	65	121	56	35	25	42	WCMX030208-86	WCMX030208..
16	15,8-18	32	SD572-16-32-25R7	67	123	56	37	25	42	WCMX030208-86	WCMX030208..
17	16,8-19	34	SD572-17-34-25R7	69	125	56	39	25	42	WCMX030208-86	WCMX030208..
19	18,8-22	38	SD572-19-38-25R7	73	129	56	43	25	42	WCMX040208-86	WCMX030208..
22	21,8-27	44	SD572-22-44-25R7	79	135	56	49	25	42	WCMX050308-86	WCMX040208..
27	26,8-33	54	SD572-27-54-32R7	89	149	60	59	32	50	WCMX06T308-86	WCMX050308..
33	32,8-41	66	SD572-33-66-40R7	101	169	68	71	40	59	WCMX080412-86	WCMX06T308..
41	40,8-47	82	SD572-41-82-40R7	117	185	68	87	40	59	WCMX080412-86	WCMX080412..
47	46,8-52	94	SD572-47-94-40R7	129	197	68	99	40	59	WCMX080412-86	WCMX080412..

Drilling depth 2 x D

Seco-Capto™ C5 shank



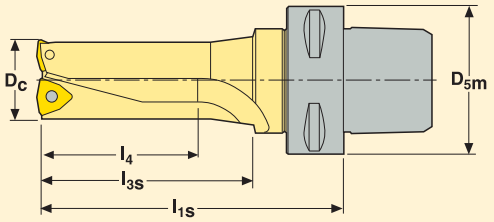

- For insert information see pages 215-217
- For cutting and machining data see pages 228-229
- Internal coolant
- Spare parts and accessories see page 203

D_c	Hole dia min-max (mm)	l_4	Part No.	Dimensions in mm			Insert	
				l_{1s}	l_{3s}	D_{5m}	Centre insert	Periph insert
15	14,8-18	30	SD572-15-30-C5	85	35	50	WCMX030208-86	WCMX030208..
16	15,8-18	32	SD572-16-32-C5	87	37	50	WCMX030208-86	WCMX030208..
17	16,8-19	34	SD572-17-34-C5	89	39	50	WCMX030208-86	WCMX030208..
19	18,8-22	38	SD572-19-38-C5	93	43	50	WCMX040208-86	WCMX030208..
22	21,8-27	44	SD572-22-44-C5	99	49	50	WCMX050308-86	WCMX040208..
27	26,8-33	54	SD572-27-54-C5	109	59	50	WCMX06T308-86	WCMX050308..
33	32,8-41	66	SD572-33-66-C5	121	71	50	WCMX080412-86	WCMX06T308..
41	40,8-47	82	SD572-41-82-C5	157	87	50	WCMX080412-86	WCMX080412..
47	46,8-52	94	SD572-47-94-C5	169	99	50	WCMX080412-86	WCMX080412..

Spare parts – SD502, SD503, SD504 & SD505

For drill dia (mm)	Insert screw		Insert key		Accessories*		
	Centre insert	Periph insert			Torque key**	Replacement blade	Torque value
15,00-17,45	C02245-T07P	C02245-T07P	T07P-2		T00-07P09	T00-07P	0,9 Nm
17,46-19,49	C02205-T07P	C02245-T07P	T07P-2		T00-07P09	T00-07P	0,9 Nm
19,50-21,24	C02205-T07P	C02205-T07P	T07P-2		T00-07P09	T00-07P	0,9 Nm
21,25-22,49	C02506-T08P	C02506-T08P	T08P-2		T00-08P12	T00-08P	1,2 Nm
22,50-25,49	C02507-T08P	C03007-T08P	T08P-2		T00-08P12	T00-08P	1,2 Nm
25,50-28,49	C03007-T09P	C03007-T08P	T09P-2		T00-09P20	T00-09P	2,0 Nm
28,50-31,49	C03007-T09P	C03009-T08P	T09P-2		T00-09P20	T00-09P	2,0 Nm
31,50-34,49	C03508-T15P	C03508-T15P	T15P-2D		T00-15P30	T00-15P	3,0 Nm
34,50-43,24	C03508-T15P	C05012-T15P	T15P-2D		T00-15P30	T00-15P	3,0 Nm
43,25-59,00	C04011-T15P	C05012-T15P	T15P-2D		T00-15P30	T00-15P	3,0 Nm

Spare Parts – SD542

For drill dia (mm)	Insert screw		Insert key	Blanking screw	Hose adapter	Accessories*		
	Insert 1	Insert 2, 3, 4				Torque key**	Replacement blade	Torque value
60,00-64,99	C03007-T07P	C03009-T09P	T09P-2	R3/8"	R3/8"-HA	T00-09P20	T00-09P	3,0 Nm
65,00-68,99	C03508-T07P	C03508-T15P	T15P-2D	R3/8"	R3/8"-HA	T00-15P30	T00-15P	3,0 Nm
69,00-86,99	C03508-T08P	C05012-T15P	T15P-2D	R3/8"	R3/8"-HA	T00-15P30	T00-15P	3,0 Nm

Spare Parts – SD572

For drill dia (mm)	Insert screw		Insert key	Blanking screw	Hose adapter	Accessories*		
	Centre insert	Periph insert				Torque key**	Replacement blade	Torque value
15,00 - 20,50	C02205-T07P	C02205-T07P	T07P-2	R1/4"	1310	T00-07P09	T00-07P	0,9 Nm
20,51 - 24,50	C03007-T08P	C02506-T08P	T08P-2	R1/4"	1310	T00-08P12	T00-08P	1,2 Nm
24,51 - 32,50	C03508-T15P	C03007-T08P	T15P-2D, T08P-2	R1/4"	1310	T00-08P12	T00-08P	1,2 Nm
32,51 - 36,50	C03508-T15P	C03508-T15P	T15P-2D	R1/4"	1310	T00-15P30	T00-15P	3,0 Nm
36,51 - 59,00	C04011-T15P	C04011-T15P	T15P-2D	R1/4"	1310	T00-15P30	T00-15P	3,0 Nm

* Accessories not included in delivery.
**Including blade.



Code key – Drilling bodies

Type of drill:
SD602 Pilot drill and cassette
SD612 Without pilot drill and cassette

Flange diameter

Connection for Graflex

SD602 - 89/90 - 50 RG

Possible drill diameter
89 - Lower diameter
90 - Nominal diameter

Code key – Pilot drill

Drill diameter

SD601 1 - 10 - R

0=Solid carbide
1=HSS

Right-hand rotation

Code key – Cassette

N - Nominal diameter

SD600 - C - 07 -N

C - Centre
P - Periphery

Insert size:
SCGX07
SCGX09
SCGX12
SCGX15



-N



Code key – Kit

Periphery

SD602 1 - P - 07 - N

0 = incl 2 pads (< ∅ 135 mm)
1 = incl 4 pads (≥ ∅ 135 mm)

Insert size
SCGX07
SCGX09
SCGX12
SCGX15

N - Nominal diameter
U - Undersize diameter



-N



-U

Code key – Pad

PAD - L20R25 -N

N - Nominal diameter

SD602 - Modular drill head



- For cutting and machining data see page 230-231
- Internal coolant
- Adjustable length pilot drill

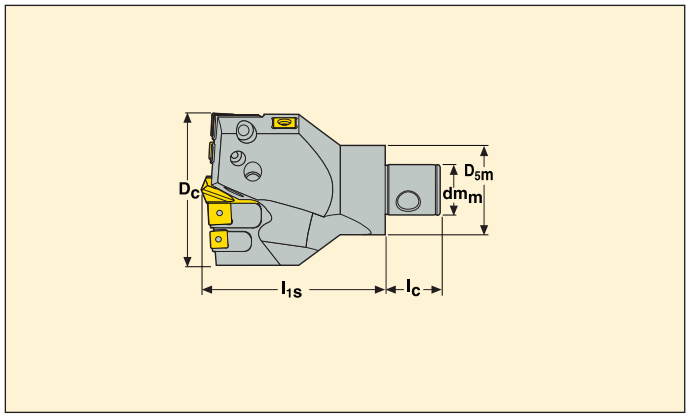

D_c	Part No.	Dimensions in mm				Graflex size	KG
		l_1	l_c	dm_m	D_{5m}		
59-60	SD602-59/60-40RG	105-108	24	22	40	4	0,88
69-70	SD602-69/70-40RG	105-108	24	22	40	4	1,05
79-80	SD602-79/80-50RG	130-135	30	28	50	5	1,75
89-90	SD602-89/90-50RG	130-135	30	28	50	5	1,91
99-100	SD602-99/100-63RG	145-150	40	36	63	6	3,04
119-120	SD602-119/120-63RG	145-150	40	36	63	6	3,49
139-140	SD602-139/140-90RG	160-165	50	46	90	7	6,04
159-160	SD602-159/160-90RG	160-165	50	46	90	7	6,6
62,5-63,5	SD602-2500-40RG	105-108	24	22	40	4	1,05
68,85-69,85	SD602-2750-40RG	105-108	24	22	40	4	1,02
75,2-76,2	SD602-3000-40RG	105-110	24	22	40	4	1,06
81,55-82,55	SD602-3250-50RG	130-135	30	28	50	5	1,78
87,9-88,9	SD602-3500-50RG	130-135	30	28	50	5	1,89
100,6-101,6	SD602-4000-63RG	145-150	40	36	63	6	3,12

Spare parts

Cassette*	Cassette	Cassette screw	Washer	Insert screw	Insert key	Guide pad*	Guide pad*	Pad screw
SD600-x-07	SD600-P-07-N	K6S4x8	LW0408	C03007-T09P	T09P-2, T15P-20	PAD-L20R25	PAD-L20R25-N	C04014-T15P
SD600-x-09	SD600-P-09-N	K6S4x8	LW0408	C03508-T15P	T15P-2D	PAD-L20R25	PAD-L20R25-N	C04014-T15P
SD600-x-12	SD600-P-12-N	K6S6x10	LW0611	C05012-T15P	T15P-2D	PAD-L20R25	PAD-L20R25-N	C04014-T15P
SD600-x-15	SD600-P-15-N	K6S6x12	LW0611	C05012-T15P	T15P-2D	PAD-L20R25	PAD-L20R25-N	C04014-T15P

* Not included in delivery

SD602 - Modular drill head

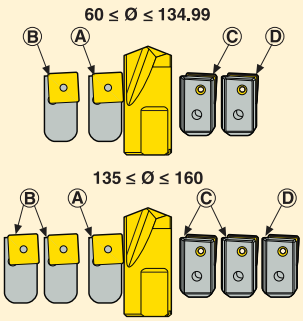

Spare parts, included in delivery

For drill diameter (mm)	For drill diameter (inch)	Pilot screw	Adjusting screw	Cassette (A)	Cassette (B)	Cassette (C)	Periph kit*	Pilot drill** x=0 Solid carbide drill x=1 HSS drill
59	2.310	P6SS 8X8	19TLR0816	SD600-C-07	SD600-C-07	SD600-P-07	SD6020-P-07-U	SD601x-10-R
60	2.349	P6SS 8X8	19TLR0816	SD600-C-07	SD600-C-07	SD600-P-07	SD6020-P-07-N	SD601x-10-R
62,5	2.447	P6SS 8X8	19TLR0816	SD600-C-07	SD600-C-07	SD600-P-07	SD6020-P-07-U	SD601x-10-R
63,5	2.486	P6SS 8X8	19TLR0816	SD600-C-07	SD600-C-07	SD600-P-07	SD6020-P-07-N	SD601x-10-R
68,85	2.695	P6SS 8X8	19TLR0816	SD600-C-09	SD600-C-07	SD600-P-07	SD6020-P-09-U	SD601x-10-R
69,85	2.735	P6SS 8X8	19TLR0816	SD600-C-09	SD600-C-09	SD600-P-09	SD6020-P-09-N	SD601x-10-R
69	2.702	P6SS 8X8	19TLR0816	SD600-C-09	SD600-C-09	SD600-P-09	SD6020-P-09-U	SD601x-10-R
70	2.740	P6SS 8X8	19TLR0816	SD600-C-09	SD600-C-09	SD600-P-09	SD6020-P-09-N	SD601x-10-R
72,66	2.845	P6SS 8X8	19TLR0816	SD600-C-09	SD600-C-09	SD600-P-09	SD6020-P-09-U	SD601x-10-R
73,66	2.885	P6SS 8X8	19TLR0816	SD600-C-09	SD600-C-09	SD600-P-09	SD6020-P-09-N	SD601x-10-R
75,2	2.944	P6SS 10X10	19TLR1016	SD600-C-09	SD600-C-09	SD600-P-09	SD6020-P-09-U	SD601x-15-R
76,2	2.983	P6SS 10X10	19TLR1016	SD600-C-09	SD600-C-09	SD600-P-09	SD6020-P-09-N	SD601x-15-R
79	3.093	P6SS 10X10	19TLR1016	SD600-C-09	SD600-C-09	SD600-P-09	SD6020-P-09-U	SD601x-15-R
80	3.132	P6SS 10X10	19TLR1016	SD600-C-09	SD600-C-09	SD600-P-09	SD6020-P-09-N	SD601x-15-R
81,55	3.193	P6SS 10X10	19TLR1016	SD600-C-12	SD600-C-09	SD600-P-09	SD6020-P-09-U	SD601x-15-R
82,55	3.232	P6SS 10X10	19TLR1016	SD600-C-12	SD600-C-09	SD600-P-09	SD6020-P-09-N	SD601x-15-R
87,9	3.441	P6SS 10X10	19TLR1016	SD600-C-12	SD600-C-09	SD600-P-09	SD6020-P-12-U	SD601x-15-R
88,9	3.480	P6SS 10X10	19TLR1016	SD600-C-12	SD600-C-09	SD600-P-09	SD6020-P-12-N	SD601x-15-R
89	3.484	P6SS 10X10	19TLR1016	SD600-C-12	SD600-C-09	SD600-P-09	SD6020-P-12-U	SD601x-15-R
90	3.523	P6SS 10X10	19TLR1016	SD600-C-12	SD600-C-09	SD600-P-09	SD6020-P-12-N	SD601x-15-R
99	3.876	P6SS 10X10	19TLR1016	SD600-C-12	SD600-C-12	SD600-P-12	SD6020-P-12-U	SD601x-15-R
100	3.915	P6SS 10X10	19TLR1016	SD600-C-12	SD600-C-12	SD600-P-12	SD6020-P-12-N	SD601x-15-R
100,6	3.938	P6SS 10X10	19TLR1016	SD600-C-12	SD600-C-12	SD600-P-12	SD6020-P-12-U	SD601x-15-R
101,6	3.978	P6SS 10X10	19TLR1016	SD600-C-12	SD600-C-12	SD600-P-12	SD6020-P-12-N	SD601x-15-R
119	4.659	P6SS 10X10	19TLR1016	SD600-C-15	SD600-C-15	SD600-P-15	SD6020-P-15-U	SD601x-15-R
120	4.698	P6SS 10X10	19TLR1016	SD600-C-15	SD600-C-15	SD600-P-15	SD6020-P-15-N	SD601x-15-R
139	5.442	P6SS 12X12	19TLR1216	SD600-C-12	SD600-C-12	SD600-P-12	SD6020-P-12-U	SD601x-25-R
140	5.481	P6SS 12X12	19TLR1216	SD600-C-12	SD600-C-12	SD600-P-12	SD6020-P-12-N	SD601x-25-R
159	6.225	P6SS 12X12	19TLR1216	SD600-C-15	SD600-C-12	SD600-P-12	SD6020-P-15-U	SD601x-25-R
160	6.264	P6SS 12X12	19TLR1216	SD600-C-15	SD600-C-12	SD600-P-12	SD6020-P-15-N	SD601x-25-R

* Periph kit, U-undersize, N-nominal.
** For insert size see page 215-217.

Adapters – HTS – Graflex adapter



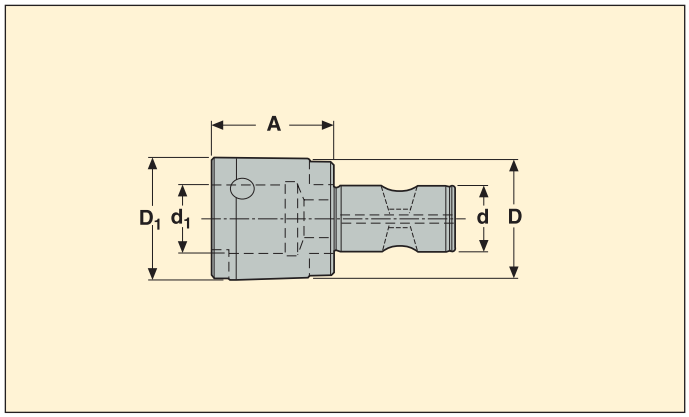

HTS shank	Graflex size	Part No.	Dimensions in mm			
			d_1	A	D	D_1
HTS 22	4	BMH4004012240	22	60	40	40
HTS 27	5	BMH4804012850	28	60	48	50
HTS 32	6	BMH5804013660	36	80	58	63
HTS 40	6	BMH7004013660	36	80	70	63
HTS 50	7	BMH8004014660	46	80	80	90

Adapters – ABS Compatible – Graflex adapter



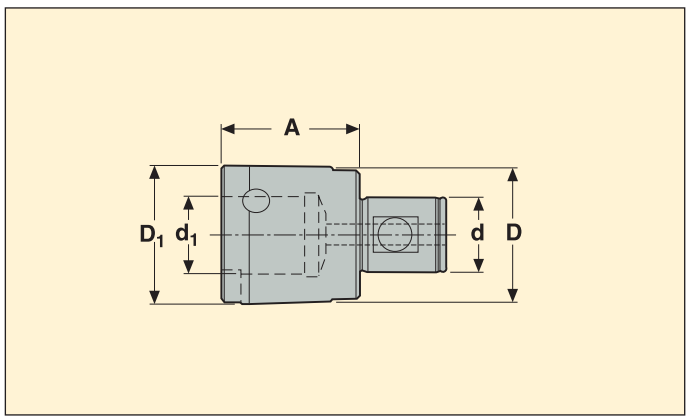

ABS Compatible shank	Graflex size	Part No.	Dimensions in mm			
			d_1	A	D	D_1
ABS28 (50R2)	5	BMA5004012850	28	60	50	50
ABS34 (63R2)	6	BMA6004013660	36	80	63	63
ABS46 (80R2)	7	BMA8004014660	46	80	80	90

Regrinding instructions for SD602

1. Point angle

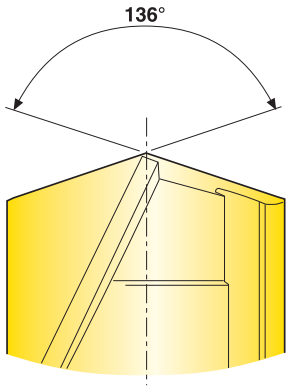

Edge preparation 0,1 mm. Drill point conical relief 10°.

2. Corner chamfer

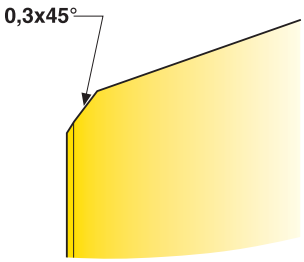

3.

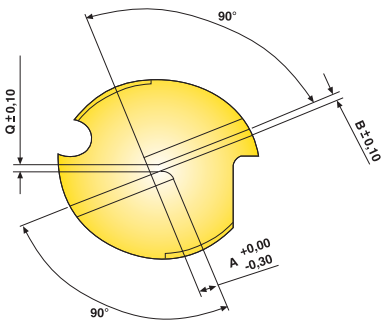

4.

Diameter	A	B	Q	Minimum (length)
10	1,5	0,5	0,57	38
15	1,5	0,6	0,68	45
25	1,5	1,4	1,6	57

Specifications

Proposed specification of diamond wheels:

Conical clearance: Wheel shape12A2 Grit size D54 (figure 1).
Gashing: Wheel shape 1A1 or 1V1 Grit size D64-D46 (figure 3).
Corner chamfer: Wheel shape 1A1 or 12A2
Edge treatment: grinding K-land or brushing (figure 2).

Important:

The cutting edges must be uniform and have the same size of edge preparation.
The edge preparation must be applied on the whole length of the cutting edges.

Modular drill head assembly

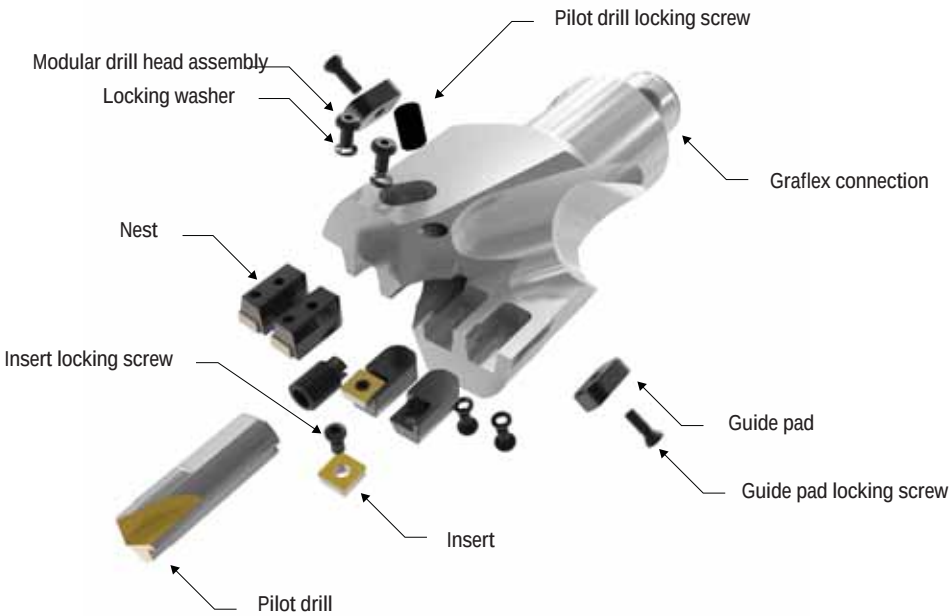

SD602-59/60-40RG



Example diameter 59;



Example diameter 60;

Mounting instruction	Mounting of cartridge and guide pad	
• Tighten the cassette locking screw • Mount the inserts • Mount the pilot drill and fix it to the bottom of the hole if you need to extend the pilot drill use the adjusting screw • Mount the extensions	• Mount the cassette • Make sure that there are no air gaps between the cassette and the walls • Tighten the cassette locking screw with the torque key: SD600-x-07: 3 Nm SD600-x-09: 3 Nm SD600-x-12: 8 Nm SD600-x-15: 8 Nm • Mount the guide pad • Tighten the pad locking screw	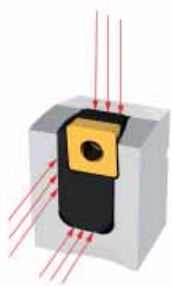

Modular drill head assembly

Feature: Adjustable pilot drill

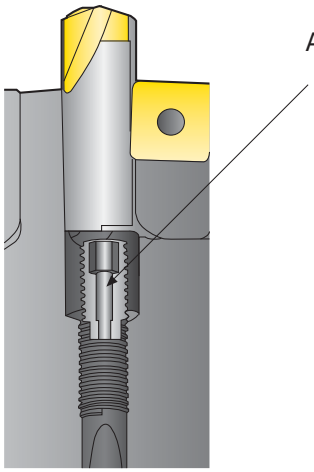

Drill	Adjustable length distance ADJRG
SD602-59/60-40RG	3 mm
SD602-69/70-40RG	3 mm
SD602-79/80-50RG	5 mm
SD602-89/90-50RG	5 mm
SD602-99/100-63RG	5 mm
SD602-119/120-63RG	5 mm
SD602-139/140-90RG	5 mm
SD602-159/160-90RG	5 mm
SD602-2500-40RG	3 mm
SD602-2750-40RG	3 mm
SD602-3000-40RG	5 mm
SD602-3250-50RG	5 mm
SD602-3500-50RG	5 mm
SD602-4000-63RG	5 mm

Adjustable length distance

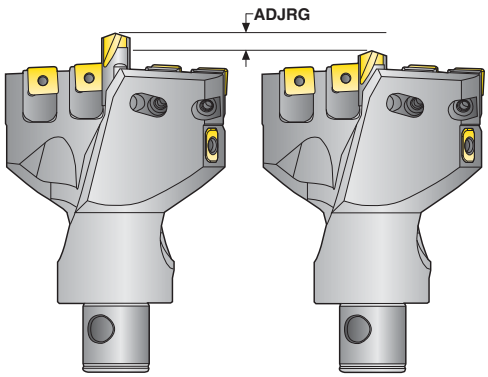

Benefits: Same setting length after regrinding of pilot drill.
Possibility to adjust the pilot drill overhang.
With drill depths > 5 x D it is recommended to adjust it 5 mm further out.

Recommendation: In case of re-entering the hole the pilot drill should be adjusted 3 mm further out from its original position to ensure a better centering.

Modular drill head assembly

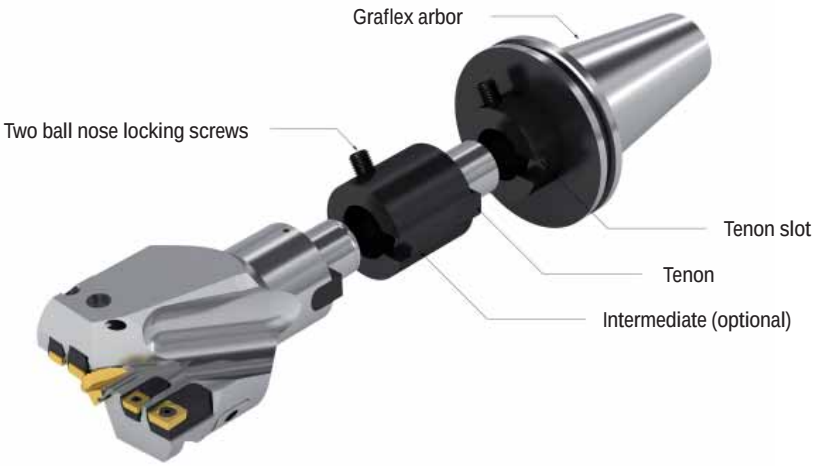

Mounting instruction

1. Clean the parts to be assembled and apply thin oxidation protection film.
2. Assemble the parts ensuring that the left face of the tenon contacts the left face of the tenon slot.
3. Lightly tighten screw A.
4. Lightly tighten screw B.
5. 'Torque' the blocking screw C.
6. 'Torque' screw A.
7. 'Torque' screw B.
8. Double check the blocking screw tightening.

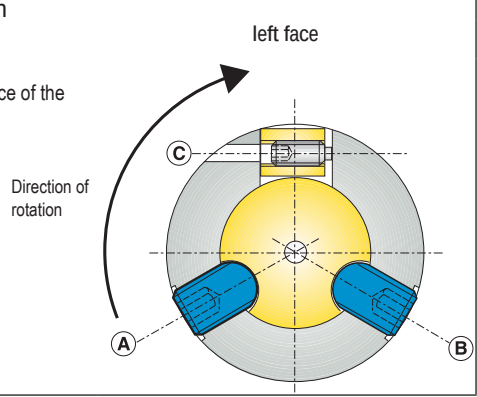

Graflex size	d mm	D mm	l_c mm	Recommended Graflex connection locking torques	
				Ball nose screws (A) & (B)	Tenon blocking screw (C)
4	22	40	24	20 Nm	0,7 Nm
5	28	50	30	25 Nm	2 Nm
6	36	63	40	35 Nm	4 Nm
7	46	90	50	60 Nm	8 Nm

Insert grade

Features:

- 4 cutting edges per insert
- Strong square inserts

Benefits:

- Economy
- Reliability
- Performance
- Low cost per hole

Peripheral insert

	DP2000	• DURATOMIC® coating technology! • Optimised grade for steel and cast iron machining • For machining with very high cutting speeds • A unique combination of superior edge toughness and a thick wear resistant coating • Ti(C,N) + Al_2O_3 DURATOMIC®
	DP3000	• DURATOMIC® coating technology! • Universal grade • Superior wear resistance and edge toughness • Tough grade for maximum application security • Ti(C,N) + Al_2O_3 DURATOMIC® • Gradient substrate
	T250D	• First choice for superalloys and difficult stainless steel • Tough micrograin with TiAlN coating ensures - Extremely good hardness - Extreme resistance to chemical wear and oxidation • PVD coated • (Ti, Al)N + TiN

Centre insert

	T400D	• First choice • Tough centre insert grade for maximum application security • PVD coated • (Ti, Al)N + TiN
	DP3000	• DURATOMIC® coating technology! • Universal grade • Superior wear resistance and edge toughness • Tough grade for maximum application security • Ti(C,N) + Al_2O_3 DURATOMIC® • Gradient substrate

Geometries

SCGX-P1	SCGX-P2	SPGX-C1	WCMX-85	WCMX-86
				

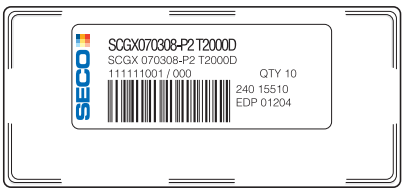

S	C	G	X	06	02	04	-	P1
1	2	3	4	5	6	7		10

1. Insert shape

S



W



2. Insert side clearance angle

C

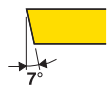

P

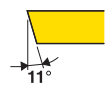

4. Type

X=Special

3. Tolerances

Tol. class	Tolerance +/- mm			For d dimension in mm								
	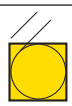 m	 s	 d	5,556	6,35	7,937	7,94	9,525	11,509	12,7	15,875	19,05
G	0,025	0,13	0,025	•	•	•		•	•	•	•	•
M	0,013	0,13	0,05	•	•		•	•				
	0,013	0,13	0,08							•		

5. Cutting edge length

S



W



6. Thickness

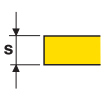

02=2,38 mm
03 = 3,18 mm
T3 = 3,97 mm



04 = 4,76 mm
05 = 5,56 mm

7. Insert with corner chamfers/nose radius



nose radius

04 = 0,4 mm
08 = 0,8 mm
12 = 1,2 mm
etc.

10. Internal designation

e.g. chipbreaker designation

P1 = xx
P2 = xx
85 = xx
86 = xx

Indexable inserts – Peripherial insert, type P1* for, SD502, SD503, SD504, SD505, SD542, SD602

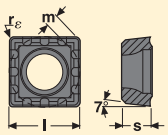

Tolerances:
l = ±0,025
s = ±0,13
m = ±0,025

Size	Dimensions in mm			
	l	s	r_ε	m
06	6,35	2,38	0,40	1,15
07	7,94	3,18	0,79	1,32
09	9,53	3,97	0,79	1,64
12	12,70	4,76	0,79	2,30
15	15,88	5,56	1,19	2,80

SCGX-P1



Inserts	Part No.	Grades			
		T250D	DP2000	DP3000	
SCGX-P1					
	SCGX 060204-P1	■	■	■	
	070308-P1	■	■	■	
	09T308-P1	■	■	■	
	120408-P1	■	■	■	
	150512-P1	■	■	■	

* Chipbreaker for low feed rates and for good surface finish in all materials

Indexable inserts – Peripherial insert, type P2** for, SD502, SD503, SD504, SD505, SD542, SD602

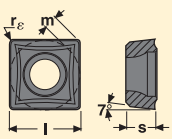

Tolerances:
l = ±0,025
s = ±0,13
m = ±0,025

Size	Dimensions in mm			
	l	s	r_ε	m
05	5,56	2,38	0,40	0,99
06	6,35	2,38	0,40	1,15
07	7,94	3,18	0,80	1,32
09	9,53	3,97	0,80	1,64
12	12,70	4,76	0,80	2,30
15	15,88	5,56	1,20	2,80

SCGX-P2



Inserts	Part No.	Grades			
		T250D	DP2000	DP3000	
SCGX-P2					
	SCGX 050204-P2	■	■	■	
	060204-P2	■	■	■	
	070308-P2	■	■	■	
	09T308-P2	■	■	■	
	120408-P2	■	■	■	
	150512-P2	■	■	■	

■ Stock standard. Subject to change refer to current price- and stock-list.

** Chipbreaker for high feed rates in steel, stainless steel and cast iron

Indexable inserts – Centre insert, type C1 for, SD502, SD503, SD504, SD505, SD542

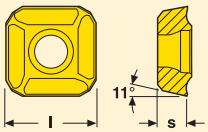

Tolerances:
l = ±0,025
s = ±0,13

Size	Dimensions in mm	
	l	s
05	5,556	2,38
06	6,35	2,38
07	7,937	3,18
09	9,525	3,18
11	11,509	3,97
12	12,7	3,97
15	15,875	4,76
19	19,05	4,76

SPGX-C1



Inserts	Part No.	Grades		
		T400D	DP3000	
SPGX-C1				
	SPGX 0502-C1	■	■	
	0602-C1	■	■	
	0703-C1	■	■	
	0903-C1	■	■	
	11T3-C1	■	■	
	12T3-C1	■	■	
	1504-C1	■	■	
	1904-C1	■	■	

Indexable inserts – Peripherial insert, type 85* for, SD572

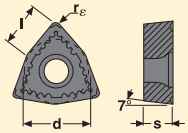

Tolerances:
s = ±0,13
r_ε = ±0,10

Size	Dimensions in mm			
	d	l	s	r_ε
04	6,35	3,99	2,38	0,8
05	7,94	5,07	3,18	0,8
06	9,525	6,14	3,97	0,8
08	12,7	8,14	4,76	1,2

WCMX-85



Inserts	Part No.	Grades	
		DP3000	
WCMX-85			
	WCMX 040208-85	■	
	050308-85	■	
	06T308-85	■	
	080412-85	■	

* Chipbreaker for low feed rates and for good surface finish in all materials.

Indexable inserts – Centre insert & Peripherial insert, type 86** for, SD572

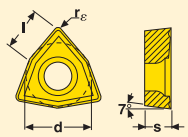

Tolerances:
s = ±0,13
r_ε = ±0,10

Size	Dimensions in mm			
	d	l	s	r_ε
03	5,556	3,46	2,38	0,8
04	6,35	3,99	2,38	0,8
05	7,94	5,07	3,18	0,8
06	9,525	6,14	3,97	0,8
08	12,7	8,14	4,76	1,2

WCMX-86



Inserts	Part No.	Grades			
		T400D	DP2000	DP3000	
WCMX-86					
	WCMX 030208-86	■	■	■	
	040208-86	■	■	■	
	050308-86	■	■	■	
	06T308-86	■	■	■	
	080412-86	■	■	■	

■ Stock standard. Subject to change refer to current price- and stock-list.

** Chipbreaker for high feed rates in steel, stainless steel and cast iron.

Cutting data – SD502 Ø15-60

SMG		f						v_c
		Ø15,00-19,49	Ø19,50-22,49	Ø22,50-28,49	Ø28,50-34,49	Ø34,50-44,49	Ø44,50-59,99	
P1	P1 DP2000	0,11	0,13	0,16	0,18	0,22	0,24	310
P2	P1 DP2000	0,050	0,065	0,085	0,10	0,12	0,14	305
P3	P2 DP3000	0,10	0,13	0,15	0,18	0,20	0,24	210
P4	P2 DP3000	0,10	0,13	0,15	0,17	0,20	0,24	220
P5	P2 DP3000	0,10	0,12	0,15	0,17	0,20	0,22	210
P6	P2 DP3000	0,10	0,12	0,14	0,17	0,19	0,22	235
P7	P2 DP3000	0,10	0,12	0,14	0,17	0,19	0,22	225
P8	P2 DP3000	0,10	0,13	0,15	0,18	0,20	0,24	210
P11	P2 DP3000	0,10	0,12	0,14	0,17	0,19	0,22	215
M1	P2 DP3000	0,11	0,14	0,16	0,19	0,22	0,26	250
M2	P2 DP3000	0,10	0,12	0,15	0,17	0,20	0,22	200
M3	P1 T250D	0,080	0,10	0,12	0,14	0,16	0,18	100
M4	P1 T250D	0,070	0,085	0,10	0,12	0,14	0,16	75
M5	P1 T250D	0,070	0,085	0,10	0,12	0,14	0,16	60
K1	P2 DP2000	0,11	0,14	0,16	0,19	0,22	0,26	240
K2	P2 DP2000	0,10	0,12	0,15	0,17	0,20	0,22	210
K3	P2 DP2000	0,10	0,12	0,15	0,17	0,20	0,22	175
K4	P2 DP2000	0,10	0,12	0,15	0,17	0,20	0,22	170
K5	P2 DP2000	0,090	0,11	0,13	0,15	0,18	0,20	100
N1	P1 T250D	0,14	0,17	0,20	0,24	0,28	0,32	365
N2	P1 T250D	0,14	0,17	0,20	0,24	0,28	0,32	235
N3	P1 T250D	0,14	0,17	0,20	0,24	0,28	0,32	155
N11	P1 T250D	0,14	0,17	0,20	0,24	0,28	0,32	310
S1	P1 T250D	0,070	0,085	0,10	0,12	0,14	0,16	40
S2	P1 T250D	0,070	0,085	0,10	0,12	0,14	0,16	30
S3	P1 T250D	0,065	0,080	0,095	0,11	0,13	0,15	30
S11	P1 T250D	0,080	0,10	0,12	0,14	0,16	0,18	80
S12	P1 T250D	0,080	0,10	0,12	0,14	0,16	0,18	60
S13	P1 T250D	0,070	0,085	0,10	0,12	0,14	0,16	46
H3	P1 T250D	0,046	0,055	0,065	0,075	0,090	0,10	70
H5	P1 T250D	0,070	0,085	0,10	0,12	0,13	0,15	130
H7	P1 T250D	0,046	0,055	0,065	0,075	0,090	0,10	70
H8	P1 T250D	0,050	0,065	0,075	0,090	0,10	0,12	130
H11	P1 T250D	0,070	0,085	0,10	0,12	0,13	0,15	165
H12	P1 T250D	0,070	0,085	0,10	0,12	0,13	0,15	270
H21	P1 T250D	0,050	0,065	0,075	0,090	0,10	0,12	130

SMG = Seco material group
f = mm/rev
v_c= m/min
All cutting data are start values

Cutting data – SD502 Cutting speed

SMG	v_c		
	DP2000	DP3000	T250D
P1	310	250	190
P2	305	245	185
P3	260	210	160
P4	285	220	140
P5	270	210	135
P6	305	235	150
P7	285	225	140
P8	270	210	135
P11	280	215	140
M1	—	250	160
M2	—	200	130
M3	—	155	100
M4	—	115	75
M5	—	95	60
K1	240	180	—
K2	210	155	—
K3	175	130	—
K4	170	125	—
K5	100	75	—
N1	—	420	365
N2	—	270	235
N3	—	180	155
N11	—	350	310
S1	—	—	40
S2	—	—	30
S3	—	—	30
S11	—	—	80
S12	—	—	60
S13	—	—	46
H3	—	70	70
H5	—	130	130
H7	—	70	70
H8	—	130	130
H11	—	165	165
H12	—	270	270
H21	—	130	130

SMG = Seco material group
v_c= m/min
All cutting data are start values

Cutting data – SD503 Ø15-60

SMG		f						v_c
		Ø15,00-19,49	Ø19.50-22,49	Ø22,50-28,49	Ø28,50-34,49	Ø34,50-44,49	Ø44,50-59,99	
P1	P1 DP2000	0,11	0,13	0,16	0,18	0,22	0,24	255
P2	P1 DP2000	0,050	0,065	0,085	0,10	0,12	0,14	245
P3	P2 DP3000	0,10	0,13	0,15	0,18	0,20	0,24	180
P4	P2 DP3000	0,10	0,13	0,15	0,17	0,20	0,24	190
P5	P2 DP3000	0,10	0,12	0,15	0,17	0,20	0,22	180
P6	P2 DP3000	0,10	0,12	0,14	0,17	0,19	0,22	200
P7	P2 DP3000	0,10	0,12	0,14	0,17	0,19	0,22	190
P8	P2 DP3000	0,10	0,13	0,15	0,18	0,20	0,24	180
P11	P2 DP3000	0,10	0,12	0,14	0,17	0,19	0,22	185
M1	P2 DP3000	0,11	0,14	0,16	0,19	0,22	0,26	215
M2	P2 DP3000	0,10	0,12	0,15	0,17	0,20	0,22	170
M3	P1 T250D	0,080	0,10	0,12	0,14	0,16	0,18	85
M4	P1 T250D	0,070	0,085	0,10	0,12	0,14	0,16	65
M5	P1 T250D	0,070	0,085	0,10	0,12	0,14	0,16	55
K1	P2 DP2000	0,11	0,14	0,16	0,19	0,22	0,26	195
K2	P2 DP2000	0,10	0,12	0,15	0,17	0,20	0,22	170
K3	P2 DP2000	0,10	0,12	0,15	0,17	0,20	0,22	145
K4	P2 DP2000	0,10	0,12	0,15	0,17	0,20	0,22	135
K5	P2 DP2000	0,090	0,11	0,13	0,15	0,18	0,20	80
N1	P1 T250D	0,14	0,17	0,20	0,24	0,28	0,32	310
N2	P1 T250D	0,14	0,17	0,20	0,24	0,28	0,32	200
N3	P1 T250D	0,14	0,17	0,20	0,24	0,28	0,32	135
N11	P1 T250D	0,14	0,17	0,20	0,24	0,28	0,32	260
S1	P1 T250D	0,070	0,085	0,10	0,12	0,14	0,16	34
S2	P1 T250D	0,070	0,085	0,10	0,12	0,14	0,16	25
S3	P1 T250D	0,065	0,080	0,095	0,11	0,13	0,15	25
S11	P1 T250D	0,080	0,10	0,12	0,14	0,16	0,18	65
S12	P1 T250D	0,080	0,10	0,12	0,14	0,16	0,18	50
S13	P1 T250D	0,070	0,085	0,10	0,12	0,14	0,16	39
H3	P1 T250D	0,046	0,055	0,065	0,075	0,090	0,10	60
H5	P1 T250D	0,070	0,085	0,10	0,12	0,13	0,15	110
H7	P1 T250D	0,046	0,055	0,065	0,075	0,090	0,10	60
H8	P1 T250D	0,050	0,065	0,075	0,090	0,10	0,12	110
H11	P1 T250D	0,070	0,085	0,10	0,12	0,13	0,15	140
H12	P1 T250D	0,070	0,085	0,10	0,12	0,13	0,15	230
H21	P1 T250D	0,050	0,065	0,075	0,090	0,10	0,12	110

SMG = Seco material group
f = mm/rev
v_c= m/min
All cutting data are start values

Cutting data – SD503 Cutting speed

SMG	v_c		
	DP2000	DP3000	T250D
P1	255	215	160
P2	245	210	155
P3	210	180	135
P4	230	190	120
P5	220	180	115
P6	250	200	130
P7	235	190	120
P8	220	180	115
P11	225	185	115
M1	—	215	135
M2	—	170	110
M3	—	130	85
M4	—	100	65
M5	—	80	55
K1	195	155	—
K2	170	135	—
K3	145	115	—
K4	135	110	—
K5	80	65	—
N1	—	360	310
N2	—	230	200
N3	—	155	135
N11	—	300	260
S1	—	—	34
S2	—	—	25
S3	—	—	25
S11	—	—	65
S12	—	—	50
S13	—	—	39
H3	—	60	60
H5	—	110	110
H7	—	60	60
H8	—	110	110
H11	—	145	140
H12	—	230	230
H21	—	110	110

SMG = Seco material group
v_c= m/min
All cutting data are start values

Cutting data – SD504 Ø17-60

SMG		f						v_c
		Ø17,00-19,49	Ø19,50-22,49	Ø22,50-28,49	Ø28,50-34,49	Ø34,50-44,49	Ø44,50-59,99	
P1	P1 DP2000	0,11	0,13	0,16	0,18	0,22	0,24	210
P2	P1 DP2000	0,050	0,065	0,085	0,10	0,12	0,14	205
P3	P2 DP3000	0,10	0,13	0,15	0,18	0,20	0,24	160
P4	P2 DP3000	0,10	0,13	0,15	0,17	0,20	0,24	165
P5	P2 DP3000	0,10	0,12	0,15	0,17	0,20	0,22	160
P6	P2 DP3000	0,10	0,12	0,14	0,17	0,19	0,22	180
P7	P2 DP3000	0,10	0,12	0,14	0,17	0,19	0,22	170
P8	P2 DP3000	0,10	0,13	0,15	0,18	0,20	0,24	160
P11	P2 DP3000	0,10	0,12	0,14	0,17	0,19	0,22	165
M1	P2 DP3000	0,11	0,14	0,16	0,19	0,22	0,26	185
M2	P2 DP3000	0,10	0,12	0,15	0,17	0,20	0,22	150
M3	P1 T250D	0,080	0,10	0,12	0,14	0,16	0,18	75
M4	P1 T250D	0,070	0,085	0,10	0,12	0,14	0,16	55
M5	P1 T250D	0,070	0,085	0,10	0,12	0,14	0,16	46
K1	P2 DP2000	0,11	0,14	0,16	0,19	0,22	0,26	165
K2	P2 DP2000	0,10	0,12	0,15	0,17	0,20	0,22	140
K3	P2 DP2000	0,10	0,12	0,15	0,17	0,20	0,22	120
K4	P2 DP2000	0,10	0,12	0,15	0,17	0,20	0,22	115
K5	P2 DP2000	0,090	0,11	0,13	0,15	0,18	0,20	70
N1	P1 T250D	0,14	0,17	0,20	0,24	0,28	0,32	270
N2	P1 T250D	0,14	0,17	0,20	0,24	0,28	0,32	175
N3	P1 T250D	0,14	0,17	0,20	0,24	0,28	0,32	115
N11	P1 T250D	0,14	0,17	0,20	0,24	0,28	0,32	230
S1	P1 T250D	0,070	0,085	0,10	0,12	0,14	0,16	29
S2	P1 T250D	0,070	0,085	0,10	0,12	0,14	0,16	22
S3	P1 T250D	0,065	0,080	0,095	0,11	0,13	0,15	22
S11	P1 T250D	0,080	0,10	0,12	0,14	0,16	0,18	55
S12	P1 T250D	0,080	0,10	0,12	0,14	0,16	0,18	44
S13	P1 T250D	0,070	0,085	0,10	0,12	0,14	0,16	34
H3	P1 T250D	0,046	0,055	0,065	0,075	0,090	0,10	50
H5	P1 T250D	0,070	0,085	0,10	0,12	0,13	0,15	95
H7	P1 T250D	0,046	0,055	0,065	0,075	0,090	0,10	50
H8	P1 T250D	0,050	0,065	0,075	0,090	0,10	0,12	95
H11	P1 T250D	0,070	0,085	0,10	0,12	0,13	0,15	125
H12	P1 T250D	0,070	0,085	0,10	0,12	0,13	0,15	200
H21	P1 T250D	0,050	0,065	0,075	0,090	0,10	0,12	95

SMG = Seco material group
f = mm/rev
v_c= m/min
All cutting data are start values

Cutting data – SD504 Cutting speed

SMG	v_c		
	DP2000	DP3000	T250D
P1	210	190	140
P2	205	185	135
P3	180	160	120
P4	195	165	105
P5	185	160	100
P6	210	180	110
P7	195	170	105
P8	185	160	100
P11	190	165	100
M1	—	185	120
M2	—	150	95
M3	—	115	75
M4	—	85	55
M5	—	70	46
K1	165	135	—
K2	140	120	—
K3	120	100	—
K4	115	95	—
K5	70	55	—
N1	—	315	270
N2	—	205	175
N3	—	135	115
N11	—	265	230
S1	—	—	29
S2	—	—	22
S3	—	—	22
S11	—	—	55
S12	—	—	44
S13	—	—	34
H3	—	55	50
H5	—	100	95
H7	—	55	50
H8	—	100	95
H11	—	125	125
H12	—	205	200
H21	—	100	95

SMG = Seco material group
v_c= m/min
All cutting data are start values

Cutting data – SD505 Ø19-45

SMG		f				v_c
		Ø19,00-22,49	Ø22,50-28,49	Ø28,50-34,49	Ø34,50-45,00	
P1	P2 DP3000	0,13	0,16	0,18	0,22	170
P2	P2 DP3000	0,065	0,085	0,10	0,12	165
P3	P2 DP3000	0,13	0,15	0,18	0,20	140
P4	P2 DP3000	0,13	0,15	0,17	0,20	150
P5	P2 DP3000	0,12	0,15	0,17	0,20	140
P6	P2 DP3000	0,12	0,14	0,17	0,19	160
P7	P2 DP3000	0,12	0,14	0,17	0,19	150
P8	P2 DP3000	0,13	0,15	0,18	0,20	140
P11	P2 DP3000	0,12	0,14	0,17	0,19	145
M1	P2 DP3000	0,14	0,16	0,19	0,22	165
M2	P2 DP3000	0,12	0,15	0,17	0,20	135
M3	P1 T250D	0,10	0,12	0,14	0,16	65
M4	P1 T250D	0,085	0,10	0,12	0,14	49
M5	P1 T250D	0,085	0,10	0,12	0,14	41
K1	P2 DP3000	0,14	0,16	0,19	0,22	120
K2	P2 DP3000	0,12	0,15	0,17	0,20	105
K3	P2 DP3000	0,12	0,15	0,17	0,20	90
K4	P2 DP3000	0,12	0,15	0,17	0,20	85
K5	P2 DP3000	0,11	0,13	0,15	0,18	50
N1	P1 T250D	0,17	0,20	0,24	0,28	240
N2	P1 T250D	0,17	0,20	0,24	0,28	155
N3	P1 T250D	0,17	0,20	0,24	0,28	100
N11	P1 T250D	0,17	0,20	0,24	0,28	200
S1	P1 T250D	0,085	0,10	0,12	0,14	26
S2	P1 T250D	0,085	0,10	0,12	0,14	20
S3	P1 T250D	0,080	0,095	0,11	0,13	20
S11	P1 T250D	0,10	0,12	0,14	0,16	50
S12	P1 T250D	0,10	0,12	0,14	0,16	39
S13	P1 T250D	0,085	0,10	0,12	0,14	30
H3	P1 T250D	0,055	0,065	0,075	0,090	46
H5	P1 T250D	0,085	0,10	0,12	0,13	85
H7	P1 T250D	0,055	0,065	0,075	0,090	46
H8	P1 T250D	0,065	0,075	0,090	0,10	85
H11	P1 T250D	0,085	0,10	0,12	0,13	110
H12	P1 T250D	0,085	0,10	0,12	0,13	175
H21	P1 T250D	0,065	0,075	0,090	0,10	85

SMG = Seco material group
f = mm/rev
v_c= m/min
All cutting data are start values

Cutting data – SD505 Cutting speed

SMG	v_c		
	DP2000	DP3000	T250D
P1	180	170	125
P2	175	165	120
P3	150	140	105
P4	165	150	90
P5	155	140	90
P6	175	160	100
P7	165	150	95
P8	155	140	90
P11	160	145	90
M1	—	165	105
M2	—	135	85
M3	—	105	65
M4	—	75	49
M5	—	65	41
K1	140	120	—
K2	120	105	—
K3	100	90	—
K4	100	85	—
K5	60	50	—
N1	—	285	240
N2	—	185	155
N3	—	120	100
N11	—	235	200
S1	—	—	26
S2	—	—	20
S3	—	—	20
S11	—	—	50
S12	—	—	39
S13	—	—	30
H3	—	48	46
H5	—	90	85
H7	—	48	46
H8	—	90	85
H11	—	115	110
H12	—	180	175
H21	—	90	85

SMG = Seco material group
v_c= m/min
All cutting data are start values

Cutting data – SD542 Ø60-85

SMG		f		v_c
		Ø60,00-65,00	Ø70,00-85,00	
P1	P2 DP3000	0,18	0,22	230
P2	P2 DP3000	0,10	0,12	225
P3	P2 DP3000	0,18	0,20	195
P4	P2 DP3000	0,17	0,20	205
P5	P2 DP3000	0,17	0,20	195
P6	P2 DP3000	0,17	0,19	220
P7	P2 DP3000	0,17	0,19	205
P8	P2 DP3000	0,18	0,20	195
P11	P2 DP3000	0,17	0,19	200
M1	P2 DP3000	0,19	0,22	230
M2	P2 DP3000	0,17	0,20	185
M3	P1 T250D	0,14	0,16	90
M4	P1 T250D	0,12	0,14	70
M5	P1 T250D	0,12	0,14	55
K1	P2 DP3000	0,19	0,22	165
K2	P2 DP3000	0,17	0,20	145
K3	P2 DP3000	0,17	0,20	120
K4	P2 DP3000	0,17	0,20	115
K5	P2 DP3000	0,15	0,18	70
N1	P1 T250D	0,24	0,28	335
N2	P1 T250D	0,24	0,28	215
N3	P1 T250D	0,24	0,28	145
N11	P1 T250D	0,24	0,28	285
S1	P1 T250D	0,12	0,14	37
S2	P1 T250D	0,12	0,14	27
S3	P1 T250D	0,11	0,13	27
S11	P1 T250D	0,14	0,16	70
S12	P1 T250D	0,14	0,16	55
S13	P1 T250D	0,12	0,14	43
H3	P1 T250D	0,075	0,090	65
H5	P1 T250D	0,12	0,13	120
H7	P1 T250D	0,075	0,090	65
H8	P1 T250D	0,090	0,10	120
H11	P1 T250D	0,12	0,13	155
H12	P1 T250D	0,12	0,13	245
H21	P1 T250D	0,090	0,10	120

SMG = Seco material group
f = mm/rev
v_c= m/min
All cutting data are start values

Cutting data – SD542 Cutting speed

SMG	v_c		
	DP2000	DP3000	T250D
P1	280	230	175
P2	270	225	170
P3	235	195	145
P4	255	205	130
P5	245	195	125
P6	275	220	140
P7	260	205	130
P8	245	195	125
P11	250	200	125
M1	—	230	150
M2	—	185	120
M3	—	140	90
M4	—	105	70
M5	—	90	55
K1	215	165	—
K2	190	145	—
K3	160	120	—
K4	150	115	—
K5	90	70	—
N1	—	390	335
N2	—	250	215
N3	—	165	145
N11	—	325	285
S1	—	—	37
S2	—	—	27
S3	—	—	27
S11	—	—	70
S12	—	—	55
S13	—	—	43
H3	—	65	65
H5	—	120	120
H7	—	65	65
H8	—	120	120
H11	—	155	155
H12	—	250	245
H21	—	120	120

SMG = Seco material group
v_c= m/min
All cutting data are start values

Cutting data – SD572 Ø15-52

SMG		f						v_c
		Ø15,00-17,00	Ø18,00-20,00	Ø21,00-24,00	Ø25,00-32,00	Ø33,00-36,00	Ø37,00-52,00	
P1	85 DP3000	0,030	0,036	0,042	0,050	0,060	0,070	310
P2	85 DP3000	0,030	0,036	0,044	0,055	0,060	0,070	305
P3	86 DP3000	0,10	0,12	0,13	0,16	0,17	0,20	260
P4	86 DP3000	0,10	0,12	0,13	0,15	0,17	0,19	230
P5	86 DP3000	0,10	0,11	0,13	0,15	0,17	0,19	220
P6	86 DP3000	0,10	0,11	0,13	0,15	0,16	0,19	245
P7	86 DP3000	0,10	0,11	0,13	0,15	0,16	0,19	235
P8	86 DP3000	0,10	0,12	0,13	0,16	0,17	0,20	220
P11	86 DP3000	0,10	0,11	0,13	0,15	0,16	0,19	225
M1	86 DP3000	0,11	0,13	0,14	0,16	0,18	0,20	235
M2	86 DP3000	0,10	0,11	0,13	0,15	0,17	0,19	190
M3	85 DP3000	0,080	0,090	0,10	0,12	0,13	0,15	145
M4	85 DP3000	0,070	0,080	0,090	0,10	0,12	0,13	110
M5	85 DP3000	0,070	0,080	0,090	0,10	0,12	0,13	90
K1	86 DP3000	0,11	0,13	0,14	0,16	0,18	0,20	180
K2	86 DP3000	0,10	0,11	0,13	0,15	0,17	0,19	155
K3	86 DP3000	0,10	0,11	0,13	0,15	0,17	0,19	130
K4	86 DP3000	0,10	0,11	0,13	0,15	0,17	0,19	125
K5	86 DP3000	0,090	0,10	0,12	0,13	0,15	0,17	75
S1	85 DP3000	0,070	0,080	0,090	0,10	0,12	0,13	40
S2	85 DP3000	0,070	0,080	0,090	0,10	0,12	0,13	30
S3	85 DP3000	0,065	0,075	0,085	0,095	0,11	0,13	30
S11	85 DP3000	0,080	0,090	0,10	0,12	0,13	0,15	80
S12	85 DP3000	0,080	0,090	0,10	0,12	0,13	0,15	60
S13	85 DP3000	0,070	0,080	0,090	0,10	0,12	0,13	47
H3	86 DP3000	0,044	0,050	0,060	0,065	0,075	0,085	80
H5	86 DP3000	0,070	0,080	0,090	0,10	0,11	0,13	150
H7	86 DP3000	0,044	0,050	0,060	0,065	0,075	0,085	80
H8	86 DP3000	0,050	0,060	0,065	0,080	0,085	0,10	150
H11	86 DP3000	0,070	0,080	0,090	0,10	0,11	0,13	190
H12	86 DP3000	0,070	0,080	0,090	0,10	0,11	0,13	310
H21	86 DP3000	0,050	0,060	0,065	0,080	0,085	0,10	150

SMG = Seco material group
f = mm/rev
v_c= m/min
All cutting data are start values

Cutting data – SD572 Cutting speed

SMG	v_c
	DP2000
P1	375
P2	365
P3	315
P4	280
P5	265
P6	300
P7	280
P8	265
P11	275
M1	285
M2	230
M3	175
M4	130
M5	110
K1	215
K2	185
K3	160
K4	150
K5	90
S1	—
S2	—
S3	—
S11	—
S12	—
S13	—
H3	80
H5	150
H7	80
H8	150
H11	190
H12	310
H21	150

SMG = Seco material group
v_c = m/min
All cutting data are start values

Cutting data – SD602 Ø60-160

SMG		f					v_c
		Ø60,00-69,99	Ø70,00-91,99	Ø92,00-110,99	Ø111,00-134,99	Ø135,00-160,00	
P1	P2 DP3000	0,14	0,17	0,18	0,19	0,18	190
P2	P2 DP3000	0,075	0,090	0,095	0,10	0,095	185
P3	P2 DP3000	0,14	0,16	0,17	0,18	0,17	160
P4	P2 DP3000	0,14	0,16	0,17	0,18	0,17	165
P5	P2 DP3000	0,13	0,16	0,16	0,17	0,16	160
P6	P2 DP3000	0,13	0,15	0,16	0,17	0,16	180
P7	P2 DP3000	0,13	0,15	0,16	0,17	0,16	170
P8	P2 DP3000	0,14	0,16	0,17	0,18	0,17	160
P11	P2 DP3000	0,13	0,15	0,16	0,17	0,16	165
M1	P2 DP3000	0,15	0,17	0,18	0,19	0,18	185
M2	P2 DP3000	0,13	0,16	0,16	0,17	0,16	150
M3	P1 DP3000	0,11	0,13	0,13	0,14	0,13	115
M4	P1 DP3000	0,095	0,11	0,12	0,12	0,12	85
M5	P1 DP3000	0,095	0,11	0,12	0,12	0,12	70
K1	P2 DP3000	0,15	0,17	0,18	0,19	0,18	135
K2	P2 DP3000	0,13	0,16	0,16	0,17	0,16	120
K3	P2 DP3000	0,13	0,16	0,16	0,17	0,16	100
K4	P2 DP3000	0,13	0,16	0,16	0,17	0,16	95
K5	P2 DP3000	0,12	0,14	0,15	0,15	0,15	55
H3	P2 DP3000	0,060	0,070	0,075	0,075	0,075	55
H5	P2 DP3000	0,090	0,11	0,11	0,12	0,11	100
H7	P2 DP3000	0,060	0,070	0,075	0,075	0,075	55
H8	P2 DP3000	0,070	0,080	0,085	0,090	0,085	100
H11	P2 DP3000	0,090	0,11	0,11	0,12	0,11	125
H12	P2 DP3000	0,090	0,11	0,11	0,12	0,11	205
H21	P2 DP3000	0,070	0,080	0,085	0,090	0,085	100

SMG = Seco material group
f = mm/rev
v_c= m/min
All cutting data are start values

Cutting data – SD602 Cutting speed

SMG	v_c
	T250D
P1	140
P2	135
P3	120
P4	105
P5	100
P6	110
P7	105
P8	100
P11	100
M1	120
M2	95
M3	75
M4	55
M5	46
K1	—
K2	—
K3	—
K4	—
K5	—
H3	50
H5	95
H7	50
H8	95
H11	125
H12	200
H21	95

SMG = Seco material group
v_c= m/min
All cutting data are start values

Custom design – No waiting for quotations! Price and delivery time available instantly!

A well defined strategy has been created for the total process for custom-made drills from quotation to finished drill. You can now design your own customised Perfomax® drill using the Custom Design software.

The concept gives you a number of advantages:

- No waiting for quotations! price and delivery time available instantly
- Directly visualises your needs. No risk of misunderstandings
- Short delivery time

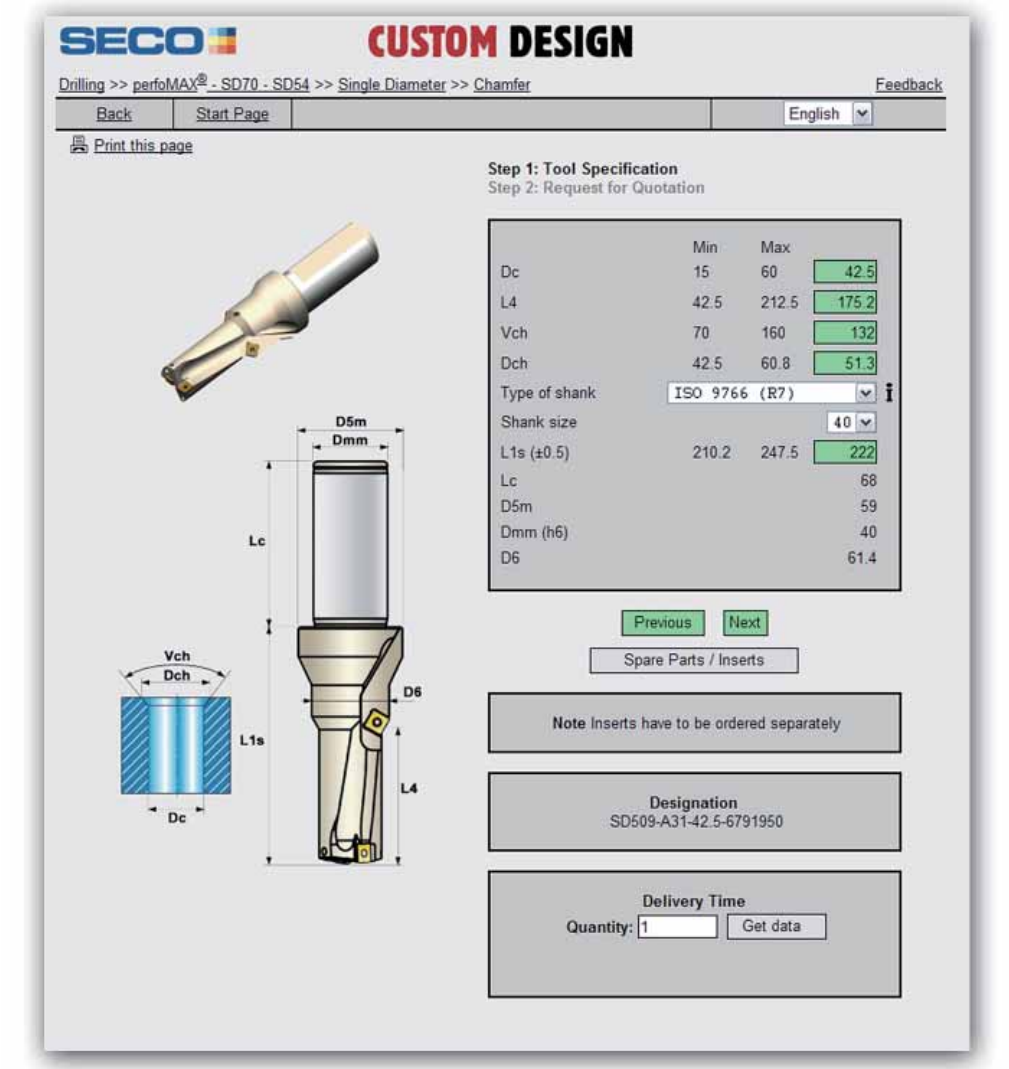

Please contact your local Seco representative for more information.

Different types of custom drills – Detailed information can be found in the Custom Design software

A1. Single diameter



A1. Drill dia 15-60



A1.Drill dia 60-110

A2. Reinforced



A3. Chamfer



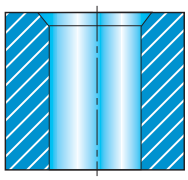

A4. Face



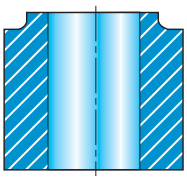

A5. Face with chamfer



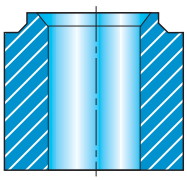

A6. Straight flutes



B1. Counterbore



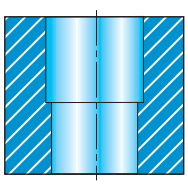

B2. Counterbore and chamfer



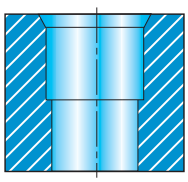

B2. Step



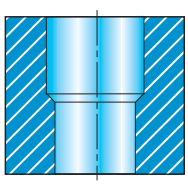

Different types of custom drills – Detailed information can be found in the Custom Design software

B4. Step and chamfer

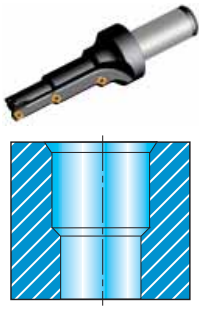

B5. Counterbore and chamfer

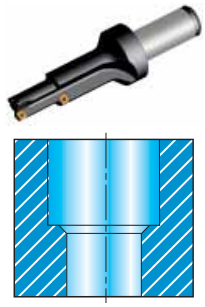

B6. Counterbore with chamfers

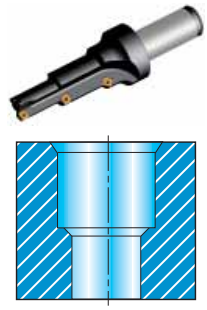

E1. Core drill single diameter



E2. Core drill reinforced



F1. Drill heads
(With pilot drill)



F2. Drill heads
(without pilot drill)



Machining data – Power consumption, coolant volume requirement and force graphs

The values in the graphs vary with e.g., cutting data, material, with a machine efficiency of 80%.
The graphs below are valid for Seco material group No. P5-P6 and cutting speed 200 m/min.

Feed force

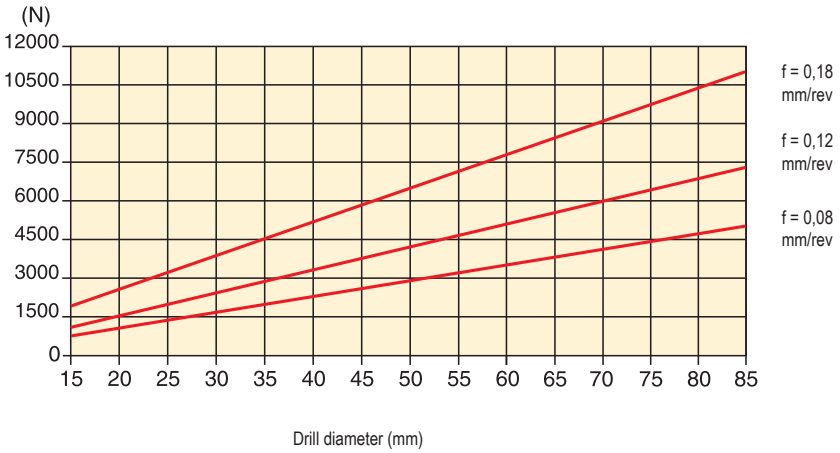

Net power consumption

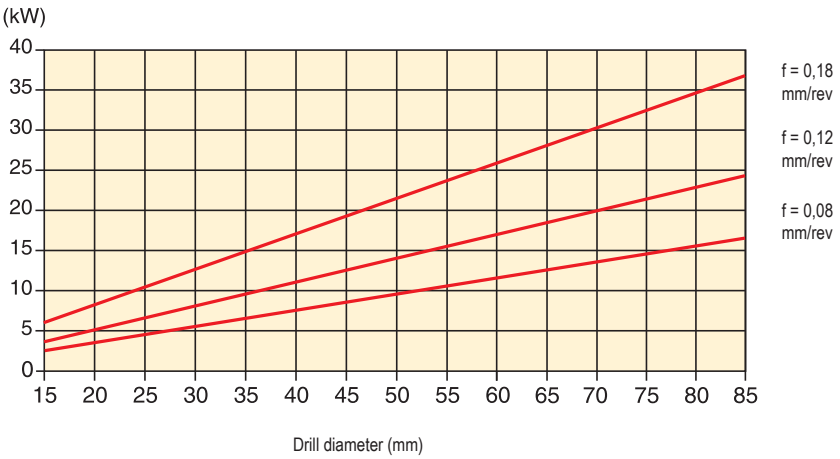

Drilling torque

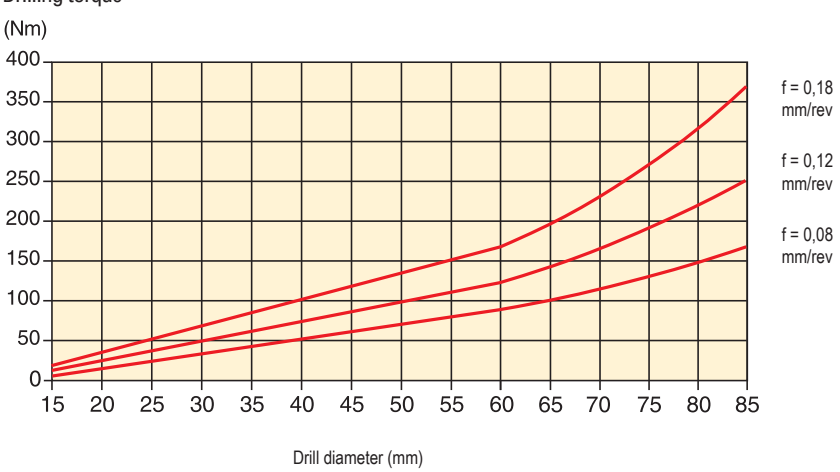

Machining data – Coolant volume requirement

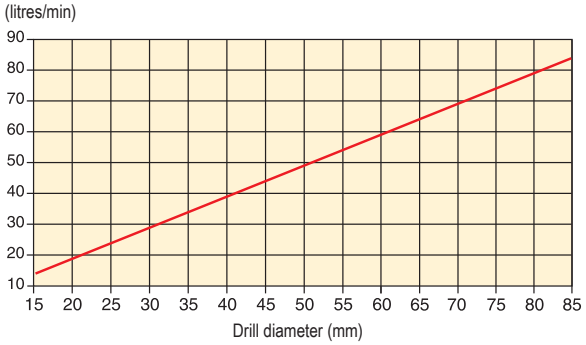

Coolant pressure requirement

Drilling depth	Recommended pressure (bar)		
	Drill diameter		
	15–25	> 25–40	> 40
< 3 x D	6	4,5	3
≥ 3 x D	12	9	6

Drilling of stacked materials

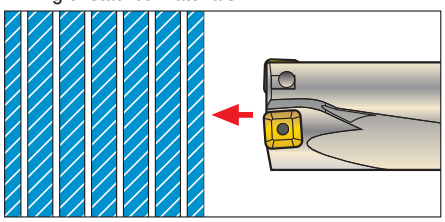

Drilling of stacked materials with no air gaps between the layers, (max 0,2 mm), can be done with SD503 3 x D and the SD542 2,5 x D drill. The component must be securely fixed so no flexing occurs when breaking through each layer.

Cutting data and insert recommendations for drilling of stacked materials

Insert geometry:		Carbide grade:	
Centre insert:	SPGX-C1	Centre insert:	T400D
Periph insert:	SCGX-P2	Periph insert:	DP3000
Cutting speed:	See recommendations for DP3000 carbide grade		
Feed/rev:	See recommendations for P2 geometry		

If a problem occurs when breaking through each layer, reduce the feed/rev by 30-50%.

Caution!
The disc produced when the drill breaks through can be ejected at high speed when using the drill as a stationary tool, (rotating workpiece).
It is most important to ensure that the machine is adequately guarded to ensure operator safety.

Set up

Hole diameter adjustment and set-up recommendation

The insert drills can be displaced off-centre to achieve a smaller or larger hole diameter than the actual drill.
For measurement see 'Radial adjustment' in the tool data table in the catalogue pages.

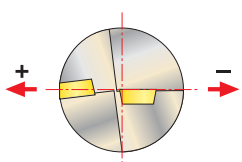

Rotating

Seco's adjustable holder is recommended for precision hole diameter IT10 setting when using SD502 and SD503, 3 x D as rotating drills.

Stationary

When mounting the drill make sure the cutting edges are parallel with the guide ways of the cross slide and that the drill centre line and workpiece centre line align. To achieve a larger hole diameter, displace the drill so that the periphery insert moves away from the workpiece centre line.

Machining data – Power consumption, coolant volume requirement and force graphs

The values in the graphs vary with e.g., cutting data, material, with a machine efficiency of 80%.
The graphs below are valid for Seco material group No. P5-P6 and cutting speed 200 m/min.

Feed force

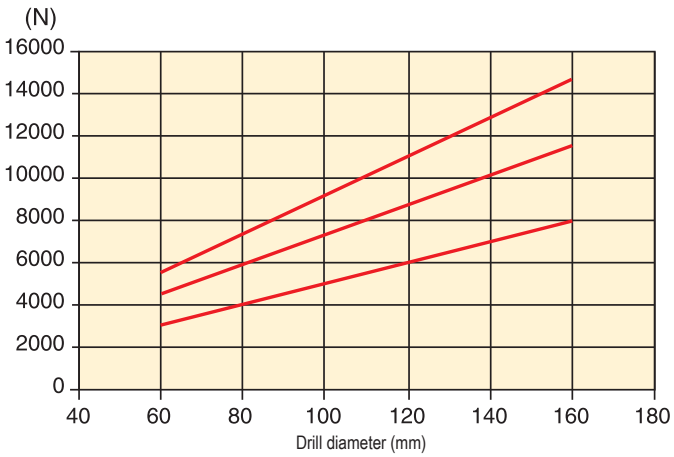

f = 0,18 mm/rev

f = 0,12 mm/rev

f = 0,08 mm/rev

Net power consumption

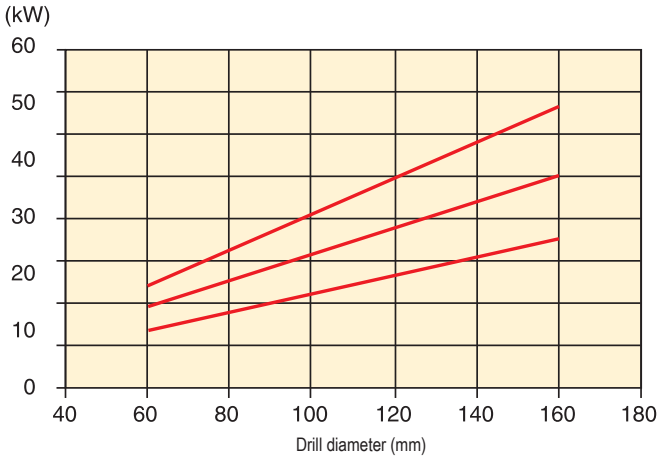

f = 0,18 mm/rev

f = 0,12 mm/rev

f = 0,08 mm/rev

Drilling torque

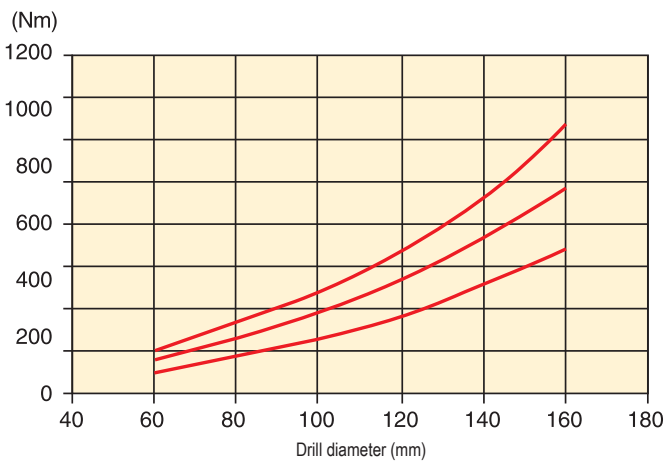

f = 0,18 mm/rev

f = 0,12 mm/rev

f = 0,08 mm/rev

Machining data – Coolant volume requirement

(litres/min)

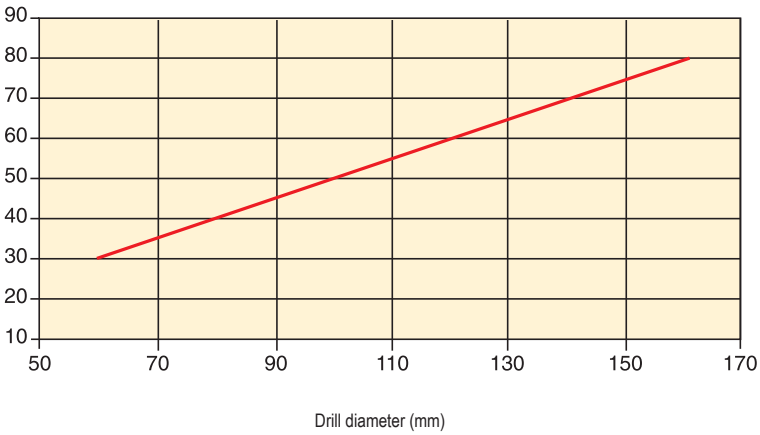

Methods

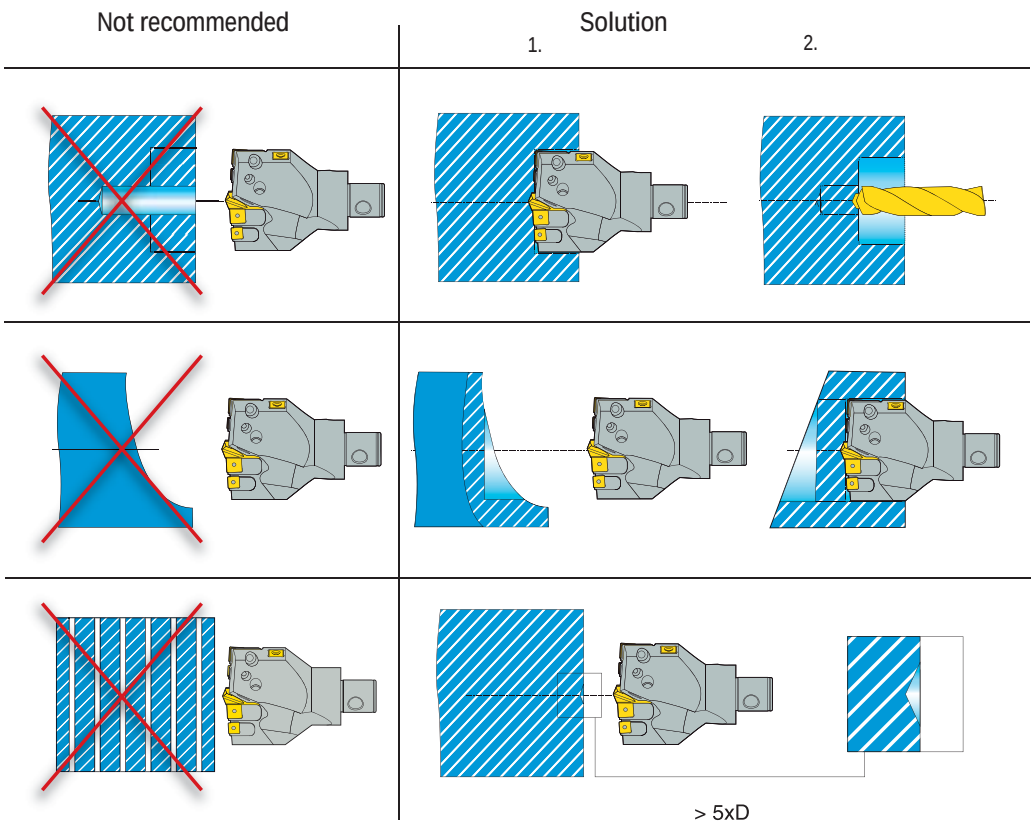

Versatility

Applications:

1. Hole with angled entrance
2. Boring
3. Drilling across an existing hole
4. Drilling and plunging
5. Drilling and milling countersink by circular interpolation
6. Plunging

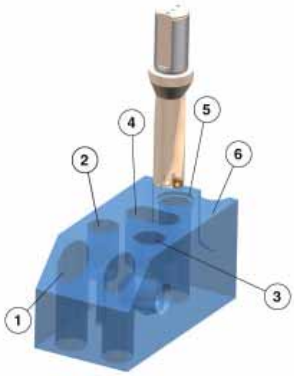

Recommendations:

- 2 x D and 3 x D drills (SD502, SD503)
- Reduce the feed ~ 50% when the drill is not fully engaged
- Use grade DP3000
- Use -P2 chipbreaker

Multiple choice in non rotating operations:

1. Drilling
2. Boring / Conical hole
3. Chamfering

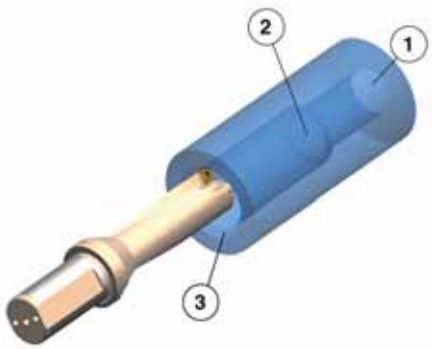

Troubleshooting

Vibrations

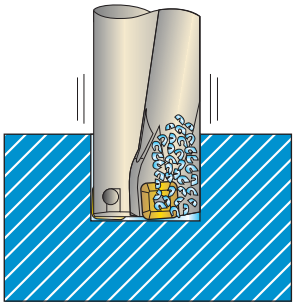

- Check mounting of drill
- Check mounting of workpiece
- Increase feed. If a very soft material, reduce feed and increase speed
- Reduce the cutting speed

Insufficient torque

- Reduce feed
- Choose a geometry with harder chipbreaking for lower feeds

Insufficient power

- Reduce cutting speed
- Reduce feed
- Choose a geometry with harder chipbreaking for lower feeds. (SCGX-P1)

Chip Jamming Problems

Chip jamming problems due to long chips

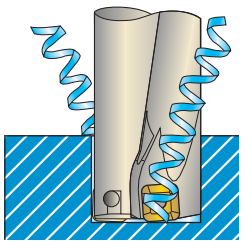

- Increase feed. If a very soft material, reduce feed and increase speed
- Choose a geometry with harder chipbreaking for lower feeds. (SCGX-P1)

Chip jamming problems despite short chips

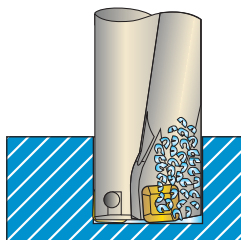

- Increase coolant pressure/volume
- Reduce cutting speed

Rapid flank wear on pilot drill

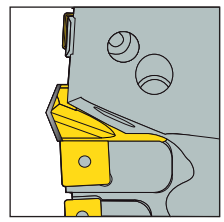

- Reduce the cutting speed
- Increase coolant concentration

Tool life problems

Chipping of periphery insert



- Reduce entrance feed
- Choose a tougher grade
- Choose a geometry with softer chipbreaking for higher feeds (SCGX-P2)
- Reduce feed
- Reduce cutting speed

Chipping of centre insert



- Check mounting of drill
- Check mounting of workpiece
- Reduce entrance feed
- Increase feed
- Reduce cutting speed

Too fast flank wear on periphery insert



- Reduce cutting speed
- Increase coolant pressure volume
- Choose a more wear resistant grade





Rotary coolant inducers and adjustable holders with Graflex® back end

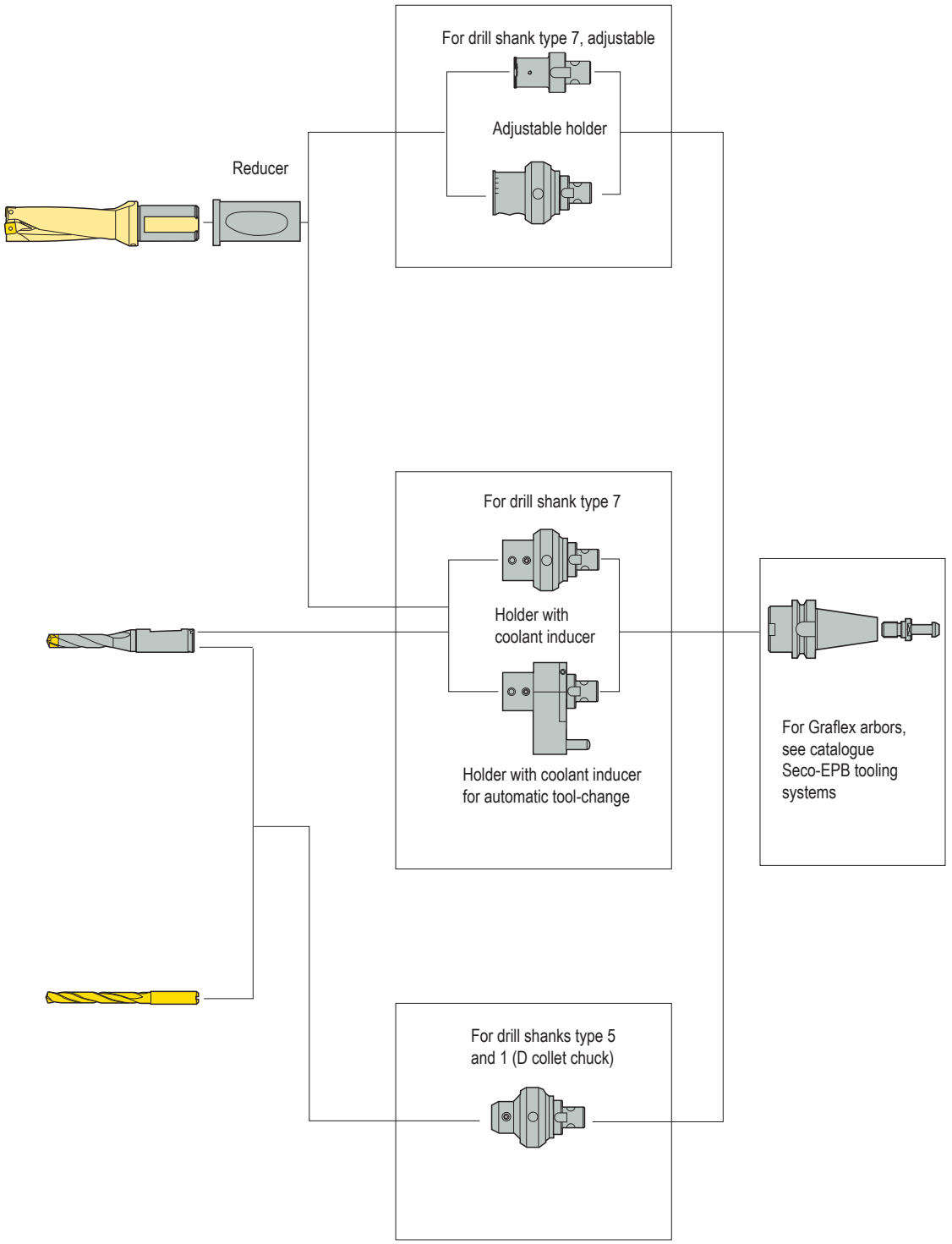

Note: When rotary coolant inducing or adjusting are not required, classic holders are suitable (e.g. Weldon for type 7 / Whistle Notch for type 5 / Shrinkfit hydraulic-collet for type 1), see catalogue Seco-EPB tooling systems.

EPB 6100 – Adjustable drill holders, for type 7 drill shanks – ISO 9766 – Metric

Graflex®



- For Perfomax™ drills
- Adjustable from -0,3 mm to +0,8 mm on diameter

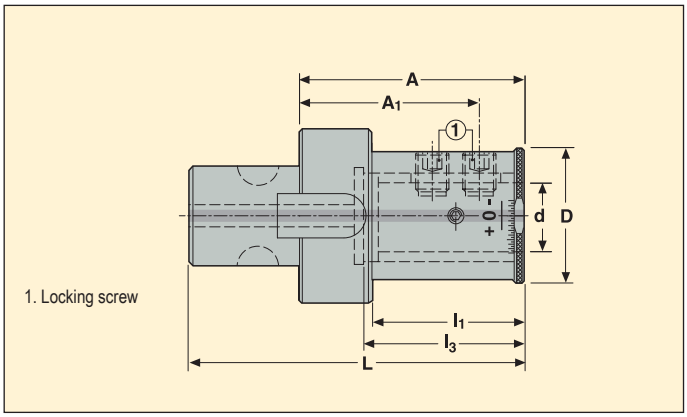

1. Locking screw

Graflex shank size	For drill shank type	d mm	Part No.	Dimensions in mm A	A1	D	L	l1	l3	Balancing	KG
G6											
	R7	25	BM061610025	70	55	49	110	54	54	–	1,12
	R7	32	BM061610032	85	70	71	125	–	60,5	–	2,09
	R7	40	BM061610040	85	70	81	125	–	60,5	–	2,38

Spare parts

For d mm	Locking screw
25	950AF1210014
32	950AF1210020
40	950AF1210020

Accessories*

Key	Reducing sleeve	Reducing sleeve 2
H06-4	–	–
H06-4	05B61003225	–
H06-4	05B61004025	05B61004032

* Accessories not included in delivery.
Please check availability in current price and stock-list.

EPB 6101 – Adjustable drill holders, for type 7 drill shanks - Inch

Graflex®



- For Perfomax™ drills
- Adjustable from -0,3 mm to +0,8 mm on diameter

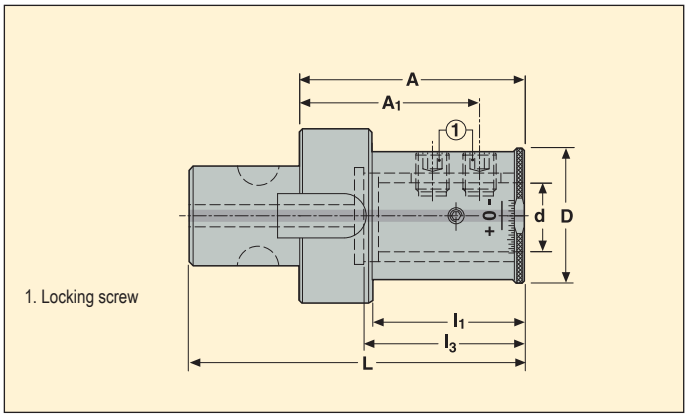

1. Locking screw

Graflex shank size	For drill shank type	d inch	Part No.	Dimensions in mm A	A1	D	L	l1	l3	Balancing	KG
G6											
	R7	1.00	BM061610125	70	55	49	110	54	54,5	–	1,11
	R7	1.25	BM061610131	85	70	71	125	–	60,5	–	2,09
	R7	1.50	BM061610138	85	70	81	125	–	60,5	–	2,45

Spare parts

For d inch	Locking screw
1.00	950AF1210014
1.25	950AF1210020
1.50	950AF1210020

Accessories*

Key	Reducing sleeve 2
H06-4	–
H06-4	–
H06-4	05B61013831

* Accessories not included in delivery.
Please check availability in current price and stock-list.

EPB 6181/A0 – Rotary coolant inducers, automatic tool change, for type 7 drill shanks – ISO 9766 – Metric

Graflex®



- Filtration to 40 µm maximum required

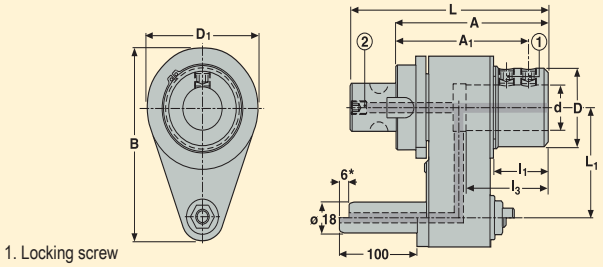

1. Locking screw
2. Plug

* Stroke

Graflex shank size	For drill shank type	d mm	Part No.	Dimensions in mm									Max pressure bar	Max rpm	KG
				A	A_1	D	D_1	L	L_1	l_1	l_3	B			
G5	R7	25	BSM0516181255A0	105	90	39,5	60	135	80	42	54	127,5	20	6000	1,87
G6	R7	32	BSM0616181326A0	110	95	55,0	90	150	80	42	58	142,5	20	4000	3,38
	R7	40	BSM0616181406A0	115	100	63,0	90	155	80	47	65	142,5	20	4000	3,44

Spare parts

For d mm	Plug	Locking screw	Coolant tube
25	950A0810	19X60841208	EU9023001
32	950A1012	19X608412	EU9023001
40	950A1012	19X608412	EU9023001

Accessories*

Key	Reducing sleeve	Reducing sleeve 2	Socket
H06-4	–	–	E99000
H06-4	05B61003225	–	E99000
H06-4	05B61004025	05B61004032	E99000

* Accessories not included in delivery.
Please check availability in current price and stock-list.

EPB 6181/00 – Rotary coolant inducers, manual tool change, for type 7 drill shanks – ISO 9766 – Metric

Graflex®



- Filtration to 40 µm maximum required

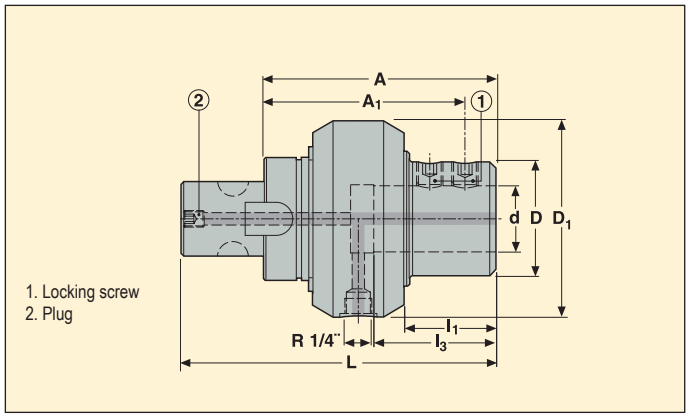

Graflex shank size	For drill shank type	d mm	Part No.	Dimensions in mm A	A1	D	D1	L	l1	l3	Max pressure bar	Max rpm	Balancing	KG
G5														
	R7	25	BSM051618125100	105	90	39,5	75	135	42	54	20	6000	–	1,4
G6														
	R7	32	BSM061618132200	110	95	55,0	95	150	42	58	20	4000	–	2,74
	R7	40	BSM061618140200	115	100	63,0	95	155	47	65	20	4000	–	2,8

Spare parts

For d mm	Plug	Locking screw
25	950A0810	19X60841208
32	950A1012	19X608412
40	950A1012	19X608412

Accessories*

Key	Reducing sleeve	Reducing sleeve 2
H06-4	–	–
H06-4	05B61003225	–
H06-4	05B61004025	05B61004032

* Accessories not included in delivery.
Please check availability in current price and stock-list.

EPB 6183/00 – Rotary coolant inducers, manual tool change, for type 7 drill shanks – Inch

Graflex®



- Filtration to 40 µm maximum required

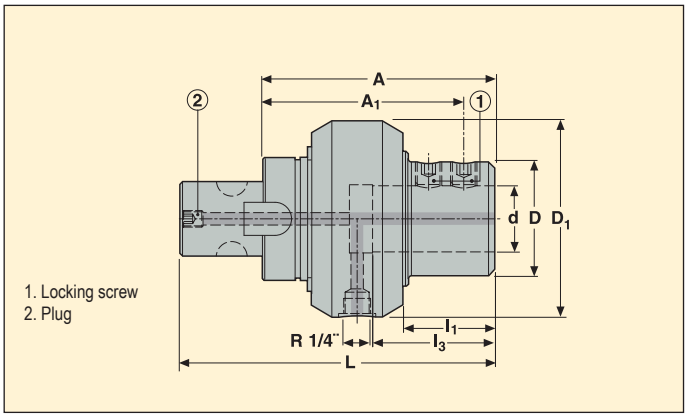

1. Locking screw
2. Plug

Graflex shank size	For drill shank type	d inch	Part No.	Dimensions in mm A	A1	D	D1	L	l1	l3	Max pressure bar	Max rpm	Balancing	KG
G5														
	R7	1.00	BSM051618325100	105,4	90,4	39,5	75	135,4	42,4	54	20	6000	–	1,4
G6														
	R7	1.25	BSM061618331200	110,5	95,5	55,0	95	150,5	42,4	58	20	4000	–	2,74
	R7	1.50	BSM061618338200	115,5	100,5	63,0	95	155,5	47,5	65	20	4000	–	2,87

Spare parts

For d inch	Plug	Locking screw
1.00	950A0810	19X60841208
1.25	950A1012	19X608412
1.50	950A1012	19X608412

Accessories*

Key	Reducing sleeve	Reducing sleeve 2
H06-4	–	–
H06-4	05B61013125	–
H06-4	05B61013825	05B61013831

* Accessories not included in delivery.
Please check availability in current price and stock-list.



Range overview

Threading	∅ Range	Length
Threadmaster™  Pages 260-264	M4-M20	~ 2–3 x D
R396.18/19  Pages 265-266	14 ≤	~ 2 - 3.5 x D
Threadmaster™ Taps  Pages 283-314	M2-M36	~ 1,5–3,5 x D

Versatile & Specific

Thread milling and Tapping – Choice of tool

Product Strategy

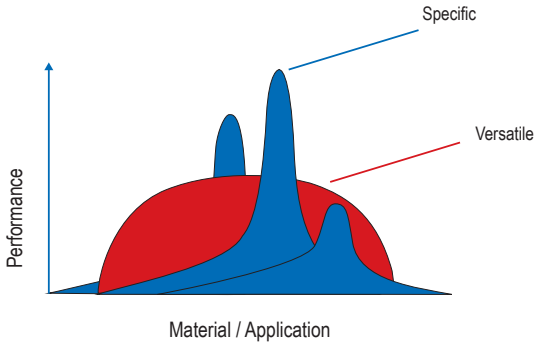

Continuous research and development of better materials, coatings and optimal geometries help fulfil customer´s requirements. Our product strategy is to provide the market with versatile first choice tools and specific optimized solutions for threading.

Product Assortment

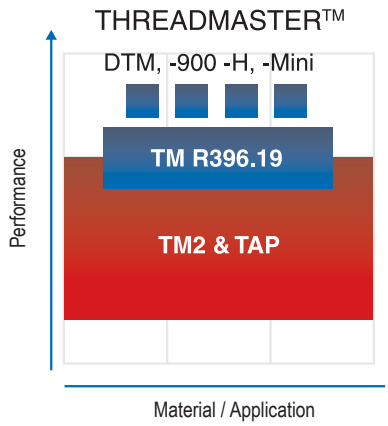

Thread milling – Choice of cutter, inserts and cutting data
Solid carbide cutter – Threadmaster™ and Threadmaster™2

1. General

The same cutter can be used for machining both right and left hand threads. Metric and UN versions are only for internal threading. The remaining of the range can be used for both external and internal threading.

- The cutters are regrindable.

2. Select cutter diameter

Look up the pages with the Threadmaster programmes

- Look up the column for the required thread type.
- Look up the required pitch.
- When more alternatives are available note that:

- Smaller cutter diameter allows smaller threading diameter (minimum thread diameter is found in the designation).

- Larger cutter diameter allows larger threading depth (maximum threading depth is 2 x cutter diameter, D_c).

- With Threadmaster2 also 3 x D is available.

Note: when using Threadmaster2 additional orbital cuts have to be done since a_p has a limit of 3 pitch.

3. Selection of cutter

TM: Basic choice

- TM...-900: Choice for steel and stainless steel with tensile strength > 900 N/mm^2
- TM...-H: Choice for hardened steel with hardness 45-60 HRC.
- DTM: Drill, thread and chamfer with same tool. To be used in aluminium and cast iron.

4. Select cutting data

- Use the tables beginning on page 616 to classify the workpiece material into a SMG (Seco Material Group).
- Cutting speed recommendations are found on the cutting data page for Threadmaster.
- Feed per tooth (= flute) recommendations are found on the cutting data page for Threadmaster.
- Formulae for cutting data calculation are on page 257

For best performance use the ”Seco Threading Wizard” software (available at www.secotools.com/customerzone).

5. Machining methods

Helical interpolation must be used to create the pitch.

- Clockwise or counterclockwise feed direction can be used depending on thread type and machining method (right or left hand), external or internal thread.
- Climb milling is recommended.
- Coolant supply is recommended. Except when threading hardened material.
- Special machining recommendations for certain workpiece materials are found on the cutting data page for Threadmaster.

Feed recommendations

Threadmaster™:

- Feed recommendations for TM-M4X0.7ISO-6R1 except for TM-Mini, that recommendation is for TM-M1.0X0.25ISO-3R1-H and only a start value
- For best performance use the ”Seco Threading Wizard” software (available at www.secotools.com/customerzone)
- All feed are related to the centre of the cutter and not the periphery
- In the entrance loop reduce feed by 50%. In the exit loop increase feed by 50%
- In the entrance and exit loop feed the cutter 15% of the pitch axially
- For free cutting steel, low alloy and ferritic steel, quench & temper steel, low to medium alloy stainless steels and austenitic cast irons, leave 0,05 mm in a_e for a finishing cut
- For high strength steels, martensitic and high alloy stainless steels, Ni-based superalloys and titanium alloys remove 2/3 of a_e in the first cut and the remaining 1/3 in the second cut
- For hardened steels remove 1/3 of a_e in the first cut, 1/3 of a_e in the second cut and the remaining 1/3 in the third cut
- For NPT and NPTF threads take the whole a_e in one cut
- Coolant is recommended (except when using -H in hardened materials)
- The Metric and UN thread mills are only for internal threads

TM-Mini:

- Left-hand cutting (M4)
- Do the entrance loop before entering into the workpiece

DTM:

- Use peck drilling

Threadmaster™ – Cutting data

SMG	TM		TM-900		TM-H		TM-MINI		TM2	
	f_z	v_c	f_z	v_c	f_z	v_c	f_z	v_c	f_z	v_c
P1	0,0034	145	—	—	—	—	—	—	0,0055	145
P2	0,0034	140	—	—	—	—	—	—	0,0055	140
P3	0,0032	120	0,0042	120	—	—	—	—	0,0050	120
P4	0,0032	105	0,0040	105	—	—	—	—	0,0050	105
P5	0,0032	100	0,0040	100	—	—	—	—	0,0050	100
P6	0,0030	115	0,0040	115	—	—	—	—	0,0050	115
P7	0,0030	110	0,0040	110	—	—	—	—	0,0050	110
P8	0,0032	100	0,0042	100	—	—	—	—	0,0050	100
P11	0,0030	105	0,0040	105	—	—	—	—	0,0050	105
M1	0,0034	100	0,0044	100	—	—	—	—	0,0055	100
M2	0,0032	80	0,0040	80	—	—	—	—	0,0050	80
M3	0,0024	60	0,0032	60	—	—	—	—	0,0040	60
M4	0,0022	47	0,0028	47	—	—	—	—	0,0034	47
M5	0,0022	39	0,0028	39	—	—	—	—	0,0034	39
K1	0,0055	145	—	—	—	—	—	—	0,0055	145
K2	0,0050	125	—	—	—	—	—	—	0,0050	125
K3	0,0050	105	—	—	—	—	—	—	0,0050	105
K4	0,0050	100	—	—	—	—	—	—	0,0050	100
K5	0,0046	60	—	—	—	—	—	—	0,0044	60
K6	0,0050	90	—	—	—	—	—	—	0,0050	90
K7	0,0046	80	—	—	—	—	—	—	0,0044	80
N1	0,0090	395	—	—	—	—	—	—	0,0070	395
N2	0,0090	255	—	—	—	—	—	—	0,0070	255
N3	0,0090	170	—	—	—	—	—	—	0,0070	170
N11	0,0090	225	—	—	—	—	—	—	0,0070	225
S1	0,0022	50	0,0028	20	—	—	—	—	0,0034	50
S2	0,0022	41	0,0028	15	—	—	—	—	0,0034	41
S3	0,0020	20	0,0026	10	—	—	—	—	0,0032	20
S11	0,0024	105	0,0032	40	—	—	—	—	0,0040	105
S12	0,0024	80	0,0032	31	—	—	—	—	0,0040	80
S13	0,0022	65	0,0028	24	—	—	—	—	0,0034	65
H3	—	—	—	—	0,0017	19	0,0026	11	—	—
H5	—	—	—	—	0,0026	35	0,0040	21	—	—
H7	—	—	—	—	0,0017	19	0,0026	11	—	—
H8	—	—	—	—	0,0019	35	0,0032	21	—	—
H11	—	—	—	—	0,0026	45	0,0040	26	—	—
H12	—	—	—	—	0,0026	75	0,0040	43	—	—
H21	—	—	—	—	0,0019	35	0,0032	21	—	—
H31	—	—	—	—	—	—	—	—	—	—

SMG = Seco Material Group
f_z = mm/tooth (mm/flute)
v_c = m/min
All cutting data are start values

Drilling Threadmaster™ – Cutting data, threadmilling

SMG	DTM	
	f_z	v_c
K1	0,0065	175
K2	0,0060	155
K3	0,0060	130
K4	0,0060	125
K5	0,0055	75
K6	0,0060	110
K7	0,0055	95
N1	0,0085	400
N2	0,0085	255
N3	0,0085	170
N11	0,0085	225

Drilling Threadmaster™ – Cutting data, drilling

SMG	f						v_c
	Ø3.01-5.0	Ø5.01-7.0	Ø7.01-9.0	Ø9.01-11.0	Ø11.01-13.0	Ø13.01-15.0	
K1	0,12	0,14	0,16	0,18	0,22	0,26	170
K2	0,11	0,12	0,14	0,16	0,20	0,24	150
K3	0,11	0,12	0,14	0,16	0,20	0,24	125
K4	0,11	0,12	0,14	0,16	0,20	0,24	120
K5	0,095	0,11	0,13	0,15	0,18	0,22	70
K6	0,11	0,12	0,14	0,16	0,20	0,24	105
K7	0,095	0,11	0,13	0,15	0,18	0,22	90
N1	0,15	0,17	0,20	0,22	0,28	0,32	390
N2	0,15	0,17	0,20	0,22	0,28	0,32	250
N3	0,15	0,17	0,20	0,22	0,28	0,32	165
N11	0,15	0,17	0,20	0,22	0,28	0,32	220

SMG = Seco Material Group
f_z = mm/tooth (mm/flute)
f = mm/rev
v_c= m/min
All cutting data are start values

Choice of cutter, inserts and cutting data

1. General

- The same cutter can be used for machining external and internal, right-hand and left-hand threads.

2. Select cutter diameter

- Look up the pages for thread milling cutters and choose a suitable diameter in the tool data table.
- The insert size varies with the cutter diameters. Check the available insert programme for the different sizes before deciding cutter diameter.
- For internal thread milling check the 'minimum thread diameter' table before deciding cutter diameter. This table shows the relation between the cutter diameter and the smallest thread diameter to be machined.

3. Select insert

- Look up the thread milling inserts pages and choose the required thread type in the correct insert size for the cutter. Choose the grade F30M/CP500 for general machining.

4. Select cutting data

Radial cutting depth

- Use the formulae to calculate the radial cutting depth (a_e). (See figures)

Feed rate

- Divide the radial cutting depth with the cutter diameter to get the actual cutter engagement percentage (a_e/D_c%). Use the cutting data table to get a feed per tooth recommendation.

Cutting speed

- Use the tables beginning at page 616 to classify the workpiece material into a SMG.
- Cutting speed recommendations (for 10% engagement) are in the basic cutting speed table in the catalogue.
- Maximum rpm that for safety reasons should never be exceeded, are shown on each product page.

Formulae for cutting data calculation are found on page 257

5. Machining methods

- Helical interpolation must be used to create the pitch.
- Clockwise or counterclockwise feed direction can be used depending on thread type and machining method (right or left hand, external or internal thread).
- Climb milling and coolant is recommended.

Internal

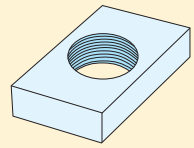

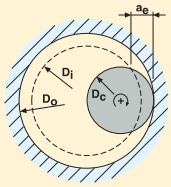

$D_i = D_o - 2h$

Thread	h
ISO	0,60 x p
UN	0,60 x p
W	0,69 x p
BSPT	0,69 x p
NPT	0,78 x p

p = pitch (mm)
h = depth of thread

Radial infeed value a_e:

$$a_e = \frac{D_O^2 - D_i^2}{4\,(D_O - D_C)}$$

D_c = Cutter dia mm
D_o = Major dia mm
D_i = Minor dia mm

External

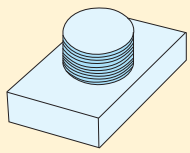

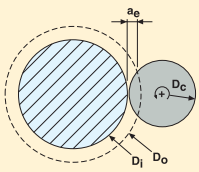

$D_i = D_o - 2h$

Thread	h
ISO	0,65 x p
UN	0,65 x p
W	0,69 x p
BSPT	0,69 x p
NPT	0,78 x p

p = pitch (mm)
h = depth of thread

Radial infeed value a_e:

$$a_e = \frac{D_O^2 - D_i^2}{4\,(D_O - D_C)}$$

D_c = Cutter dia mm
D_o = Major dia mm
D_i = Minor dia mm

Thread Milling 396.18/19 Cutting data

SMG	CP500		F30M		H15	
	f_z	v_c	f_z	v_c	f_z	v_c
P1	0,070	385	0,070	385	—	—
P2	0,075	375	0,075	375	—	—
P3	0,070	325	0,070	325	—	—
P4	0,070	285	0,070	285	—	—
P5	0,065	275	0,065	275	—	—
P6	0,065	305	0,065	305	—	—
P7	0,065	290	0,065	290	—	—
P8	0,070	275	0,070	275	—	—
P11	0,065	280	0,065	280	—	—
M1	0,075	285	0,075	285	—	—
M2	0,065	230	0,065	230	—	—
M3	0,055	175	0,055	175	—	—
M4	0,046	130	0,046	130	—	—
M5	0,046	110	0,046	110	—	—
K1	0,075	300	0,075	300	0,065	270
K2	0,065	260	0,065	260	0,060	235
K3	0,065	220	0,065	220	0,060	200
K4	0,065	210	0,065	210	0,060	190
K5	0,060	125	0,060	125	0,050	115
K6	0,065	185	0,065	185	0,060	170
K7	0,060	160	0,060	160	0,050	145
N1	0,095	1375	0,095	1375	0,080	1375
N2	0,095	890	0,095	890	0,080	890
N3	0,095	590	0,095	590	0,080	590
N11	0,095	780	0,095	780	—	—

SMG = Seco Material Group
f_z = mm/tooth (mm/flute)
v_c= m/min
All cutting data are start values

Feed related to the centre of the cutter

When calculating feed and feed/tooth from average chip thickness using circular interpolation or helical interpolation ramping in an operation, the feed and feed/tooth are always related to the centre and not to the periphery of the cutter.

Tolerance on the machined component.

The tolerance on the thread diameter is 6H when using a cutter with more than one tooth. With a single cutting insert the tolerance is 4H.
If a multi-tooth milling cutter is used with one cutting insert, the other insert seat(s) must be equipped with non-cutting blank insert(s) to stabilise the milling cutter during the cutting process.

As all 396.19 inserts are double sided, it is important that all inserts are mounted in the same position to achieve best possible tolerance. It must be done by indexing the identification dots in the same position. See opposite figure.

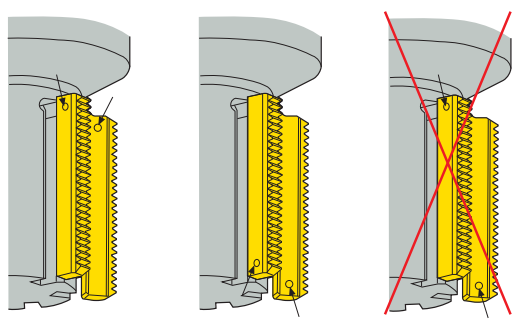

Choice of cutter, inserts and cutting data – Threading Wizard

In order to simplify the selection of tools and cutting parameters Seco has introduced the Threading Wizard software, which eliminates complicated programming and calculations. The Threading Wizard selects the optimum holder and insert, identifies the best operating parameters and then downloads the information to the CNC machine.
The Threading Wizard is free and downloadable at www.secotools.com/customerzone



RPM	$n = \frac{v_c \cdot 1000}{\pi \cdot D_c}$	(rev/min)
Cutting speed	$v_c = \frac{n \cdot \pi \cdot D_c}{1000}$	(m/min)
Feed speed	$v_f = n \cdot z_n \cdot f_z$	(mm/min)
	$v_f = n \cdot z_c \cdot f_z$	(mm/min)
Feed per revolution	$f = z_n \cdot f_z$	(mm/rev)
	$f = z_c \cdot f_z$	(mm/rev)

D_c	=	Cutter diameter	mm
f	=	Feed per revolution	mm/rev
f_z	=	Feed per tooth	mm/tooth
z_c	=	Effective No. of teeth for calculation of feed speed or feed per rev	
n	=	RPM	rev/min
v_c	=	Cutting speed	m/min
v_f	=	Feed speed	mm/min
z_n	=	No. of teeth	

Threadmaster™ – Code key

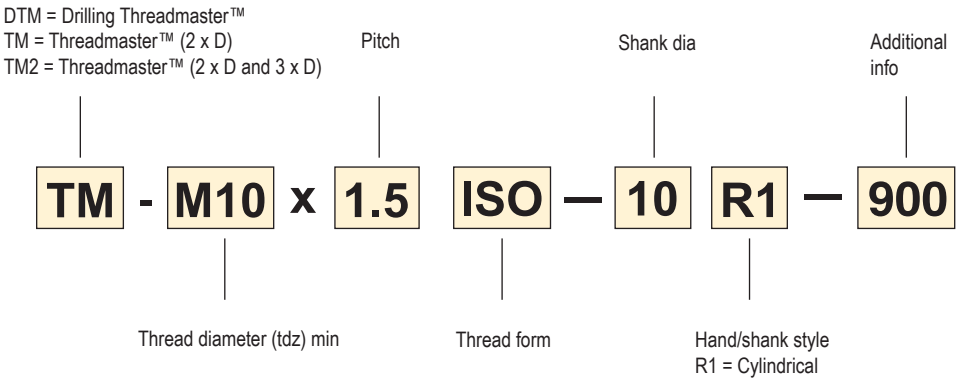

R396.19 – Code key

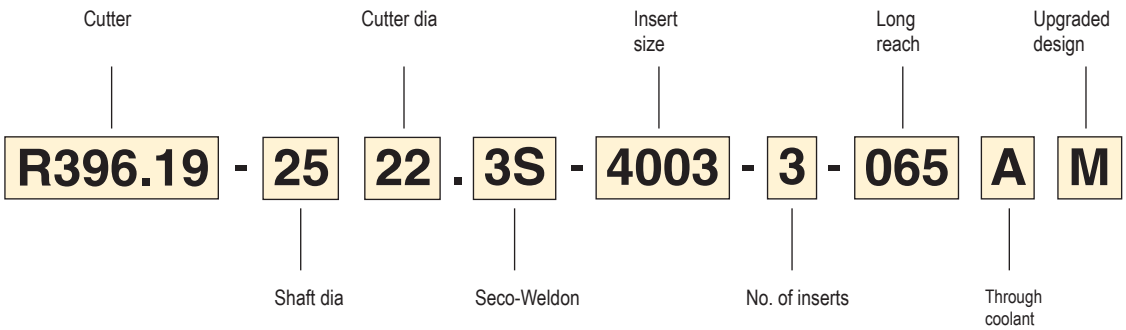

Insert 396.19 – Code key

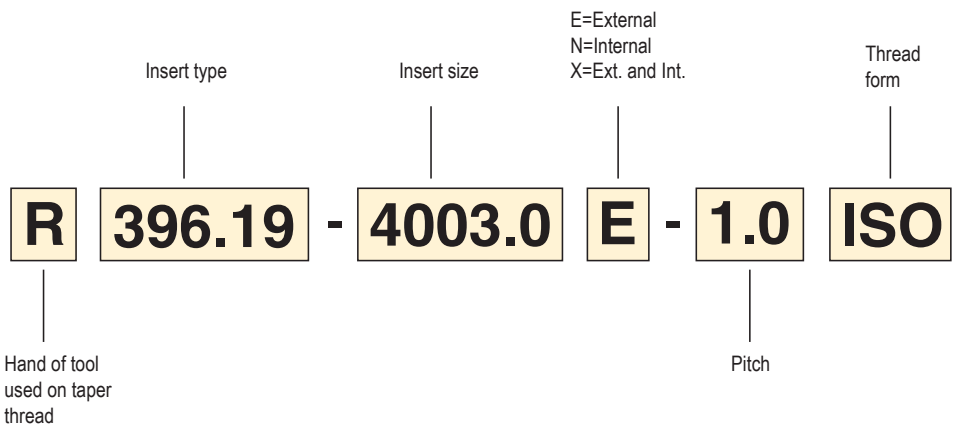

Application overview, milling cutters – Solid carbide

Threadmaster	Threadmaster2	
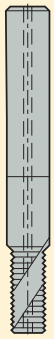	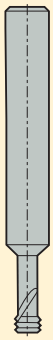	
TM - Thread size M1-M20	TM2 - Threadsize M4-M16	
Solid carbide thread milling cutters for smaller threads	Solid carbide thread milling cutter for smaller threads up to 3 x D	
Pages 260-261, 263-264	Page 262	

Application overview, milling cutters – Cutter with inserts

396.18	396.19	
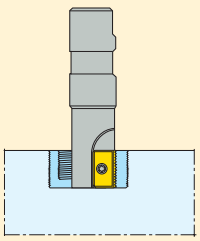	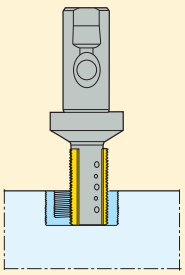	
Ø 12 mm (396.18)	Ø 17-58 mm (396.19)	
Thread milling cutters with indexable inserts	Thread milling cutters with indexable inserts	
Page 265	Pages 265-266	

Threadmaster™

Solid carbide thread milling cutters for smaller threads



- For cutting data recommendations see page 253
- TM; 2 x D

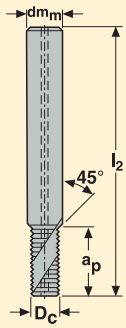

Thread profile	Part No.	Thread tdz	Through coolant	Pitch		Dimensions in mm				No. of flutes
				mm	TPI	D_c	dm_m	l_2	a_p	
Metric coarse										
	TM-M4X0.7ISO-6R1	M4		0,70	–	3,15	6	49	8,0	3
	TM-M4X0.7ISO-6R1-900	M4		0,70	–	3,15	6	49	8,0	3
	TM-M4X0.7ISO-6R1-H	M4		0,70	–	3,15	6	46	6,3	4
	TM-M5X0.8ISO-6R1	M5		0,80	–	3,95	6	49	10,0	3
	TM-M5X0.8ISO-6R1-900	M5		0,80	–	3,95	6	49	10,0	3
	TM-M5X0.8ISO-6R1-H	M5		0,80	–	3,95	6	47	7,2	4
	TM-M6X1.0ISO-6R1	M6		1,00	–	4,70	6	55	12,5	3
	TM-M6X1.0ISO-6R1-900	M6		1,00	–	4,70	6	55	12,5	3
	TM-M6X1.0ISO-6R1-H	M6		1,00	–	4,70	6	52	8,5	4
	TM-M8X1.25ISO-8R1	M8	■	1,25	–	6,20	8	62	16,9	3
	TM-M8X1.25ISO-8R1-900	M8	■	1,25	–	6,20	8	62	16,9	3
	TM-M8X1.25ISO-8R1-H	M8		1,25	–	6,20	8	57	12,5	4
	TM-M10X1.5ISO-10R1	M10	■	1,50	–	7,80	10	74	20,3	3
	TM-M10X1.5ISO-10R1-900	M10	■	1,50	–	7,80	10	74	20,3	3
	TM-M10X1.5ISO-10R1-H	M10		1,50	–	7,80	10	66	15,0	5
	TM-M12X1.75ISO-12R1	M12	■	1,75	–	9,40	12	79	25,4	3
	TM-M12X1.75ISO-12R1-900	M12	■	1,75	–	9,40	12	79	25,4	3
	TM-M12X1.75ISO-12R1-H	M12		1,75	–	9,40	12	76	17,5	5
	TM-M14X2.0ISO-14R1	M14	■	2,00	–	10,90	14	89	29,0	4
	TM-M14X2.0ISO-14R1-900	M14	■	2,00	–	10,90	14	89	29,0	4
	TM-M20X2.5ISO-20R1	M20	■	2,50	–	15,83	20	108	40,0	4
Metric fine										
	TM-MF4X0.5ISO-6R1	M4		0,50	–	3,15	6	49	8,3	3
	TM-MF5X0.5ISO-6R1	M5		0,50	–	3,95	6	49	10,3	3
	TM-MF6X0.75ISO-6R1	M6		0,75	–	4,70	6	55	12,4	3
	TM-MF10X1.0ISO-10R1	M10	■	1,00	–	7,80	10	74	20,5	3
	TM-MF12X1.5ISO-12R1	M12	■	1,50	–	9,40	12	79	24,8	3
	TM-MF12X1.5ISO-12R1-900	M12	■	1,50	–	9,40	12	79	24,8	3
	TM-MF12X1.5ISO-12R1-H	M12		1,50	–	9,40	12	76	17,9	5
	TM-MF14X1.5ISO-14R1-H	M14		1,50	–	10,92	14	82	21,4	5
	TM-MF16X1.5ISO-16R1-H	M16		1,50	–	12,82	16	94	23,9	5
UNC										
	TM-NR.10X24UNC-6R1	No.10		–	24	3,70	6	49	10,1	3
	TM-1/4X20UNC-6R1	1/4		–	20	4,70	6	55	14,6	3
	TM-5/16X18UNC-8R1	5/16	■	–	18	6,20	8	62	16,2	3
	TM-3/8X16UNC-10R1	3/8	■	–	16	7,35	10	74	19,8	3
	TM-7/16X14UNC-12R1	7/16	■	–	14	8,55	12	79	22,7	3
	TM-1/2X13UNC-12R1	1/2	■	–	13	9,40	12	79	26,4	3
	TM-9/16X12UNC-14R1	9/16	■	–	12	10,90	14	89	30,7	4

Please check availability in current price and stock-list.

Threadmaster™

Solid carbide thread milling cutters for smaller threads



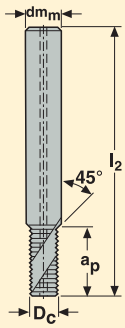

- For cutting data recommendations see page 253
- TM; 2 x D

Thread profile	Part No.	Thread tdz	Through coolant	Pitch		Dimensions in mm				No. of flutes
				mm	TPI	D_c	dm_m	l_2	a_p	
UNF										
	TM-NR.10X32UNF-6R1	No.10		–	32	3,95	6	49	9,9	3
	TM-1/4X28UNF-6R1	1/4		–	28	4,70	6	55	14,1	3
	TM-5/16X24UNF-8R1	5/16	■	–	24	6,20	8	62	16,4	3
	TM-3/8X24UNF-10R1	3/8	■	–	24	7,80	10	74	19,6	3
	TM-7/16X20UNF-12R1	7/16	■	–	20	9,30	12	79	22,2	3
	TM-1/2X20UNF-12R1	1/2	■	–	20	9,40	12	79	26,0	3
	TM-9/16X18UNF-14R1	9/16	■	–	18	10,90	14	89	28,9	4
NPT										
	TM-1/8X27NPT-12R1	1/8	■	–	27	7,80	12	70	8,9	3
	TM-1/4X18NPT-16R1	1/4	■	–	18	10,05	16	81	13,4	4
	TM-3/8X18NPT-18R1	3/8	■	–	18	13,45	18	81	13,4	4
NPTF										
	TM-1/8X27NPTF-12R1	1/8	■	–	27	7,70	12	70	8,9	3
	TM-1/4X18NPTF-16R1	1/4	■	–	18	10,00	16	81	13,4	4
	TM-3/8X18NPTF-18R1	3/8	■	–	18	13,40	18	81	13,4	4
BSP										
	TM-1/8X28W-10R1	1/8	■	–	28	7,80	10	74	20,4	3
	TM-1/4X19W-14R1	1/4	■	–	19	10,90	14	89	27,4	3
	TM-3/8X19W-18R1	3/8	■	–	19	13,90	18	102	35,4	3

Please check availability in current price and stock-list.

Threadmaster™ 2

Solid carbide thread milling cutters for smaller threads



- For cutting data recommendations, see page 253
- TM22; 2 x D
- TM23; 3 x D

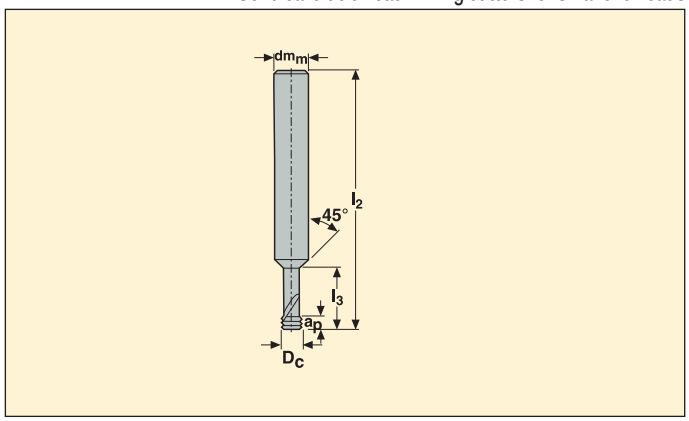

Thread profile	Part No.	Thread tdz	Pitch		Dimensions in mm					No. of flutes
			mm	TPI	D_c	dm_m	l_2	l_3	a_p	
Metric coarse										
	TM22-M4X0.7ISO-V06R1	M4	0,70	–	3,14	6	57	9,0	2,10	3
	TM22-M5X0.8ISO-V06R1	M5	0,80	–	3,95	6	57	11,0	2,40	3
	TM22-M6X1.0ISO-V06R1	M6	1,00	–	4,68	6	57	13,0	3,00	3
	TM22-M8X1.25ISO-V08R1	M8	1,25	–	6,22	8	63	17,0	3,75	3
	TM22-M10X1.5ISO-V010R1	M10	1,50	–	7,79	10	79	21,0	4,50	4
	TM22-M12X1.75ISO-V010R1	M12	1,75	–	9,38	10	79	25,0	5,25	5
	TM22-M16X2.0ISO-V012R1	M16	2,00	–	11,90	12	95	33,0	6,00	5
UNC										
	TM22-1/4X20UNC-V06R1	1/4	–	20	4,70	6	57	13,7	3,81	3
	TM22-5/16X18UNC-V08R1	5/16	–	18	6,22	8	63	16,9	4,23	3
	TM22-3/8X16UNC-V010R1	3/8	–	16	7,34	10	79	20,1	4,76	4
	TM22-7/16X14UNC-V010R1	7/16	–	14	8,57	10	79	23,2	5,44	5
	TM22-1/2X13UNC-V012R1	1/2	–	13	9,38	12	90	26,4	5,86	5
UNF										
	TM22-10X32UNF-V06R1	No10	–	32	3,95	6	57	10,7	2,38	3
	TM22-1/4X28UNF-V06R1	1/4	–	28	4,70	6	57	13,7	2,72	3
	TM22-5/16X24UNF-V08R1	5/16	–	24	6,22	8	63	16,9	3,18	3
	TM22-3/8X24UNF-V010R1	3/8	–	24	7,79	10	79	20,1	3,18	4
	TM22-1/2X20UNF-V012R1	1/2	–	20	9,38	12	90	26,4	3,81	5
Metric coarse										
	TM23-M4X0.7ISO-V06R1	M4	0,70	–	3,14	6	57	13,0	2,10	3
	TM23-M5X0.8ISO-V06R1	M5	0,80	–	3,95	6	57	16,0	2,40	3
	TM23-M6X1.0ISO-V06R1	M6	1,00	–	4,68	6	57	19,0	3,00	3
	TM23-M8X1.25ISO-V08R1	M8	1,25	–	6,22	8	63	25,0	3,75	3
UNF										
	TM23-10X32UNF-V06R1	No10	–	32	3,95	6	57	15,5	2,38	3
	TM23-1/4X28UNF-V06R1	1/4	–	28	4,70	6	57	20,1	2,72	3
	TM23-5/16X24UNF-V08R1	5/16	–	24	6,22	8	63	24,8	3,18	3
UNC										
	TM23-1/4X20UNC-V06R1	1/4	–	20	4,70	6	57	20,1	3,81	3
	TM23-5/16X18UNC-V08R1	5/16	–	18	6,22	8	63	24,8	4,23	3

Please check availability in current price and stock-list.

Threadmaster™ – TM-Mini



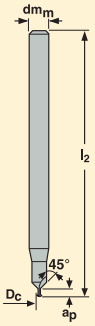

- Left-hand cutter
- For cutting data recommendations, see page 253
- TM ; 1.5 x D

Thread profile	Part No.	Thread tdz	Through coolant	Pitch		Dimensions in mm				No. of flutes
				mm	TPI	D_c	dm_m	l_2	a_p	
Metric coarse										
	TM-M1.0X0.25ISO-3R1-H	M1.0	No	0,25	–	0,70	3	40	2,05	2
	TM-M1.4X0.30ISO-3R1-H	M1.4	No	0,30	–	0,97	3	40	2,63	2
	TM-M1.6X0.35ISO-3R1-H	M1.6	No	0,35	–	1,15	3	40	3,07	2
	TM-M2.0X0.40ISO-3R1-H	M2.0	No	0,40	–	1,56	3	40	3,74	2
	TM-M2.2X0.45ISO-3R1-H	M2.2	No	0,45	–	1,71	3	40	3,90	2
	TM-M2.5X0.45ISO-3R1-H	M2.5	No	0,45	–	2,01	3	40	4,45	3

Please check availability in current price and stock-list.

Drilling Threadmaster™



- For cutting data recommendations see page 254
- DTM; 2 x D

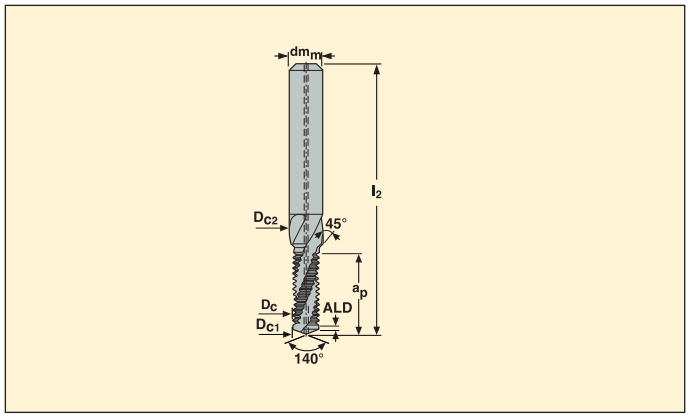

Thread profile	Part No.	Thread tdz	Through coolant	Pitch		Dimensions in mm							No. of flutes
				mm	TPI	ALD	D_c	D_{c1}	D_{c2}	dm_m	l_2	a_p	
Metric coarse													
	DTM-M4X0.7ISO-6R1	M4	■	0,70	–	0,7	3,24	3,3	4,30	6	49	9,42	2
	DTM-M5X0.8ISO-6R1	M5	■	0,80	–	0,8	4,10	4,2	5,30	6	55	11,65	2
	DTM-M6X1.0ISO-8R1	M6	■	1,00	–	1,0	4,85	5,0	6,30	8	62	14,49	2
	DTM-M8X1.25ISO-10R1	M8	■	1,25	–	1,2	6,45	6,75	8,30	10	74	18,17	2
	DTM-M10X1.5ISO-12R1	M10	■	1,50	–	1,5	8,08	8,5	10,30	12	79	23,37	2
	DTM-M12X1.75ISO-14R1	M12	■	1,75	–	1,5	9,74	10,25	12,30	14	89	27,06	2
	DTM-M14X2.0ISO-16R1	M14	■	2,00	–	1,5	11,36	12,0	14,30	16	102	32,77	2
	DTM-M16X2.0ISO-18R1	M16	■	2,00	–	1,5	13,28	14,0	16,30	18	102	37,12	2
Metric fine													
	DTM-MF8X1.0ISO-10R1	M8	■	1,00	–	1,0	6,79	7,0	8,30	10	74	18,8	2
	DTM-MF10X1.0ISO-12R1	M10	■	1,00	–	1,5	8,75	9,0	10,30	12	79	23,18	2
	DTM-MF12X1.5ISO-14R1	M12	■	1,50	–	1,5	10,06	10,5	12,30	14	89	28,19	2
UNC													
	DTM-1/4X20UNC-8R1	1/4	■	–	20	1,2	4,70	5,08	6,65	8	62	15,71	2
	DTM-5/16X18UNC-10R1	5/16	■	–	18	1,4	6,01	6,53	8,24	10	74	19,0	2
	DTM-3/8X16UNC-12R1	3/8	■	–	16	1,5	7,36	7,94	9,83	12	79	22,97	2
	DTM-1/2X13UNC-14R1	1/2	■	–	13	1,5	9,87	10,75	13,00	14	89	30,07	2
UNF													
	DTM-1/4X28UNF-8R1	1/4	■	–	28	0,9	5,17	5,44	6,65	8	62	15,16	2
	DTM-5/16X24UNF-10R1	5/16	■	–	24	1,1	6,51	6,88	8,24	10	74	18,83	2
	DTM-3/8X24UNF-12R1	3/8	■	–	24	1,1	8,07	8,47	9,83	12	79	21,2	2
	DTM-1/2X20UNF-14R1	1/2	■	–	20	1,3	10,88	11,43	13,00	14	89	28,19	2
BSP													
	DTM-1/8X28W-12R1	1/8	■	–	28	0,9	8,40	8,71	10,03	12	79	22,03	2
	DTM-1/4X19W-16R1	1/4	■	–	19	1,3	11,44	11,67	13,46	16	102	29,45	2

Please check availability in current price and stock-list.

R396.18/R396.19



- For cutting data recommendations, see page 256
- For insert programme, see page 267-269

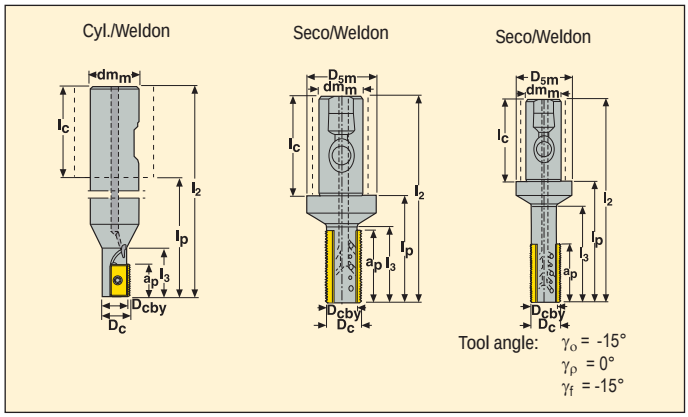

Part No.	Dimensions in mm										KG		Type of mounting	
	D_c	D_{cby}	dm_m	D_{5m}	l_2	l_p	l_3	l_c	a_p					
R396.18 -2012.3-13A	12	10	20	–	105	38	20	67	13	1	0,2	30000	Cyl.-Weldon	13.MS
R396.19 -2517.3S-4003-2AM	17	13	25	40	116	60	26	56	25	2	0,5	22400	Seco-Weldon	396.19-4003
-2522.3S-4003-3AM	22	17,6	25	40	116	60	43	56	40	3	0,4	20000	Seco-Weldon	396.19-4003
-3232.3S-4003-6AM	32	27,4	32	50	120	60	43	60	40	6	0,7	16800	Seco-Weldon	396.19-4003
R396.19 -2525.3S-4005-2AM	25	19	25	40	116	60	43	56	40	2	0,4	13600	Seco-Weldon	396.19-4005
-2530.3S-4005-3AM	30	23	25	40	116	60	43	56	40	3	0,5	12000	Seco-Weldon	396.19-4005
-3236.3S-4005-6AM	36	28,2	32	50	120	60	42	60	40	6	0,7	11200	Seco-Weldon	396.19-4005
R396.19 -2522.3S-4003-3-065AM	22	17,6	25	40	140	84	65	56	40	3	0,5	20000	Seco-Weldon	396.19-4003
-2530.3S-4005-3-080AM	30	22,2	25	40	154	98	80	56	40	3	0,6	12000	Seco-Weldon	396.19-4005

Spare Parts, Parts included in delivery

For cutter	Insert screw	Insert key*	Torque value Nm*
R396.18	C02506-T07P	T07P-2	0,9
R396.19	P6SS4x4-T09P	T09P-2	2

Min thread diameter (major dia), for different pitch and cutter combinations

For cutter	Pitch, mm										
	1	1,5	2	2,5	3	3,5	4	4,5	5	5,5	6
	TPI										
	24	16	12	10	8	7	6		5		4
R396.18-2012.3-13A	14	15	16	–	–	–	–	–	–	–	–
R396.19-2517.3S-4003-2AM	19	20	21	22	24	–	–	–	–	–	–
R396.19-2522.3S-4003-3AM	24	25	26	27	27	–	–	–	–	–	–
R396.19-2522.3S-4003-3-065AM	24	25	26	27	27	–	–	–	–	–	–
R396.19-3232.3S-4003-6AM	34	35	36	39	40	–	–	–	–	–	–
R396.19-2525.3S-4005-2AM	–	–	–	–	30	33	35	37	–	–	–
R396.19-2530.3S-4005-3AM	–	–	–	–	38	40	42	44	45	47	48
R396.19-2530.3S-4005-3-080AM	–	–	–	–	38	40	42	44	45	47	48
R396.19-3236.3S-4005-6AM	–	–	–	–	43	45	47	47	48	50	53

Please check availability in current price and stock-list.
Note! When milling threads to smaller diameters than indicated for a certain pitch/cutter combination, an incorrect thread form will result.
* Torque key T00-07P09, T00-09P20.

R396.19



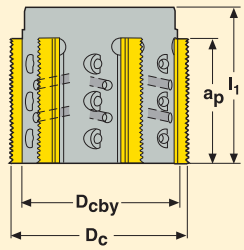

Tool angle: γ_o = -15°
γ_p = 0°
γ_f = -15°

- For cutting data recommendations, see page 256
- For insert programme, see page 267-269

Part No.	Dimensions in mm D_c	D_{cby}	l_1	a_p		KG		
R396.19 -0058-4003-6AM	58	53	50	40	6	0,7	8600	396.19-4003
-0058-4005-6AM	58	50	50	40	6	0,6	8600	396.19-4005

Spare Parts, Parts included in delivery

For cutter	Insert screw	Insert key*	Arbor screw
R396.19	P6SS4x4-T09P	T09P-2	MC6S 12x40

Min thread diameter (major dia), for different pitch and cutter combinations

For cutter	Pitch, mm 1	1,5	2	2,5	3	3,5	4	4,5	5	5,5	6
	TPI 24	16	12	10	8	7	6		5		4
R396.19-0058-4003-6AM	62	63	65	66	67	–	–	–	–	–	–
R396.19-0058-4005-6AM	–	–	–	–	67	69	70	71	72	73	74

*Torque values 2 Nm. Torque key, T00-09P20.

Dimensions of mounting

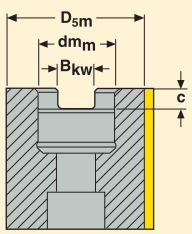

For cutter	Dimensions in mm dm_m	D_{5m}	B_{kw}	c	For arbor
R396.19-0058-4003-6AM	27	53	12,4	7	27
R396.19-0058-4005-6AM	27	50	12,4	7	27

Please check availability in current price and stock-list.

13NMS/XMS

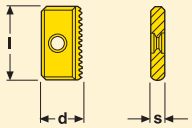

Tolerances:
d = ±0,012
s = ±0,025
l = ±0,012

Size	Dimensions in mm d	l	s
13NMS	7,00	13,0	2,5
13XMS	7,00	13,0	2,5

13NMS/XMS



Inserts	Part No.	Grades Coated CP500				
For internal threading	13NMS 1.0ISO	■				
	1.5ISO	■				
	2.0ISO	■				
For internal threading	24UN	■				
	20UN	■				
	16UN	■				
For external and internal threading	13XMS 19W	■				
	14W	■				

■ Stock standard
Subject to change refer to current price and stock-list.

396.19-4003

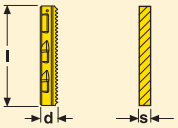

Tolerances:
d = ±0,012
s = ±0,05
l = ±0,007

Size	Dimensions in mm d	l	s
4003	–	40,0	3,5

396.19-4003



Inserts	Part No.	Grades F30M	H15			
For external threading	396.19 -4003.0E1.0ISO	■				
	-4003.0E1.5ISO	■				
	-4003.0E2.0ISO	■				
For external threading	396.19 -4003.0E18UN	■				
	-4003.0E16UN	■				
	-4003.0E14UN	■				
	-4003.0E12UN	■				
For internal threading	396.19 -4003.0N1.0ISO	■	■			
	-4003.0N1.5ISO	■	■			
	-4003.0N2.0ISO	■	■			
	-4003.0N2.5ISO	■				
	-4003.0N3.0ISO	■				
For internal threading	396.19 -4003.0N20UN	■				
	-4003.0N18UN	■				
	-4003.0N16UN	■	■			
	-4003.0N14UN	■	■			
	-4003.0N12UN	■	■			
	-4003.0N10UN	■				
	-4003.0N9UN	■				
	-4003.0N8UN	■				
For external and internal threading	396.19 -4003.0X16W	■				
	-4003.0X14W	■				
	-4003.0X12W	■				
	-4003.0X11W	■				

■ Stock standard
Subject to change refer to current price and stock-list.

396.19-4003/4005

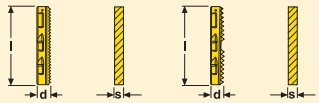

Tolerances: 4003...
d = ±0,012
s = ±0,05
l = ±0,007

Tolerances: 4005...
d = ±0,012
s = ±0,05
l = ±0,015

Size	Dimensions in mm d	l	s
4003	–	40,0	3,5
4005	–	40,0	4,85

396.19-4003/4005 - R396.19-4003/4005



Inserts	Part No.	Grades F30M	H15			
For internal threading	396,19 -4005.0N3.5ISO	■				
	-4005.0N4.0ISO	■				
	-4005.0N4.5ISO	■				
	-4005.0N5.0ISO	■				
	-4005.0N5.5ISO	■				
	-4005.0N6.0ISO	■				
	396,19 -4005.0N7UN	■				
	-4005.0N6UN	■				
	-4005.0N5UN	■				
	-4005.0N4.5UN	■				
	-4005.0N4UN	■				
For external and internal threading	396,19 -4005.0X8W	■				
	R396,19-4003.0X14NPT	■				
	-4003.0X11.5NPT	■				
	-4005.0X8NPT	■				
	R396,19-4003.0X14NPTF	■				
	-4003.0X11.5NPTF	■				
	R396,19-4003.0X14BSPT	■				
	-4003.0X11BSPT	■				
Non cutting blank	396,19 -4003XX		■			
	-4005XX		■			

■ Stock standard
Subject to change refer to current price and stock-list.

Introduction to taps

What are you looking for in a thread?

Cutting a thread vs forming a thread

There are two way of making a thread, cutting or forming. Cutting is to be used in most materials, while forming is to be used in steel, stainless steel and aluminium.

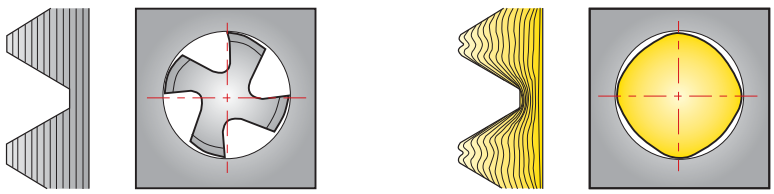

Through hole, blind hole

Taps have different designs. Depending on application (through or blind hole).



Hole size

Dimension of the hole differs between cutting and forming the thread.

Cutting tap
D=TD-PTH

Forming tap
D=TD-PTH/2



D = Hole diameter
TD = Major thread diameter
PTH = Thread pitch

Introduction to taps – Tool guide

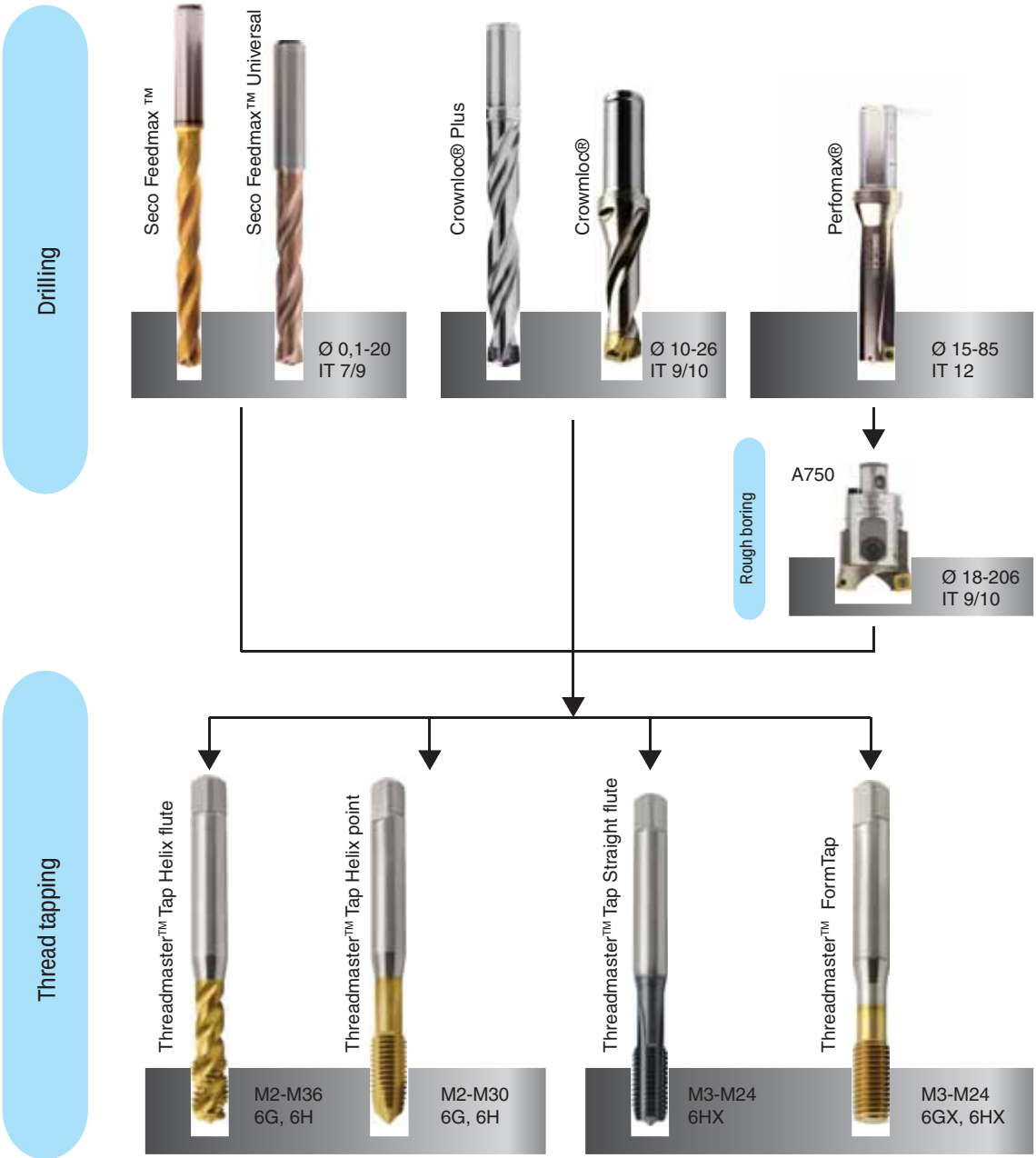

Also other threading profiles are available.

Taps - Choice of tap

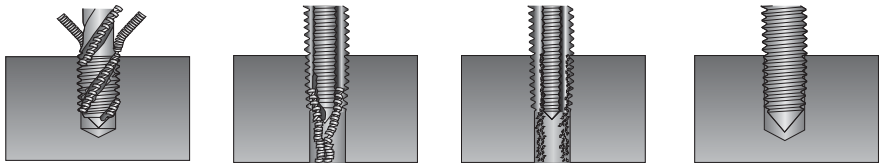

1. Threadmaster™ Tap Helix flute	Available with 15° and 45° spiral for different materials. For blind holes.
2. Threadmaster™ Tap Helix point	For through holes. To be used under tough conditions.
3. Threadmaster™ Tap Straight flutes	For short chipping materials, ie cast iron. To be used for all types of holes and depths.
4. Threadmaster™ FormTap	Forms the thread. For steel, stainless steels and aluminium.Workpiece material need some ductility and also with a limit of tensile strength of 1200N/mm^2. For all types of holes and depths. Strength of thread is increased.

Taps – Entering chamfer

B-type

Length 3.5 – 5 threads
High torque
Best surface finish
Thin chip thickness
Low pressure at the chamfer
Long tool life
Most common for through holes (Helix point)

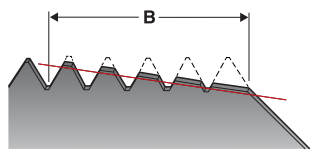

C-type

Length 2 - 3 threads
Medium torque
Good surface finish
Normal chip thickness
Normal pressure at the chamfer
Normal tool life
Most common design
Standard for blind holes
Most common for blind holes (Helix flute)

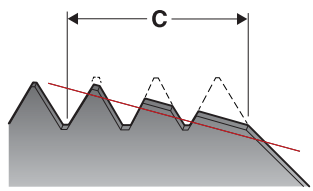

E-type

Length 1.5 – 2 threads
Low torque
Good surface finish
Thick chip thickness
High pressure at the chamfer
Shorter tool life
When limited space in the bottom of a hole

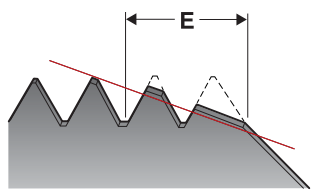

Taps - Choice of toolholder

The tool holder choice is made according to the machine spindle, with or without synchronization:

1. Modern CNC machine with synchronization:

The modern CNC machines can synchronize the spindle feed rate and rotation in order to make a rigid tapping operation. The EPB 5867 – tapping chucks with micro-compensation is the most suitable for synchronized tapping. Alternative solutions are the Type 5865 or Type 5260.

EPB 5867 Tapping chucks with micro-compensation, for synchronized tapping:

EPB 5867 for synchronized tapping has a micro-compensation system to avoid the small discrepancies and axial forces during rigid tapping machining. The taps are mounted in specific ER collets with square drive.
Note: These ER collets with square drive can also be mounted in ER collet chucks (Type 5675), but then without micro-compensation

EPB 5865 ER tapping chucks, for synchronized tapping:

EPB 5865 for rigid synchronized tapping, with ER standard collets, offers flexibility and precise tap holding for a complete rigid tapping system without compensation. The square clamping system is based on two driving tenons clamping the tap square, while the cylindrical shank is clamped into the ER standard collet.

EPB 5260 Quick change tapping chucks, for synchronized tapping:

EPB 5260 – Quick change tapping chucks for synchronized tapping are used with tap adapter type 5241 without torque limiter and allow fast changing of the tap

2. Conventional machine without synchronization

Conventional machine tools are not featured with synchronization of the spindle feed rate and rotation. Tapping chuck with axial compensation is necessary to machine threads, e.g. Type 5283.

EPB 5283 – Quick change tapping chucks with axial compensation:

EPB 5283 Offer an axial feed compensation and extension which ensure a good machining process. The quick change system is used with tap adapter type 5285 with torque limiter to avoid tool breakage during tapping operation.

EPB 5867



EPB 5865



EPB 5260



EPB 5283



Taps – Choice of Tap tolerance

The Threadmaster™ Taps from Seco are available for threads with different tolerences 6H and 6G, as well in 6HX and 6GX.
Normal standard tolerance is H.
Tolerance GX/HX and BX is to be used when risk of oversize is limited, this also increases tool life of the tap.
Taps for UNC/UNF are designed for tolerance 2B.
Tolerance class for G and NPT/NPTF is normal.

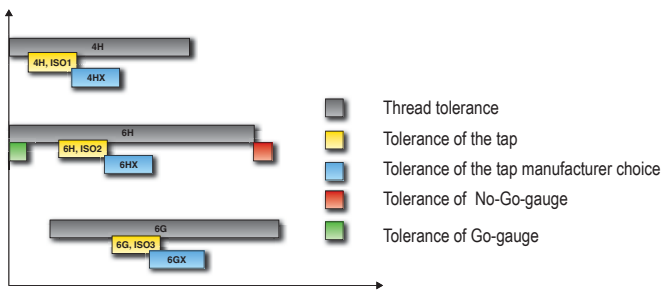

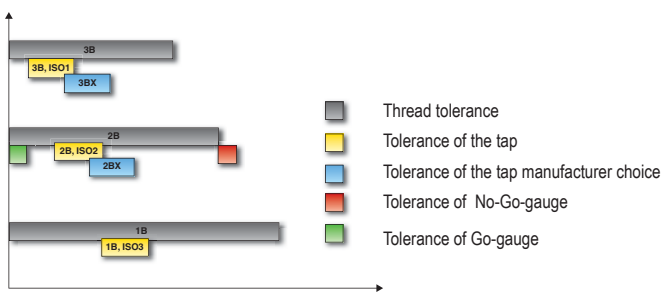

Code key – Taps

MTS	-	M10	X	1.5ISO	6H	-	B	C	-	V	0	01	-	A
1		2		3	4		5	6		7	8	9		10

No. 1

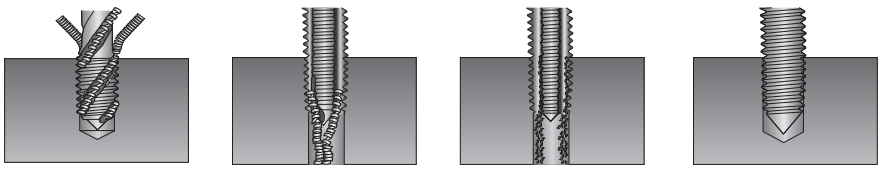

MTH MTS MF

- MTH = Threadmaster™ Tap Helix flute or Helix point tap
- MTS = Threadmaster™ Tap Straight flute tap
- MF = Threadmaster™ FormTap

No.	Description
2	Thread type and size
3	Pitch and form
4	Tolerance (tctr) 6G, 6GX, 6H , 6HX, 2B, Normal
5	Operation, B = Blind hole, T = Through hole, X = Blind and Through hole
6	Entering Chamfer(THCHT) B = Entering chamfer 3,5 - 5 threads C = Entering chamfer 2 - 3 threads E = Entering chamfer 1,5 - 2 threads
7	V = Versatile, S = Specific
8	Release No.= 0 (2014)
9	Tool type No. = 01, 02, 03, 04 etc
10	A = Through coolant

Threading taps Cutting data

SMG	v_c				
	S005, S010	S015, S020	V001, V002, V005, V006, V007, V008, V014, V017, V020, V023, V025, V026, V028, V029, V030, V033, V038, V040, V043, V045	V048, V050	V053, V055, V058, V060-A, V063
P1	—	43	50	11	65
P2	—	41	48	11	60
P3	—	36	42	10	55
P4	—	31	37	8	47
P5	—	30	35	8	45
P6	—	34	39	9	50
P7	—	32	37	8	48
P8	—	30	35	8	45
P11	—	31	36	8	46
M1	—	—	10	7	25
M2	—	—	8	6	20
M3	—	—	6	5	15
M4	—	—	5	3	11
M5	—	—	4	3	10
K1	36	—	—	14	—
K2	31	—	—	12	—
K3	26	—	—	10	—
K4	25	—	—	10	—
K5	15	—	—	6	—
K6	22	—	—	9	—
K7	19	—	—	8	—
N1	—	31	47	23	55
N2	—	20	30	15	35
N3	—	13	20	10	22
N11	—	—	30	10	30

SMG = Seco Material Group
v_c = m/min

Cutting speeds (v_c) in the table are recommendations for a start value and calculated when running in 2xD, except for V048, V050 that are calculated from 1,5xD.
When running in 1,5xD increse speed by 20% and at 2,5 x D reduce speed by 20%. At 3 x D reduce by 30%.
Due to machine, material and setup condition it is advisable also to optimize cutting data.

Recommended ranges to use for each type of tap:

S005-S010: +25% / -25%
S015-S020: +15% / -15%
V001-V045: +15% / -15%
V048-V050: +35% / -35%
V053-V063: +15% / -15%

Troubleshooting

Oversized thread

Wrong tap for application
- Refer to application charts

Incorrect axial feed
- Ensure feed rate is controlled
- If possible, use tool holder for syncronized tapping

Wrong cutting speed
- Refer to recommendations

Wrong tolerance
- Choose tap with lower tolerance



Undersized thread

Tap worn out
- Replace tap

Tap drill hole too small
- Check drilling recommendations

Material closing after tapping
- Increase drill diameter

Wrong tolerance on tap
- Choose tap with higher tolerance



Chipping

Wrong tap for the application
- Check for tool selection

Incorrect or lack of lubricant
- Use appropriate emulsion or oil

Tap hitting bottom of hole
- Increase drill depth or reduce thread depth

Trapped chip
- Check tool selection

Surface hardening in drilled hole
- Check drilling recommendations

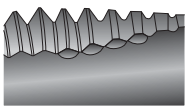

Breakage

Too high torque
- Use tap holder with torque settings

Tap worn out
- Replace tap

Incorrect or lack of lubricant
- Use appropriate emulsion or oil

Tap hitting bottom of hole
- Increase drill depth or reduce thread depth

Wrong cutting speed
- Refer to recommendations

“Birdnest” around tool
- Check tool selection

Tap drill hole too small
- Check drilling recommendations

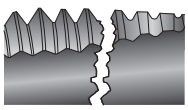

Rapid wear

Wrong type of tap for application
- Refer to tap choice

Incorrect or lack of lubricant
- Use appropriate emulsion or oil

Too high cutting speed
- Refer to recommendations

Work (surface) hardening in drilled hole
- Check drilling recommendations
- Drill worn out

Tap drill hole too small
- Check drilling recommendations

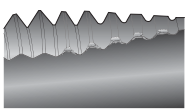

Built-up edge

Incorrect or lack of lubricant
- Use appropriate emulsion or oil

Tap worn out
- Replace tap

Wrong cutting speed
- Refer to recommendations

Wrong type of tap for application
- Refer to tap choice

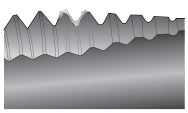

Application overview taps

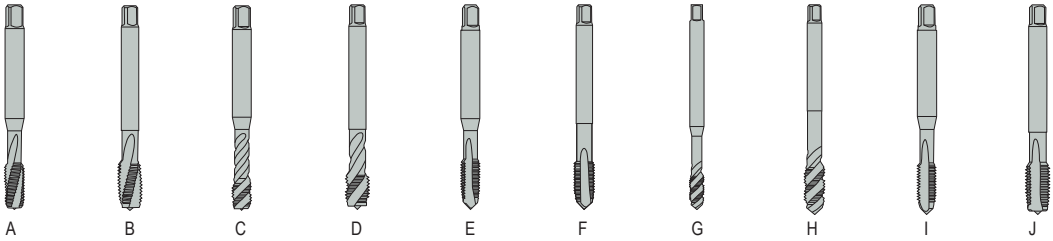

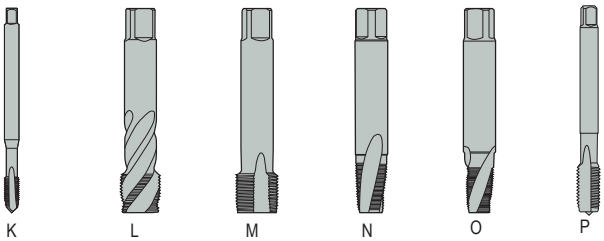

SMG	THREAD	TYPE	DEPTH	THREAD SIZE	DESIGN	TOLERANCE	TOOL TYPE	PAGE	Drawing
P	M	BLIND	1.5 x D	M3-M10	DIN371	6H	S015	295	A
			1.5 x D	M12-M36	DIN376	6H	S020	296	B
			2.5 x D	M3-M10	DIN371	6G	V028	299	C
			2.5 x D	M2-M10	DIN371	6H	V030	301	C
			2.5 x D	M12-M20	DIN376	6G	V029	300	D
			2.5 x D	M6-M36	DIN376	6H	V033	302	D
		THROUGH	2.5 x D	M3-M10	DIN371	6G	V005	287	E
			2.5 x D	M2-M10	DIN371	6H	V007	289	E
			2.5 x D	M12-M20	DIN376	6G	V006	288	F
			2.5 x D	M3-M30	DIN376	6H	V008	290	F
		BLIND	3 x D	M3-M10	DIN371	6H	V025	297	G
			3 x D	M12-M20	DIN376	6H	V026	298	H
		THROUGH	3 x D	M3-M10	DIN371	6H	V001	285	I
			3 x D	M12-M20	DIN376	6H	V002	286	F
	MF	BLIND	2.5 x D	MF4-MF30	DIN374	6H	V038	303-304	D
		THROUGH	2.5 x D	MF4-MF30	DIN374	6H	V014	291	J
	UNC	BLIND	2.5 x D	UNC 4-UNC 5/8	DIN2184-1	2B	V040	305	C
		THROUGH	2.5 x D	UNC 4-UNC 5/8	DIN2184-1	2B	V017	292	K
	UNF	BLIND	2.5 x D	UNF 8-UNF 5/8	DIN2184-1	2B	V043	306	C
		THROUGH	2.5 x D	UNF 8-UNF 5/8	DIN2184-1	2B	V020	293	K
	G	BLIND	2.5 x D	G 1/8-G 1 1/2	DIN5156	NORMAL	V045	307	L
		THROUGH	2.5 x D	G 1/8-G 5/8	DIN5156	NORMAL	V023	294	M
	NPT	BOTH	1.5 x D	NPT 1/16-NPT 1	DIN/ANSI	NORMAL	V048	308	N
	NPTF	BOTH	1.5 x D	NPTF 1/16-NPTF 3/4	DIN/ANSI	NORMAL	V050	309	O

Application overview taps

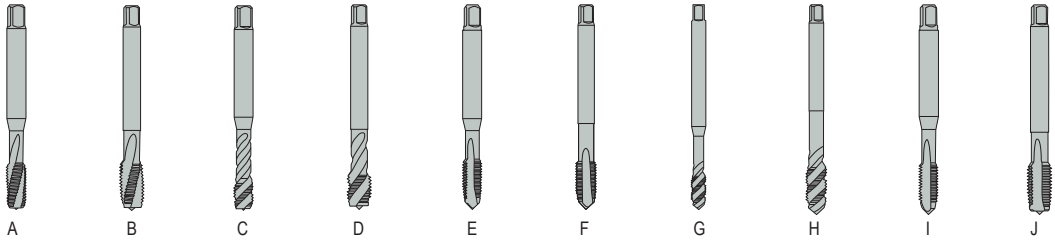

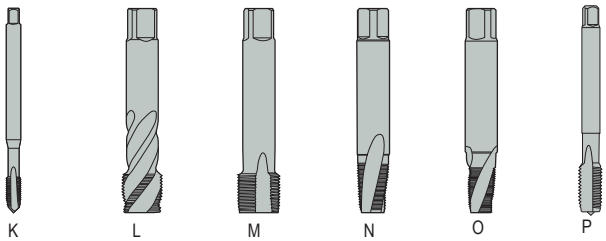

SMG	THREAD	TYPE	DEPTH	THREAD SIZE	DESIGN	TOLERANCE	TOOL TYPE	PAGE	Drawing
M	M	BLIND	2.5 x D	M3-M10	DIN371	6G	V028	299	C
			2.5 x D	M2-M10	DIN371	6H	V030	301	C
			2.5 x D	M12-M20	DIN376	6G	V029	300	D
			2.5 x D	M6-M36	DIN376	6H	V033	302	D
		THROUGH	2.5 x D	M3-M10	DIN371	6G	V005	287	E
			2.5 x D	M2-M10	DIN371	6H	V007	289	E
			2.5 x D	M12-M20	DIN376	6G	V006	288	F
			2.5 x D	M3-M30	DIN376	6H	V008	290	F
		BLIND	3 x D	M3-M10	DIN371	6H	V025	297	G
				M12-M20	DIN376	6H	V026	298	H
		THROUGH	3 x D	M3-M10	DIN371	6H	V001	285	I
				M12-M20	DIN376	6H	V002	286	F
	MF	BLIND	2.5 x D	MF4-MF30	DIN374	6H	V038	303-304	D
		THROUGH	2.5 x D	MF4-MF30	DIN374	6H	V014	291	J
	UNC	BLIND	2.5 x D	UNC 4-UNC 5/8	DIN2184-1	2B	V040	305	C
		THROUGH	2.5 x D	UNC 4-UNC 5/8	DIN2184-1	2B	V017	292	K
	UNF	BLIND	2.5 x D	UNF 8-UNF 5/8	DIN2184-1	2B	V043	306	C
		THROUGH	2.5 x D	UNF 8-UNF 5/8	DIN2184-1	2B	V020	293	K
	G	BLIND	2.5 x D	G 1/8-G 1 1/2	DIN5156	NORMAL	V045	307	L
		THROUGH	2.5 x D	G 1/8-G 5/8	DIN5156	NORMAL	V023	294	M
	NPT	BOTH	1.5 x D	NPT 1/16-NPT 1	DIN/ANSI	NORMAL	V048	308	N
	NPTF	BOTH	1.5 x D	NPT 1/16-NPTF 3/4	DIN/ANSI	NORMAL	V050	309	O

Application overview taps

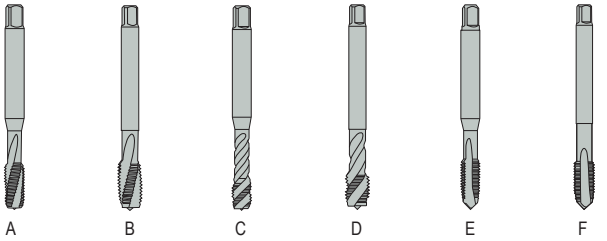

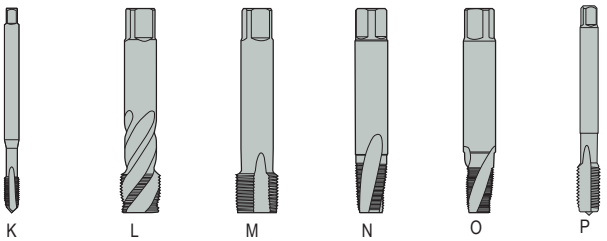

SMG	THREAD	TYPE	DEPTH	THREAD SIZE	DESIGN	TOLERANCE	TOOL TYPE	PAGE	Drawing
K	M	BOTH	2 x D	M3-M10	DIN371	6HX	S005	283	I
				M8-M24	DIN376	6HX	S010	284	P
		BLIND	3 x D	M3-M10	DIN371	6H	V025	297	G
				M12-M20	DIN376	6H	V026	298	H
		THROUGH	3 x D	M3-M10	DIN371	6H	V001	285	I
				M12-M20	DIN376	6H	V002	286	F
	NPT	BOTH	1.5 x D	NPT 1/16-NPT 1	DIN/ANSI	NORMAL	V048	308	N
	NPTF	BOTH	1.5 x D	NPTF 1/16-NPTF 3/4	DIN/ANSI	NORMAL	V050	309	O

Application overview taps

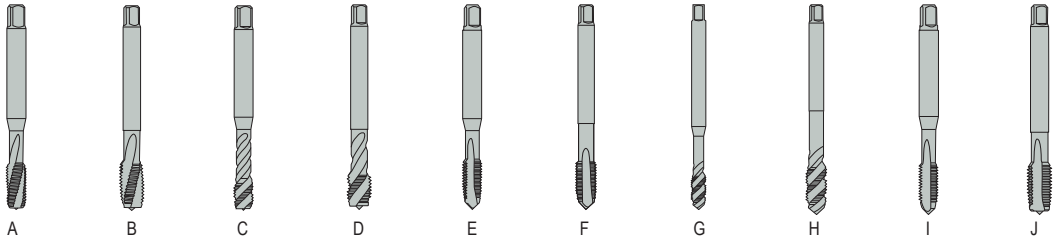

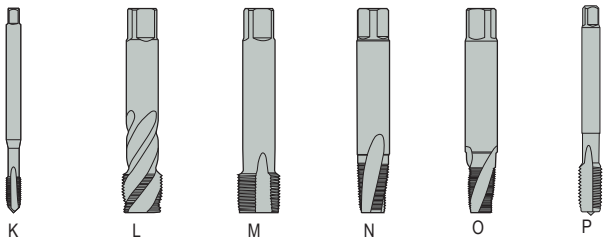

SMG	THREAD	TYPE	DEPTH	THREAD SIZE	DESIGN	TOLERANCE	TOOL TYPE	PAGE	Drawing
N	M	BLIND	1.5 x D	M3-M10	DIN371	6H	S015	295	A
			1.5 x D	M12-M36	DIN376	6H	S020	296	B
			2.5 x D	M3-M10	DIN371	6G	V028	299	C
			2.5 x D	M2-M10	DIN371	6H	V030	301	C
			2.5 x D	M12-M20	DIN376	6G	V029	300	D
			2.5 x D	M6-M36	DIN376	6H	V033	302	D
		THROUGH	2.5 x D	M3-M10	DIN371	6G	V005	287	E
			2.5 x D	M2-M10	DIN371	6H	V007	289	E
			2.5 x D	M12-M20	DIN376	6G	V006	288	F
			2.5 x D	M3-M30	DIN376	6H	V008	290	F
		BLIND	3 x D	M3-M10	DIN371	6H	V025	297	G
			3 x D	M12-M20	DIN376	6H	V026	298	H
		THROUGH	3 x D	M3-M10	DIN371	6H	V001	285	I
			3 x D	M12-M20	DIN376	6H	V002	286	F
	MF	BLIND	2.5 x D	MF4-MF30	DIN374	6H	V038	303-304	D
		THROUGH	2.5 x D	MF4-MF30	DIN374	6H	V014	291	J
	UNC	BLIND	2.5 x D	UNC 4-UNC 5/8	DIN2184-1	2B	V040	305	C
		THROUGH	2.5 x D	UNC 4-UNC 5/8	DIN2184-1	2B	V017	292	K
	UNF	BLIND	2.5 x D	UNF 8-UNF 5/8	DIN2184-1	2B	V043	306	C
		THROUGH	2.5 x D	UNF 8-UNF 5/8	DIN2184-1	2B	V020	293	K
	G	BLIND	2.5 x D	G 1/8-G 1 1/2	DIN5156	NORMAL	V045	307	L
		THROUGH	2.5 x D	G 1/8-G 5/8	DIN5156	NORMAL	V023	294	M
	NPT	BOTH	1.5 x D	NPT 1/16-NPT 1	DIN/ANSI	NORMAL	V048	308	N
	NPTF	BOTH	1.5 x D	NPTF 1/16-NPTF 3/4	DIN/ANSI	NORMAL	V050	309	O

Forming taps

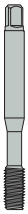
R


S


T

SMG	SMG	SMG	THREAD	TYPE	DEPTH	THREAD SIZE	DESIGN	TOLERANCE	TOOLTYPE	PAGE	Drawing
P	M	N	M	BOTH	3 x D	M3-M12	DIN2174	6GX	V058	312	R
				BOTH	3 x D	M3-M10	DIN2174	6HX	V053	310	R
				BOTH	3.5 x D	M3-M24	DIN2174	6HX	V055	311	S
			MF	BOTH	3 x D	MF5-MF16	DIN2174	6HX	V063	314	R
			M -A	BOTH	3.5 x D	M5-M12	DIN2174	6HX	V060-A	313	T

MTS-S005



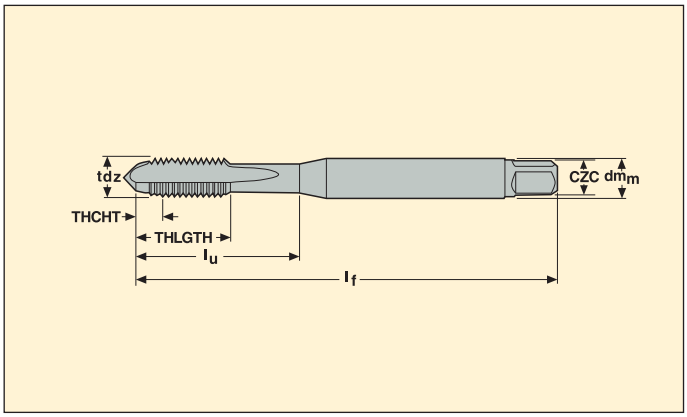

- For cutting data see page 276
- Coating TiCN
- Substrate HSS-E-PM

Part No.	Thread tdz	Pitch		Dimensions in mm					No. of flutes	BSG	tctr	THCHT
		mm	TPI	dm_m	l_u	THLGTH	l_f	CZC				
MTS- M3X0.50ISO6HX-XC-S005	M3	0,5	–	3,50	18	8,9	56	3.50X2.70	3	DIN 371	6HX	C
MTS- M4X0.70ISO6HX-XC-S005	M4	0,7	–	4,50	21	11,7	63	4.50X3.40	4	DIN 371	6HX	C
MTS- M5X0.80ISO6HX-XC-S005	M5	0,8	–	6,00	25	12,6	70	6.00X4.90	4	DIN 371	6HX	C
MTS- M6X1.00ISO6HX-XC-S005	M6	1	–	6,00	30	14,5	80	6.00X4.90	4	DIN 371	6HX	C
MTS- M8X1.25ISO6HX-XC-S005	M8	1,25	–	8,00	35	18,1	90	8.00X6.20	4	DIN 371	6HX	C
MTS- M10X1.50ISO6HX-XC-S005	M10	1,5	–	10,00	39	20,1	100	10.00X8.00	4	DIN 371	6HX	C

Please check availability in current price and stock-list.

MTS-S010



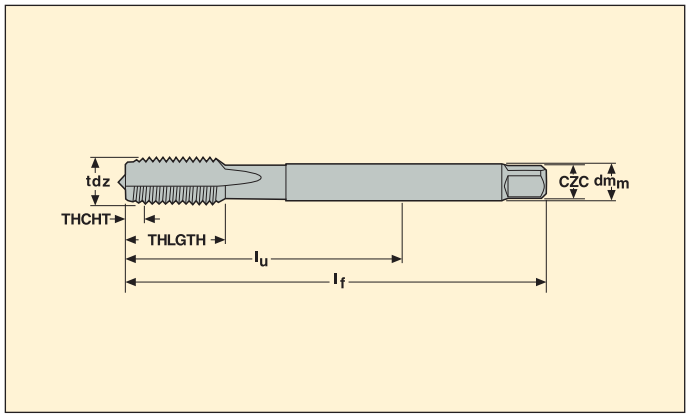

- For cutting data see page 276
- Coating TiCN
- Substrate HSS-E-PM

Part No.	Thread tdz	Pitch		Dimensions in mm					No. of flutes	BSG	tctr	THCHT
		mm	TPI	dm_m	l_u	THLGTH	l_f	CZC				
MTS- M8X1.25ISO6HX-XC-S010	M8	1,25	–	6,00	67	18	90	6.00X4.90	4	DIN 376	6HX	C
MTS- M10X1.50ISO6HX-XC-S010	M10	1,5	–	7,00	77	20	100	7.00X5.50	4	DIN 376	6HX	C
MTS- M12X1.75ISO6HX-XC-S010	M12	1,75	–	9,00	83	23	110	9.00X7.00	4	DIN 376	6HX	C
MTS- M14X2.00ISO6HX-XC-S010	M14	2	–	11,00	81	25	110	11.00X9.00	4	DIN 376	6HX	C
MTS- M16X2.00ISO6HX-XC-S010	M16	2	–	12,00	68	25	110	12.00X9.00	4	DIN 376	6HX	C
MTS- M18X2.50ISO6HX-XC-S010	M18	2,5	–	14,00	81	30	125	14.00X11.00	4	DIN 376	6HX	C
MTS- M20X2.50ISO6HX-XC-S010	M20	2,5	–	16,00	95	30	140	16.00X12.00	4	DIN 376	6HX	C
MTS- M22X2.50ISO6HX-XC-S010	M22	2,5	–	18,00	93	34	140	18.00X14.50	4	DIN 376	6HX	C
MTS- M24X3.00ISO6HX-XC-S010	M24	3	–	18,00	113	38	160	18.00X14.50	4	DIN 376	6HX	C

Please check availability in current price and stock-list.

MTH-V001



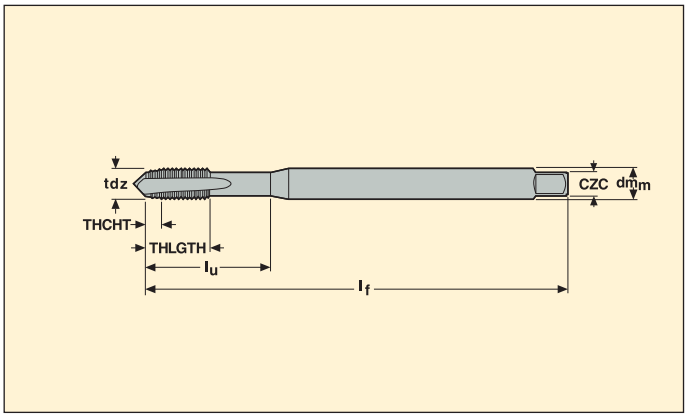

- For cutting data see page 276
- Coating TiN
- Substrate HSS-E

Part No.	Thread tdz	Pitch		Dimensions in mm					No. of flutes	BSG	tctr	THCHT
		mm	TPI	dm_m	l_u	THLGTH	l_f	CZC				
MTH- M3X0.50ISO6H-TB-V001	M3	0,5	–	3,50	18	9	112	3.50X2.70	3	DIN 371	6H	B
MTH- M4X0.70ISO6H-TB-V001	M4	0,7	–	4,50	21	12	112	4.50X3.40	3	DIN 371	6H	B
MTH- M5X0.80ISO6H-TB-V001	M5	0,8	–	6,00	25	13	125	6.00X4.90	3	DIN 371	6H	B
MTH- M6X1.00ISO6H-TB-V001	M6	1	–	6,00	30	15	125	6.00X4.90	3	DIN 371	6H	B
MTH- M8X1.25ISO6H-TB-V001	M8	1,25	–	8,00	40	18	140	8.00X6.20	3	DIN 371	6H	B
MTH- M10X1.50ISO6H-TB-V001	M10	1,5	–	10,00	50	20	160	10.00X8.00	3	DIN 371	6H	B

Please check availability in current price and stock-list.

MTH-V002



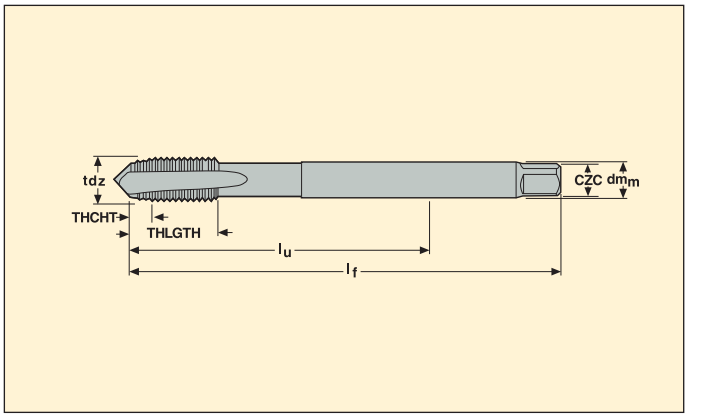

- For cutting data see page 276
- Coating TiN
- Substrate HSS-E

Part No.	Thread tdz	Pitch		Dimensions in mm					No. of flutes	BSG	tctr	THCHT
		mm	TPI	dm_m	l_u	THLGTH	l_f	CZC				
MTH- M12X1.75ISO6H-TB-V002	M12	1,75	–	9,00	153	23	180	9.00X7.00	3	DIN 376	6H	B
MTH- M14X2.00ISO6H-TB-V002	M14	2	–	11,00	151	25	180	11.00X9.00	3	DIN 376	6H	B
MTH- M16X2.00ISO6H-TB-V002	M16	2	–	12,00	158	25	200	12.00X9.00	3	DIN 376	6H	B
MTH- M20X2.50ISO6H-TB-V002	M20	2,5	–	16,00	179	30	224	16.00X12.00	4	DIN 376	6H	B

Please check availability in current price and stock-list.

MTH-V005



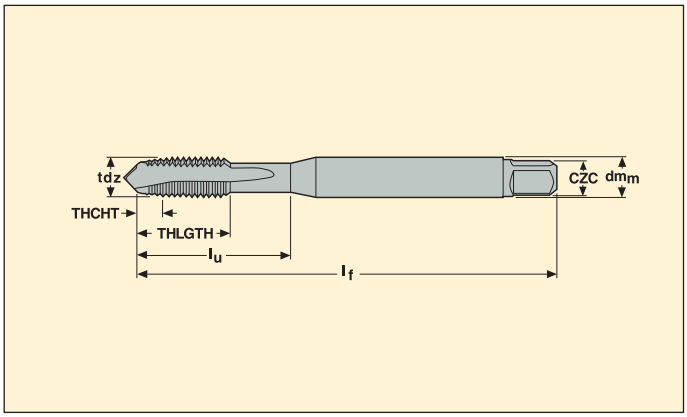

- For cutting data see page 276
- Coating TiN
- Substrate HSS-PM

Part No.	Thread tdz	Pitch		Dimensions in mm					No. of flutes	BSG	tctr	THCHT
		mm	TPI	dm_m	l_u	THLGTH	l_f	CZC				
MTH- M3X0.50ISO6G-TB-V005	M3	0,5	–	3,50	18	8,9	56	3.50X2.70	3	DIN 371	6G	B
MTH- M4X0.70ISO6G-TB-V005	M4	0,7	–	4,50	21	11,7	63	4.50X3.40	3	DIN 371	6G	B
MTH- M5X0.80ISO6G-TB-V005	M5	0,8	–	6,00	25	12,6	70	6.00X4.90	3	DIN 371	6G	B
MTH- M6X1.00ISO6G-TB-V005	M6	1	–	6,00	30	14,5	80	6.00X4.90	3	DIN 371	6G	B
MTH- M8X1.25ISO6G-TB-V005	M8	1,25	–	8,00	35	17,4	90	8.00X6.20	3	DIN 371	6G	B
MTH- M10X1.50ISO6G-TB-V005	M10	1,5	–	10,00	39	19,2	100	10.00X8.00	3	DIN 371	6G	B

Please check availability in current price and stock-list.

MTH-V006



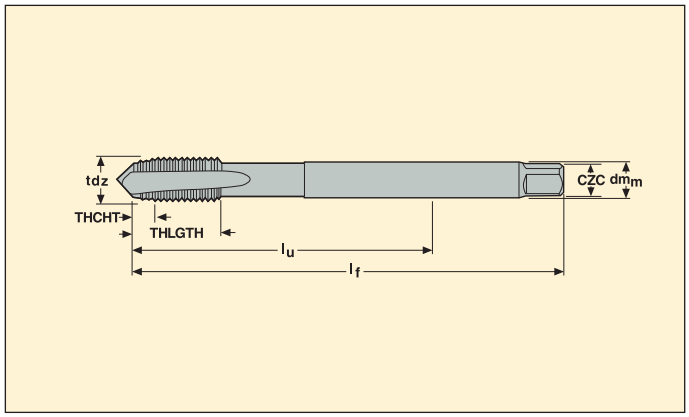

- For cutting data see page 276
- Coating TiN
- Substrate HSS-PM ≤ M16, HSS-E > M16

Part No.	Thread tdz	Pitch		Dimensions in mm					No. of flutes	BSG	tctr	THCHT
		mm	TPI	dm_m	l_u	THLGTH	l_f	CZC				
MTH- M12X1.75ISO6G-TB-V006	M12	1,75	–	9,00	83	23	110	9.00X7.00	3	DIN 376	6G	B
MTH- M16X2.00ISO6G-TB-V006	M16	2	–	12,00	68	25	110	12.00X9.00	3	DIN 376	6G	B
MTH- M20X2.50ISO6G-TB-V006	M20	2,5	–	16,00	95	30	140	16.00X12.00	4	DIN 376	6G	B

Please check availability in current price and stock-list.

MTH-V007



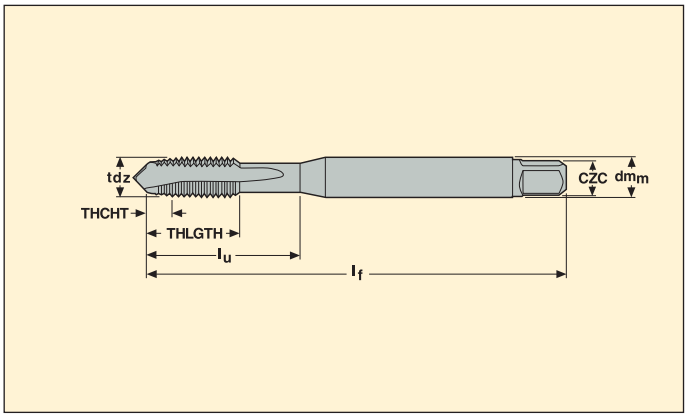

- For cutting data see page 276
- Coating TiN
- Substrate HSS-E ≤ M2,5, HSS-PM > M2,5

Part No.	Thread tdz	Pitch		Dimensions in mm					No. of flutes	BSG	tctr	THCHT
		mm	TPI	dm_m	l_u	THLGTH	l_f	CZC				
MTH- M2X0.40ISO6H-TB-V007	M2	0,4	–	2,80	9	6	45	2.80X2.10	2	DIN 371	6H	B
MTH- M2.5X0.45ISO6H-TB-V007	M2.5	0,45	–	2,80	12,5	8	50	2.80X2.10	2	DIN 371	6H	B
MTH- M3X0.50ISO6H-TB-V007	M3	0,5	–	3,50	18	8,9	56	3.50X2.70	3	DIN 371	6H	B
MTH- M3.5X0.60ISO6H-TB-V007	M3.5	0,6	–	4,00	20	10,8	56	4.00X3.00	3	DIN 371	6H	B
MTH- M4X0.70ISO6H-TB-V007	M4	0,7	–	4,50	21	11,7	63	4.50X3.40	3	DIN 371	6H	B
MTH- M4.5X0.75ISO6H-TB-V007	M4.5	0,75	–	6,00	25	12,6	70	6.00X4.90	3	DIN 371	6H	B
MTH- M5X0.80ISO6H-TB-V007	M5	0,8	–	6,00	25	12,6	70	6.00X4.90	3	DIN 371	6H	B
MTH- M6X1.00ISO6H-TB-V007	M6	1	–	6,00	30	14,5	80	6.00X4.90	3	DIN 371	6H	B
MTH- M7X1.00ISO6H-TB-V007	M7	1	–	7,00	30	14,5	80	7.00X5.50	3	DIN 371	6H	B
MTH- M8X1.25ISO6H-TB-V007	M8	1,25	–	8,00	35	17,4	90	8.00X6.20	3	DIN 371	6H	B
MTH- M10X1.50ISO6H-TB-V007	M10	1,5	–	10,00	39	19,2	100	10.00X8.00	3	DIN 371	6H	B

Please check availability in current price and stock-list.

MTH-V008



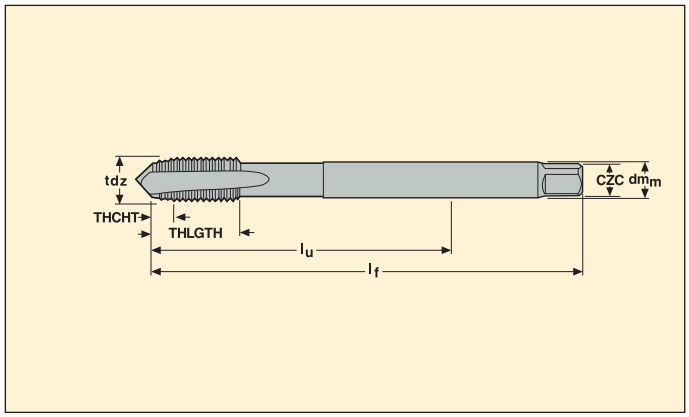

- For cutting data see page 276
- Coating TiN
- Substrate HSS-PM ≤ M16, HSS-E > M16

Part No.	Thread tdz	Pitch		Dimensions in mm					No. of flutes	BSG	tctr	THCHT
		mm	TPI	dm_m	l_u	THLGTH	l_f	CZC				
MTH- M3X0.50ISO6H-TB-V008	M3	0,5	–	2,20	37	9,5	56	2.20X1.80	3	DIN 376	6H	B
MTH- M4X0.70ISO6H-TB-V008	M4	0,7	–	2,80	43	11,9	63	2.80X2.10	3	DIN 376	6H	B
MTH- M5X0.80ISO6H-TB-V008	M5	0,8	–	3,50	49	13,2	70	3.50X2.70	3	DIN 376	6H	B
MTH- M6X1.00ISO6H-TB-V008	M6	1	–	4,50	59	15,1	80	4.50X3.40	3	DIN 376	6H	B
MTH- M8X1.25ISO6H-TB-V008	M8	1,25	–	6,00	67	18	90	6.00X4.90	3	DIN 376	6H	B
MTH- M10X1.50ISO6H-TB-V008	M10	1,5	–	7,00	77	19,8	100	7.00X5.50	3	DIN 376	6H	B
MTH- M12X1.75ISO6H-TB-V008	M12	1,75	–	9,00	83	23	110	9.00X7.00	3	DIN 376	6H	B
MTH- M14X2.00ISO6H-TB-V008	M14	2	–	11,00	81	25	110	11.00X9.00	3	DIN 376	6H	B
MTH- M16X2.00ISO6H-TB-V008	M16	2	–	12,00	68	25	110	12.00X9.00	3	DIN 376	6H	B
MTH- M18X2.50ISO6H-TB-V008	M18	2,5	–	14,00	81	30	125	14.00X11.00	4	DIN 376	6H	B
MTH- M20X2.50ISO6H-TB-V008	M20	2,5	–	16,00	95	30	140	16.00X12.00	4	DIN 376	6H	B
MTH- M22X2.50ISO6H-TB-V008	M22	2,5	–	18,00	93	34	140	18.00X14.50	4	DIN 376	6H	B
MTH- M24X3.00ISO6H-TB-V008	M24	3	–	18,00	113	38	160	18.00X14.50	4	DIN 376	6H	B
MTH- M27X3.00ISO6H-TB-V008	M27	3	–	20,00	97	38	160	20.00X16.00	4	DIN 376	6H	B
MTH- M30X3.50ISO6H-TB-V008	M30	3,5	–	22,00	115	45	180	22.00X18.00	4	DIN 376	6H	B

Please check availability in current price and stock-list.

MTH-V014



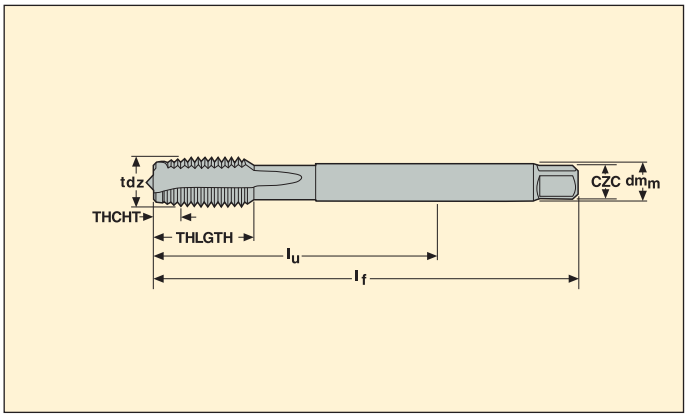

- For cutting data see page 276
- Coating TiN
- Substrate HSS-PM ≤ M16, HSS-E > M16

Part No.	Thread tdz	Pitch mm	Pitch TPI	Dimensions in mm dm_m	l_u	THLGTH	l_f	CZC	No. of flutes	BSG	tctr	THCHT
MTH- M4X0.50ISO6H-TB-V014	MF 4x0.5	0,5	–	2,80	43	11,9	63	2.80X2.10	3	DIN 374	6H	B
MTH- M5X0.50ISO6H-TB-V014	MF 5x0.5	0,5	–	3,50	49	13,2	70	3.50X2.70	3	DIN 374	6H	B
MTH- M6X0.75ISO6H-TB-V014	MF 6x0.75	0,75	–	4,50	59	15,1	80	4.50X3.40	3	DIN 374	6H	B
MTH- M8X0.75ISO6H-TB-V014	MF 8x0.75	0,75	–	6,00	57	14,9	80	6.00X4.90	3	DIN 374	6H	B
MTH- M8X1.00ISO6H-TB-V014	MF 8x1.0	1	–	6,00	67	18	90	6.00X4.90	3	DIN 374	6H	B
MTH- M10X0.75ISO6H-TB-V014	MF 10x0.75	0,75	–	7,00	67	17,6	90	7.00X5.50	3	DIN 374	6H	B
MTH- M10X1.00ISO6H-TB-V014	MF 10x1.0	1	–	7,00	67	17,6	90	7.00X5.50	3	DIN 374	6H	B
MTH- M10X1.25ISO6H-TB-V014	MF 10x1.25	1,25	–	7,00	77	19,8	100	7.00X5.50	3	DIN 374	6H	B
MTH- M12X1.00ISO6H-TB-V014	MF 12x1.0	1	–	9,00	73	21	100	9.00X7.00	3	DIN 374	6H	B
MTH- M12X1.25ISO6H-TB-V014	MF 12x1.25	1,25	–	9,00	73	21	100	9.00X7.00	3	DIN 374	6H	B
MTH- M12X1.50ISO6H-TB-V014	MF 12x1.5	1,5	–	9,00	73	21	100	9.00X7.00	3	DIN 374	6H	B
MTH- M14X1.00ISO6H-TB-V014	MF 14x1.0	1	–	11,00	71	21	100	11.00X9.00	3	DIN 374	6H	B
MTH- M14X1.25ISO6H-TB-V014	MF 14x1.25	1,25	–	11,00	71	21	100	11.00X9.00	3	DIN 374	6H	B
MTH- M14X1.50ISO6H-TB-V014	MF 14x1.5	1,5	–	11,00	71	21	100	11.00X9.00	3	DIN 374	6H	B
MTH- M16X1.00ISO6H-TB-V014	MF 16x1.0	1	–	12,00	58	21	100	12.00X9.00	3	DIN 374	6H	B
MTH- M16X1.50ISO6H-TB-V014	MF 16x1.5	1,5	–	12,00	58	21	100	12.00X9.00	3	DIN 374	6H	B
MTH- M18X1.00ISO6H-TB-V014	MF 18x1.0	1	–	14,00	66	24	110	14.00X11.00	4	DIN 374	6H	B
MTH- M18X1.50ISO6H-TB-V014	MF 18x1.5	1,5	–	14,00	66	24	110	14.00X11.00	4	DIN 374	6H	B
MTH- M20X1.00ISO6H-TB-V014	MF 20x1.0	1	–	16,00	80	24	125	16.00X12.00	4	DIN 374	6H	B
MTH- M20X1.50ISO6H-TB-V014	MF 20x1.5	1,5	–	16,00	80	24	125	16.00X12.00	4	DIN 374	6H	B
MTH- M22X1.50ISO6H-TB-V014	MF 22x1.5	1,5	–	18,00	78	25	125	18.00X14.50	4	DIN 374	6H	B
MTH- M24X1.50ISO6H-TB-V014	MF 24x1.5	1,5	–	18,00	93	28	140	18.00X14.50	4	DIN 374	6H	B
MTH- M24X2.00ISO6H-TB-V014	MF 24x2.0	2	–	18,00	93	28	140	18.00X14.50	4	DIN 374	6H	B
MTH- M25X1.50ISO6H-TB-V014	MF 25x1.5	1,5	–	18,00	93	28	140	18.00X14.50	4	DIN 374	6H	B
MTH- M26X1.50ISO6H-TB-V014	MF 26x1.5	1,5	–	18,00	93	28	140	18.00X14.50	4	DIN 374	6H	B
MTH- M27X1.50ISO6H-TB-V014	MF 27x1.5	1,5	–	20,00	77	28	140	20.00X16.00	4	DIN 374	6H	B
MTH- M27X2.00ISO6H-TB-V014	MF 27x2.0	2	–	20,00	77	28	140	20.00X16.00	4	DIN 374	6H	B
MTH- M28X1.50ISO6H-TB-V014	MF 28x1.5	1,5	–	20,00	77	28	140	20.00X16.00	4	DIN 374	6H	B
MTH- M30X1.50ISO6H-TB-V014	MF 30x1.5	1,5	–	22,00	85	28	150	22.00X18.00	4	DIN 374	6H	B
MTH- M30X2.00ISO6H-TB-V014	MF 30x2.0	2	–	22,00	85	28	150	22.00X18.00	4	DIN 374	6H	B

Please check availability in current price and stock-list.

MTH-V017



- For cutting data see page 276
- Coating TiN
- Substrate HSS-PM

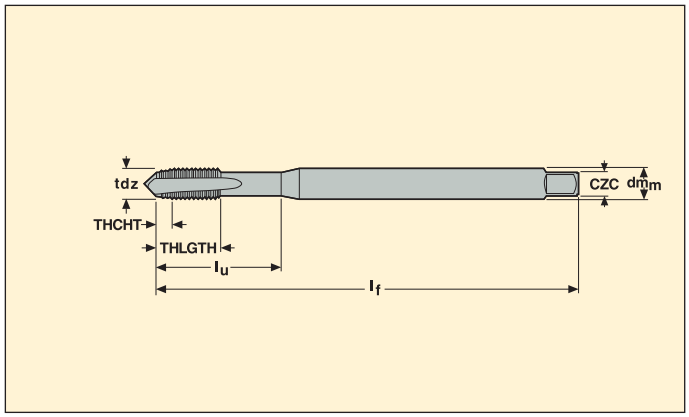

Part No.	Thread tdz	Pitch		Dimensions in mm					No. of flutes	BSG	tctr	THCHT
		mm	TPI	dm_m	l_u	THLGTH	l_f	CZC				
MTH- 4-40UNC-TB-V017	UNC 4-40	–	40	3,50	18	8,5	56	3.50X2.70	3	DIN 2184-1	2B	B
MTH- 5-40UNC-TB-V017	UNC 5-40	–	40	3,50	18	9,5	56	3.50X2.70	3	DIN 2184-1	2B	B
MTH- 6-32UNC-TB-V017	UNC 6-32	–	32	4,00	20	10,4	56	4.00X3.00	3	DIN 2184-1	2B	B
MTH- 8-32UNC-TB-V017	UNC 8-32	–	32	4,50	21	11,4	63	4.50X3.40	3	DIN 2184-1	2B	B
MTH- 10-24UNC-TB-V017	UNC 10-24	–	24	6,00	25	12,2	70	6.00X4.90	3	DIN 2184-1	2B	B
MTH- 12-24UNC-TB-V017	UNC 12-24	–	24	6,00	30	14,2	80	6.00X4.90	3	DIN 2184-1	2B	B
MTH- 1/4-20UNC-TB-V017	UNC 1/4-20	–	20	7,00	30	14,1	80	7.00X5.50	3	DIN 2184-1	2B	B
MTH- 5/16-18UNC-TB-V017	UNC 5/16-18	–	18	8,00	35	17,4	90	8.00X6.20	3	DIN 2184-1	2B	B
MTH- 3/8-16UNC-TB-V017	UNC 3/8-16	–	16	10,00	39	18,9	100	10.00X8.00	3	DIN 2184-1	2B	B
MTH- 7/16-14UNC-TB-V017	UNC 7/16-14	–	14	8,00	76	20	100	8.00X6.20	3	DIN 2184-1	2B	B
MTH- 1/2-13UNC-TB-V017	UNC 1/2-13	–	13	9,00	83	23	110	9.00X7.00	3	DIN 2184-1	2B	B
MTH- 5/8-11UNC-TB-V017	UNC 5/8-11	–	11	12,00	68	25	110	12.00X9.00	3	DIN 2184-1	2B	B

Please check availability in current price and stock-list.

MTH-V020



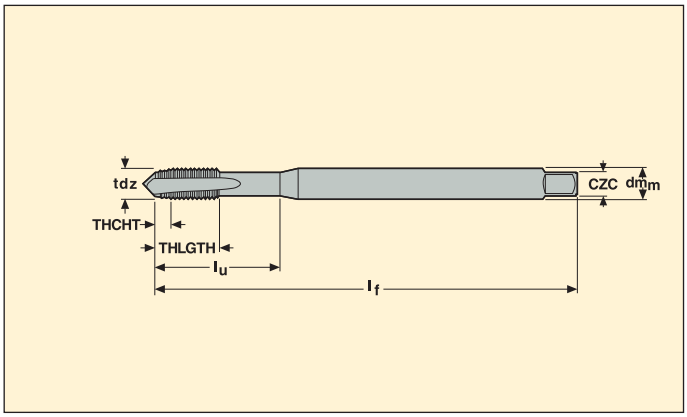

- For cutting data see page 276
- Coating TiN
- Substrate HSS-PM

Part No.	Thread tdz	Pitch		Dimensions in mm					No. of flutes	BSG	tctr	THCHT
		mm	TPI	dm_m	l_u	THLGTH	l_f	CZC				
MTH- 8-36UNF-TB-V020	UNF 8-36	–	36	4,50	21	11,4	63	4.50X3.40	3	DIN 2184-1	2B	B
MTH- 10-32UNF-TB-V020	UNF 10-32	–	32	6,00	25	12,2	70	6.00X4.90	3	DIN 2184-1	2B	B
MTH- 1/4-28UNF-TB-V020	UNF 1/4-28	–	28	7,00	30	14,1	80	7.00X5.50	3	DIN 2184-1	2B	B
MTH- 5/16-24UNF-TB-V020	UNF 5/16-24	–	24	8,00	35	17,4	90	8.00X6.20	3	DIN 2184-1	2B	B
MTH- 7/16-20UNF-TB-V020	UNF 7/16-20	–	20	8,00	76	20	100	8.00X6.20	3	DIN 2184-1	2B	B
MTH- 1/2-20UNF-TB-V020	UNF 1/2-20	–	20	9,00	83	23	110	9.00X7.00	3	DIN 2184-1	2B	B
MTH- 5/8-18UNF-TB-V020	UNF 5/8-18	–	18	12,00	68	25	110	12.00X9.00	3	DIN 2184-1	2B	B

Please check availability in current price and stock-list.

MTH-V023



- For cutting data see page 276
- Coating TiN
- Substrate HSS-PM

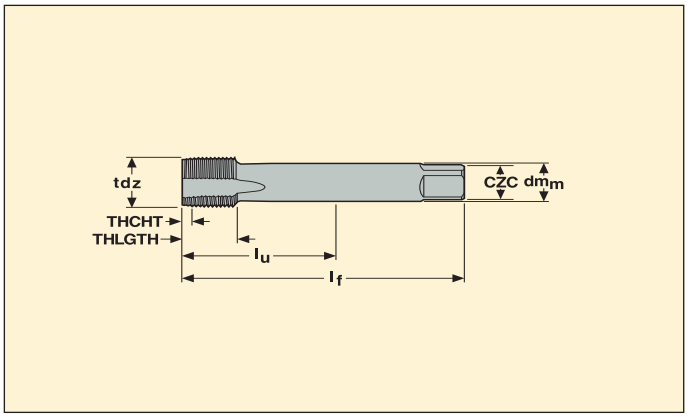

Part No.	Thread tdz	Pitch		Dimensions in mm					No. of flutes	BSG	tctr	THCHT
		mm	TPI	dm_m	l_u	THLGTH	l_f	CZC				
MTH- 1/8-28G-TB-V023	G 1/8-28	–	28	7,00	67	17,6	90	7.00X5.50	3	DIN 5156	NORMAL	B
MTH- 1/4-19G-TB-V023	G 1/4-19	–	19	11,00	71	21	100	11.00X9.00	3	DIN 5156	NORMAL	B
MTH- 3/8-19G-TB-V023	G 3/8-19	–	19	12,00	58	21	100	12.00X9.00	4	DIN 5156	NORMAL	B
MTH- 1/2-14G-TB-V023	G 1/2-14	–	14	16,00	80	24	125	16.00X12.00	4	DIN 5156	NORMAL	B
MTH- 5/8-14G-TB-V023	G 5/8-14	–	14	18,00	78	24	125	18.00X14.50	4	DIN 5156	NORMAL	B

Please check availability in current price and stock-list.

MTH-S015



- For cutting data see page 276
- Coating TiN
- Substrate HSS-E

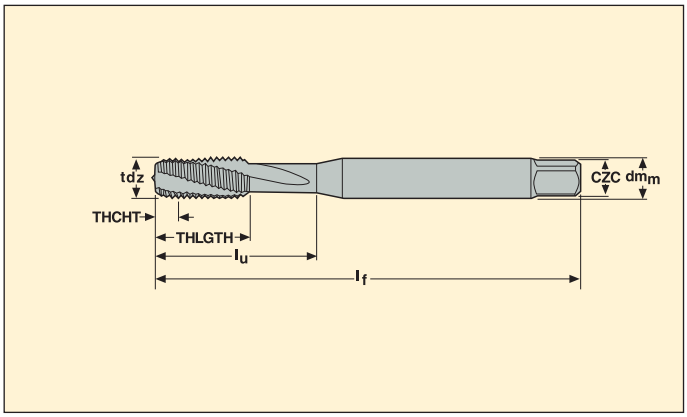

Part No.	Thread tdz	Pitch mm	Pitch TPI	Dimensions in mm dm_m	l_u	THLGTH	l_f	CZC	No. of flutes	BSG	tctr	THCHT
MTH- M3X0.50ISO6H-BC-S015	M3	0,5	–	3,50	18	9	56	3.50X2.70	3	DIN 371	6H	C
MTH- M4X0.70ISO6H-BC-S015	M4	0,7	–	4,50	21	11	63	4.50X3.40	3	DIN 371	6H	C
MTH- M5X0.80ISO6H-BC-S015	M5	0,8	–	6,00	25	13	70	6.00X4.90	3	DIN 371	6H	C
MTH- M6X1.00ISO6H-BC-S015	M6	1	–	6,00	30	15	80	6.00X4.90	3	DIN 371	6H	C
MTH- M8X1.25ISO6H-BC-S015	M8	1,25	–	8,00	35	18	90	8.00X6.20	3	DIN 371	6H	C
MTH- M10X1.50ISO6H-BC-S015	M10	1,5	–	10,00	39	20	100	10.00X8.00	3	DIN 371	6H	C

Please check availability in current price and stock-list.

MTH-S020



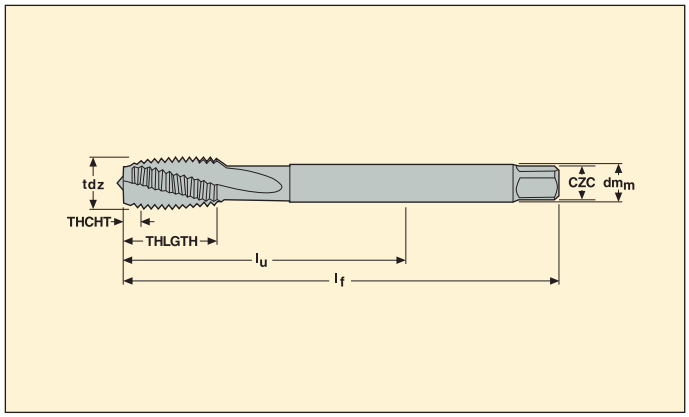

- For cutting data see page 276
- Coating TiN
- Substrate HSS-E

Part No.	Thread tdz	Pitch		Dimensions in mm					No. of flutes	BSG	tctr	THCHT
		mm	TPI	dm_m	l_u	THLGTH	l_f	CZC				
MTH- M12X1.75ISO6H-BC-S020	M12	1,75	–	9,00	83	23	110	9.00X7.00	3	DIN 376	6H	C
MTH- M14X2.00ISO6H-BC-S020	M14	2	–	11,00	81	25	110	11.00X9.00	3	DIN 376	6H	C
MTH- M16X2.00ISO6H-BC-S020	M16	2	–	12,00	68	25	110	12.00X9.00	3	DIN 376	6H	C
MTH- M18X2.50ISO6H-BC-S020	M18	2,5	–	14,00	81	30	125	14.00X11.00	3	DIN 376	6H	C
MTH- M20X2.50ISO6H-BC-S020	M20	2,5	–	16,00	95	30	140	16.00X12.00	3	DIN 376	6H	C
MTH- M22X2.50ISO6H-BC-S020	M22	2,5	–	18,00	93	34	140	18.00X14.50	4	DIN 376	6H	C
MTH- M24X3.00ISO6H-BC-S020	M24	3	–	18,00	113	38	160	18.00X14.50	4	DIN 376	6H	C
MTH- M27X3.00ISO6H-BC-S020	M27	3	–	20,00	97	38	160	20.00X16.00	4	DIN 376	6H	C
MTH- M30X3.50ISO6H-BC-S020	M30	3,5	–	22,00	115	45	180	22.00X18.00	4	DIN 376	6H	C
MTH- M33X3.50ISO6H-BC-S020	M33	3,5	–	25,00	113	50	180	25.00X20.00	4	DIN 376	6H	C
MTH- M36X4.00ISO6H-BC-S020	M36	4	–	28,00	131	55	200	28.00X22.00	4	DIN 376	6H	C

Please check availability in current price and stock-list.

MTH-V025



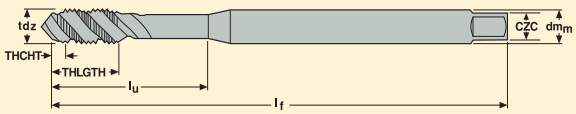

- For cutting data see page 276
- Coating TiN
- Substrate HSS-E

Part No.	Thread tdz	Pitch		Dimensions in mm					No. of flutes	BSG	tctr	THCHT
		mm	TPI	dm_m	l_u	THLGTH	l_f	CZC				
MTH- M3X0.50ISO6H-BC-V025	M3	0,5	–	3,50	18	6	112	3.50X2.70	3	DIN 371	6H	C
MTH- M4X0.70ISO6H-BC-V025	M4	0,7	–	4,50	21	7	112	4.50X3.40	3	DIN 371	6H	C
MTH- M5X0.80ISO6H-BC-V025	M5	0,8	–	6,00	25	8	125	6.00X4.90	3	DIN 371	6H	C
MTH- M6X1.00ISO6H-BC-V025	M6	1	–	6,00	30	10	125	6.00X4.90	3	DIN 371	6H	C
MTH- M8X1.25ISO6H-BC-V025	M8	1,25	–	8,00	40	13	140	8.00X6.20	3	DIN 371	6H	C
MTH- M10X1.50ISO6H-BC-V025	M10	1,5	–	10,00	50	15	160	10.00X8.00	3	DIN 371	6H	C

Please check availability in current price and stock-list.

MTH-V026



- For cutting data see page 276
- Coating TiN
- Substrate HSS-E

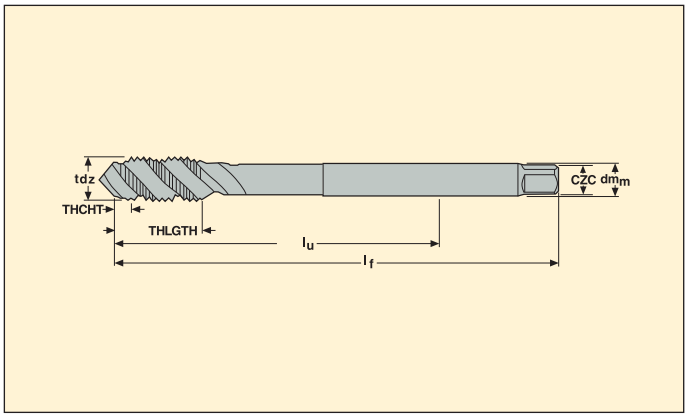

Part No.	Thread tdz	Pitch mm	Pitch TPI	Dimensions in mm dm_m	l_u	THLGTH	l_f	CZC	No. of flutes	BSG	tctr	THCHT
MTH- M12X1.75ISO6H-BC-V026	M12	1,75	–	9,00	153	16	180	9.00X7.00	3	DIN 376	6H	C
MTH- M14X2.00ISO6H-BC-V026	M14	2	–	11,00	151	20	180	11.00X9.00	3	DIN 376	6H	C
MTH- M16X2.00ISO6H-BC-V026	M16	2	–	12,00	158	20	200	12.00X9.00	3	DIN 376	6H	C
MTH- M20X2.50ISO6H-BC-V026	M20	2,5	–	16,00	179	25	224	16.00X12.00	4	DIN 376	6H	C

Please check availability in current price and stock-list.

MTH-V028



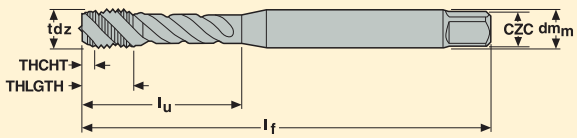

- For cutting data see page 276
- Coating TiN
- Substrate HSS-PM

Part No.	Thread tdz	Pitch		Dimensions in mm					No. of flutes	BSG	tctr	THCHT
		mm	TPI	dm_m	l_u	THLGTH	l_f	CZC				
MTH- M3X0.50ISO6G-BC-V028	M3	0,5	–	3,50	18	5,9	56	3.50X2.70	3	DIN 371	6G	C
MTH- M4X0.70ISO6G-BC-V028	M4	0,7	–	4,50	21	6,7	63	4.50X3.40	3	DIN 371	6G	C
MTH- M5X0.80ISO6G-BC-V028	M5	0,8	–	6,00	25	7,7	70	6.00X4.90	3	DIN 371	6G	C
MTH- M6X1.00ISO6G-BC-V028	M6	1	–	6,00	31	10	80	6.00X4.90	3	DIN 371	6G	C
MTH- M8X1.25ISO6G-BC-V028	M8	1,25	–	8,00	35	11,6	90	8.00X6.20	3	DIN 371	6G	C
MTH- M10X1.50ISO6G-BC-V028	M10	1,5	–	10,00	39	15,1	100	10.00X8.00	3	DIN 371	6G	C

Please check availability in current price and stock-list.

MTH-V029



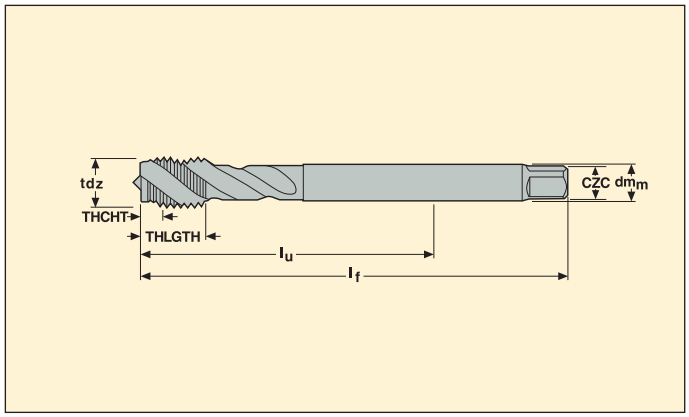

- For cutting data see page 276
- Coating TiN
- Substrate HSS-PM ≤ M16, HSS-E > M16

Part No.	Thread tdz	Pitch		Dimensions in mm					No. of flutes	BSG	tctr	THCHT
		mm	TPI	dm_m	l_u	THLGTH	l_f	CZC				
MTH- M12X1.75ISO6G-BC-V029	M12	1,75	–	9,00	83	16	110	9.00X7.00	3	DIN 376	6G	C
MTH- M14X2.00ISO6G-BC-V029	M14	2	–	11,00	81	20	110	11.00X9.00	3	DIN 376	6G	C
MTH- M16X2.00ISO6G-BC-V029	M16	2	–	12,00	68	20	110	12.00X9.00	4	DIN 376	6G	C
MTH- M20X2.50ISO6G-BC-V029	M20	2,5	–	16,00	95	25	140	16.00X12.00	4	DIN 376	6G	C

Please check availability in current price and stock-list.

MTH-V030



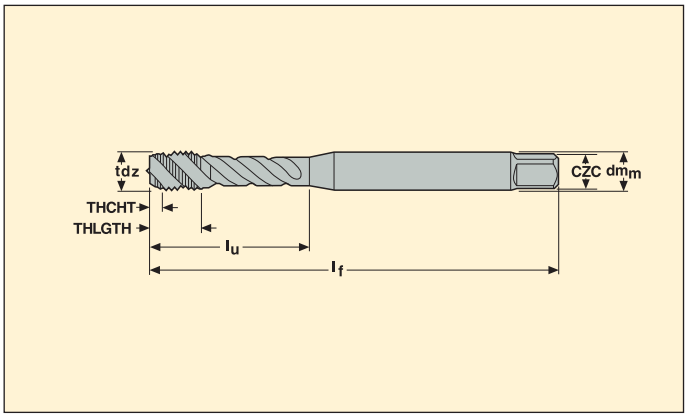

- For cutting data see page 276
- Coating TiN
- Substrate HSS-E ≤ M2,5, HSS-PM >2,5

Part No.	Thread tdz	Pitch		Dimensions in mm					No. of flutes	BSG	tctr	THCHT
		mm	TPI	dm_m	l_u	THLGTH	l_f	CZC				
MTH- M2X0.40ISO6H-BC-V030	M2	0,4	–	2,80	9	4	45	2.80X2.10	3	DIN 371	6H	C
MTH- M2.5X0.45ISO6H-BC-V030	M2.5	0,45	–	2,80	12,5	4	50	2.80X2.10	3	DIN 371	6H	C
MTH- M3X0.50ISO6H-BC-V030	M3	0,5	–	3,50	18	5,9	56	3.50X2.70	3	DIN 371	6H	C
MTH- M3.5X0.60ISO6H-BC-V030	M3.5	0,6	–	4,00	20	6,3	56	4.00X3.00	3	DIN 371	6H	C
MTH- M4X0.70ISO6H-BC-V030	M4	0,7	–	4,50	21	6,7	63	4.50X3.40	3	DIN 371	6H	C
MTH- M5X0.80ISO6H-BC-V030	M5	0,8	–	6,00	21	7,7	70	6.00X4.90	3	DIN 371	6H	C
MTH- M6X1.00ISO6H-BC-V030	M6	1	–	6,00	31	10	80	6.00X4.90	3	DIN 371	6H	C
MTH- M7X1.00ISO6H-BC-V030	M7	1	–	7,00	31	10	80	7.00X5.50	3	DIN 371	6H	C
MTH- M8X1.25ISO6H-BC-V030	M8	1,25	–	8,00	35	11,6	90	8.00X6.20	3	DIN 371	6H	C
MTH- M10X1.50ISO6H-BC-V030	M10	1,5	–	10,00	39	15,1	100	10.00X8.00	3	DIN 371	6H	C

Please check availability in current price and stock-list.

MTH-V033



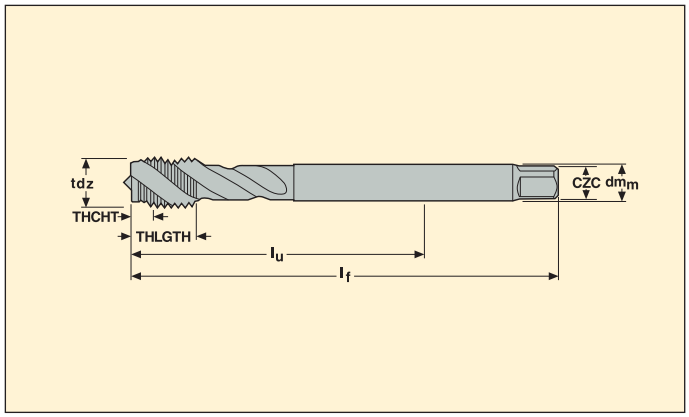

- For cutting data see page 276
- Coating TiN
- Substrate HSS-PM ≤ M16, HSS-E > M16

Part No.	Thread tdz	Pitch		Dimensions in mm					No. of flutes	BSG	tctr	THCHT
		mm	TPI	dm_m	l_u	THLGTH	l_f	CZC				
MTH- M6X1.00ISO6H-BC-V033	M6	1	–	4,50	59	10	80	4.50X3.40	3	DIN 376	6H	C
MTH- M8X1.25ISO6H-BC-V033	M8	1,25	–	6,00	67	13	90	6.00X4.90	3	DIN 376	6H	C
MTH- M10X1.50ISO6H-BC-V033	M10	1,5	–	7,00	77	15	100	7.00X5.50	3	DIN 376	6H	C
MTH- M12X1.75ISO6H-BC-V033	M12	1,75	–	9,00	83	16	110	9.00X7.00	3	DIN 376	6H	C
MTH- M14X2.00ISO6H-BC-V033	M14	2	–	11,00	81	20	110	11.00X9.00	3	DIN 376	6H	C
MTH- M16X2.00ISO6H-BC-V033	M16	2	–	12,00	68	20	110	12.00X9.00	4	DIN 376	6H	C
MTH- M18X2.50ISO6H-BC-V033	M18	2,5	–	14,00	81	25	125	14.00X11.00	4	DIN 376	6H	C
MTH- M20X2.50ISO6H-BC-V033	M20	2,5	–	16,00	95	25	140	16.00X12.00	4	DIN 376	6H	C
MTH- M22X2.50ISO6H-BC-V033	M22	2,5	–	18,00	93	25	140	18.00X14.50	4	DIN 376	6H	C
MTH- M24X3.00ISO6H-BC-V033	M24	3	–	18,00	113	30	160	18.00X14.50	4	DIN 376	6H	C
MTH- M27X3.00ISO6H-BC-V033	M27	3	–	20,00	97	30	160	20.00X16.00	4	DIN 376	6H	C
MTH- M30X3.50ISO6H-BC-V033	M30	3,5	–	22,00	115	36	180	22.00X18.00	4	DIN 376	6H	C
MTH- M33X3.50ISO6H-BC-V033	M33	3,5	–	25,00	113	36	180	25.00X20.00	4	DIN 376	6H	C
MTH- M36X4.00ISO6H-BC-V033	M36	4	–	28,00	131	40	200	28.00X22.00	4	DIN 376	6H	C

Please check availability in current price and stock-list.

MTH-V038



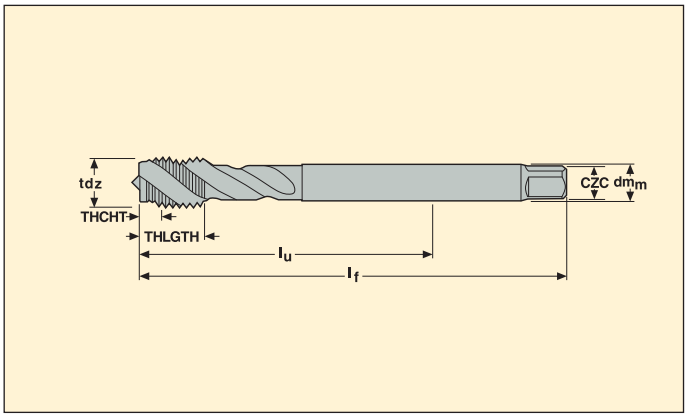

- For cutting data see page 276
- Coating TiN
- Substrate HSS-PM ≤ M16, HSS-E >16

Part No.	Thread tdz	Pitch		Dimensions in mm					No. of flutes	BSG	tctr	THCHT
		mm	TPI	dm_m	l_u	THLGTH	l_f	CZC				
MTH- M4X0.50ISO6H-BC-V038	MF 4x0.5	0,5	–	2,80	43	6,8	63	2.80X2.10	3	DIN 374	6H	C
MTH- M5X0.50ISO6H-BC-V038	MF 5x0.5	0,5	–	3,50	49	8,2	70	3.50X2.70	3	DIN 374	6H	C
MTH- M6X0.75ISO6H-BC-V038	MF 6x0.75	0,75	–	4,50	59	10	80	4.50X3.40	3	DIN 374	6H	C
MTH- M8X0.75ISO6H-BC-V038	MF 8x0.75	0,75	–	6,00	57	13	80	6.00X4.90	3	DIN 374	6H	C
MTH- M8X1.00ISO6H-BC-V038	MF 8x1.0	1	–	6,00	67	13	90	6.00X4.90	3	DIN 374	6H	C
MTH- M10X0.75ISO6H-BC-V038	MF 10x0.75	0,75	–	7,00	67	13	90	7.00X5.50	3	DIN 374	6H	C
MTH- M10X1.00ISO6H-BC-V038	MF 10x1.0	1	–	7,00	67	13	90	7.00X5.50	3	DIN 374	6H	C
MTH- M10X1.25ISO6H-BC-V038	MF 10x1.25	1,25	–	7,00	77	15	100	7.00X5.50	3	DIN 374	6H	C
MTH- M12X1.00ISO6H-BC-V038	MF 12x1.0	1	–	9,00	73	15	100	9.00X7.00	3	DIN 374	6H	C
MTH- M12X1.25ISO6H-BC-V038	MF 12x1.25	1,25	–	9,00	73	15	100	9.00X7.00	3	DIN 374	6H	C
MTH- M12X1.50ISO6H-BC-V038	MF 12x1.5	1,5	–	9,00	73	15	100	9.00X7.00	3	DIN 374	6H	C
MTH- M14X1.00ISO6H-BC-V038	MF 14x1.0	1	–	11,00	71	15	100	11.00X9.00	3	DIN 374	6H	C
MTH- M14X1.25ISO6H-BC-V038	MF 14x1.25	1,25	–	11,00	71	15	100	11.00X9.00	3	DIN 374	6H	C
MTH- M14X1.50ISO6H-BC-V038	MF 14x1.5	1,5	–	11,00	71	15	100	11.00X9.00	3	DIN 374	6H	C
MTH- M16X1.00ISO6H-BC-V038	MF 16x1.0	1	–	12,00	58	15	100	12.00X9.00	4	DIN 374	6H	C
MTH- M16X1.50ISO6H-BC-V038	MF 16x1.5	1,5	–	12,00	58	15	100	12.00X9.00	4	DIN 374	6H	C
MTH- M18X1.00ISO6H-BC-V038	MF 18x1.0	1	–	14,00	66	17	110	14.00X11.00	4	DIN 374	6H	C
MTH- M18X1.50ISO6H-BC-V038	MF 18x1.5	1,5	–	14,00	66	17	110	14.00X11.00	4	DIN 374	6H	C
MTH- M20X1.00ISO6H-BC-V038	MF 20x1.0	1	–	16,00	80	17	125	16.00X12.00	4	DIN 374	6H	C
MTH- M20X1.50ISO6H-BC-V038	MF 20x1.5	1,5	–	16,00	80	17	125	16.00X12.00	4	DIN 374	6H	C

Please check availability in current price and stock-list.

MTH-V038



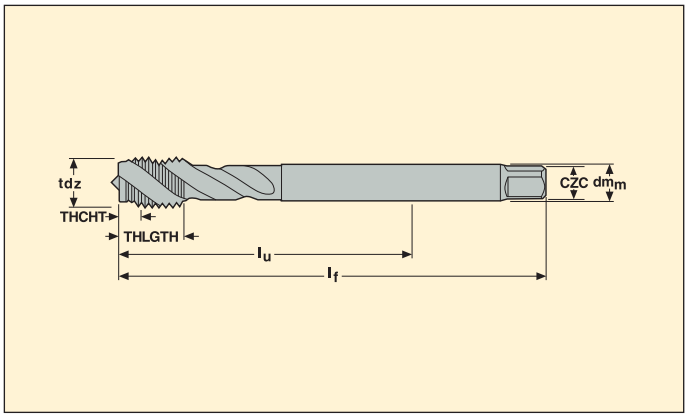

- For cutting data see page 276
- Coating TiN
- Substrate HSS-E-PM

Part No.	Thread tdz	Pitch		Dimensions in mm					No. of flutes	BSG	tctr	THCHT
		mm	TPI	dm_m	l_u	THLGTH	l_f	CZC				
MTH- M22X1.50ISO6H-BC-V038	MF 22x1.5	1,5	–	18,00	78	17	125	18.00X14.50	4	DIN 374	6H	C
MTH- M24X1.50ISO6H-BC-V038	MF 24x1.5	1,5	–	18,00	93	20	140	18.00X14.50	4	DIN 374	6H	C
MTH- M24X2.00ISO6H-BC-V038	MF 24x2.0	2	–	18,00	93	20	140	18.00X14.50	4	DIN 374	6H	C
MTH- M25X1.50ISO6H-BC-V038	MF 25x1.5	1,5	–	18,00	93	20	140	18.00X14.50	4	DIN 374	6H	C
MTH- M26X1.50ISO6H-BC-V038	MF 26x1.5	1,5	–	18,00	93	20	140	18.00X14.50	4	DIN 374	6H	C
MTH- M27X1.50ISO6H-BC-V038	MF 27x1.5	1,5	–	20,00	77	20	140	20.00X16.00	4	DIN 374	6H	C
MTH- M27X2.00ISO6H-BC-V038	MF 27x2.0	2	–	20,00	77	20	140	20.00X16.00	4	DIN 374	6H	C
MTH- M28X1.50ISO6H-BC-V038	MF 28x1.5	1,5	–	20,00	77	20	140	20.00X16.00	4	DIN 374	6H	C
MTH- M30X1.50ISO6H-BC-V038	MF 30x1.5	1,5	–	22,00	85	20	150	22.00X18.00	4	DIN 374	6H	C
MTH- M30X2.00ISO6H-BC-V038	MF 30x2.0	2	–	22,00	85	20	150	22.00X18.00	4	DIN 374	6H	C

Please check availability in current price and stock-list.

MTH-V040



- For cutting data see page 276
- Coating TiN
- Substrate HSS-PM

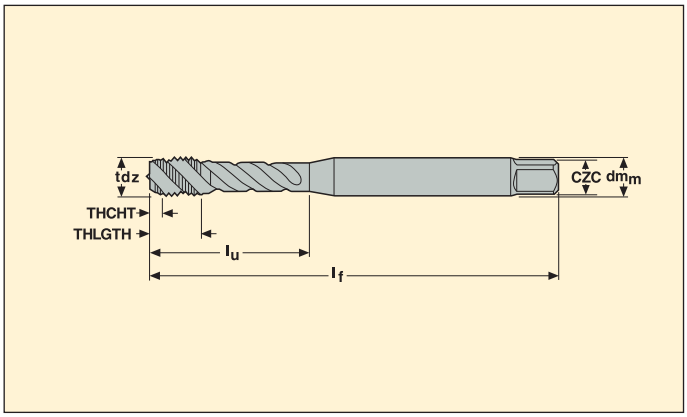

Part No.	Thread tdz	Pitch		Dimensions in mm					No. of flutes	BSG	tctr	THCHT
		mm	TPI	dm_m	l_u	THLGTH	l_f	CZC				
MTH- 4-40UNC-BC-V040	UNC 4-40	–	40	3,50	18	5,6	56	3.50X2.70	3	DIN 2184-1	2B	C
MTH- 5-40UNC-BC-V040	UNC 5-40	–	40	3,50	18	5,6	56	3.50X2.70	3	DIN 2184-1	2B	C
MTH- 6-32UNC-BC-V040	UNC 6-32	–	32	4,00	20	6,5	56	4.00X3.00	3	DIN 2184-1	2B	C
MTH- 8-32UNC-BC-V040	UNC 8-32	–	32	4,50	21	6,5	63	4.50X3.40	3	DIN 2184-1	2B	C
MTH- 10-24UNC-BC-V040	UNC 10-24	–	24	6,00	25	7,3	70	6.00X4.90	3	DIN 2184-1	2B	C
MTH- 12-24UNC-BC-V040	UNC 12-24	–	24	6,00	30	10	80	6.00X4.90	3	DIN 2184-1	2B	C
MTH- 1/4-20UNC-BC-V040	UNC 1/4-20	–	20	7,00	30	10	80	7.00X5.50	3	DIN 2184-1	2B	C
MTH- 5/16-18UNC-BC-V040	UNC 5/16-18	–	18	8,00	35	12	90	8.00X6.20	3	DIN 2184-1	2B	C
MTH- 3/8-16UNC-BC-V040	UNC 3/8-16	–	16	10,00	39	15	100	10.00X8.00	3	DIN 2184-1	2B	C
MTH- 7/16-14UNC-BC-V040	UNC 7/16-14	–	14	8,00	75,75	15	100	8.00X6.20	3	DIN 2184-1	2B	C
MTH- 1/2-13UNC-BC-V040	UNC 1/2-13	–	13	9,00	82,75	18	110	9.00X7.00	3	DIN 2184-1	2B	C
MTH- 5/8-11UNC-BC-V040	UNC 5/8-11	–	11	12,00	67,75	20	110	12.00X9.00	4	DIN 2184-1	2B	C

Please check availability in current price and stock-list.

MTH-V043



- For cutting data see page 276
- Coating TiN
- Substrate HSS-PM

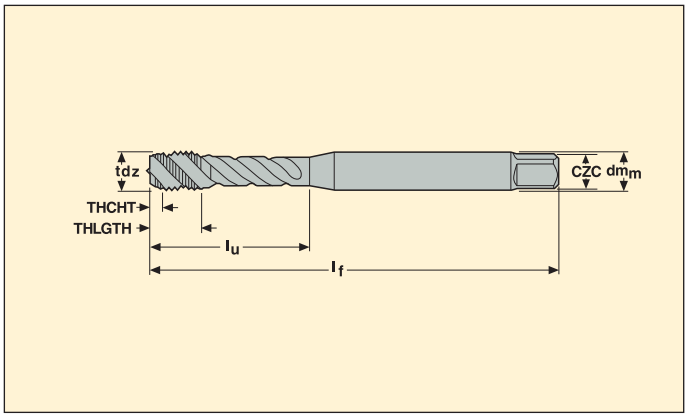

Part No.	Thread tdz	Pitch		Dimensions in mm					No. of flutes	BSG	tctr	THCHT
		mm	TPI	dm_m	l_u	THLGTH	l_f	CZC				
MTH- 8-36UNF-BC-V043	UNF 8-36	–	36	4,50	21	6,5	63	4.50X3.40	3	DIN 2184-1	2B	C
MTH- 10-32UNF-BC-V043	UNF 10-32	–	32	6,00	25	7,3	70	6.00X4.90	3	DIN 2184-1	2B	C
MTH- 1/4-28UNF-BC-V043	UNF 1/4-28	–	28	7,00	30	10	80	7.00X5.50	3	DIN 2184-1	2B	C
MTH- 5/16-24UNF-BC-V043	UNF 5/16-24	–	24	8,00	35	12	90	8.00X6.20	3	DIN 2184-1	2B	C
MTH- 3/8-24UNF-BC-V043	UNF 3/8-24	–	24	10,00	39	15	100	10.00X8.00	3	DIN 2184-1	2B	C
MTH- 7/16-20UNF-BC-V043	UNF 7/16-20	–	20	8,00	75,75	15	100	8.00X6.20	3	DIN 2184-1	2B	C
MTH- 1/2-20UNF-BC-V043	UNF 1/2-20	–	20	9,00	83	18	110	9.00X7.00	3	DIN 2184-1	2B	C
MTH- 5/8-18UNF-BC-V043	UNF 5/8-18	–	18	12,00	67,75	20	110	12.00X9.00	4	DIN 2184-1	2B	C

Please check availability in current price and stock-list.

MTH-V045



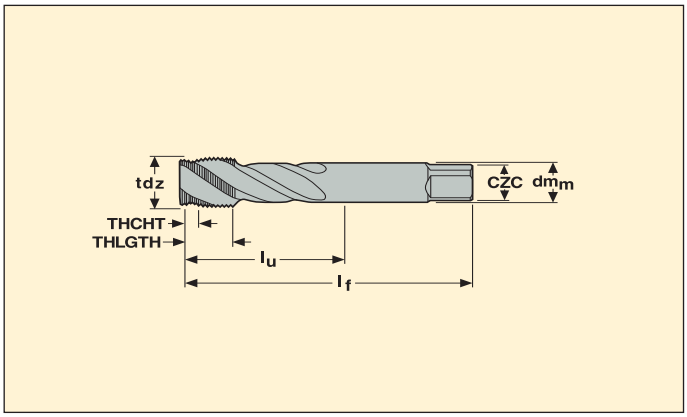

- For cutting data see page 276
- Coating TiN
- Substrate HSS-PM ≤ G3/8, HSS-E > G3/8

Part No.	Thread tdz	Pitch		Dimensions in mm					No. of flutes	BSG	tctr	THCHT
		mm	TPI	dm_m	l_u	THLGTH	l_f	CZC				
MTH- 1/8-28G-BC-V045	G 1/8-28	–	28	7,00	67	13	90	7.00X5.50	3	DIN 5156	NORMAL	C
MTH- 1/4-19G-BC-V045	G 1/4-19	–	19	11,00	71	15	100	11.00X9.00	3	DIN 5156	NORMAL	C
MTH- 3/8-19G-BC-V045	G 3/8-19	–	19	12,00	58	15	100	12.00X9.00	4	DIN 5156	NORMAL	C
MTH- 1/2-14G-BC-V045	G 1/2-14	–	14	16,00	80	18	125	16.00X12.00	4	DIN 5156	NORMAL	C
MTH- 5/8-14G-BC-V045	G 5/8-14	–	14	18,00	78	18	125	18.00X14.50	4	DIN 5156	NORMAL	C
MTH- 3/4-14G-BC-V045	G 3/4-14	–	14	20,00	77	20	140	20.00X16.00	4	DIN 5156	NORMAL	C
MTH- 7/8-14G-BC-V045	G 7/8-14	–	14	22,00	85	20	150	22.00X18.00	4	DIN 5156	NORMAL	C
MTH- 1-11G-BC-V045	G 1-11	–	11	25,00	93	22	160	25.00X20.00	4	DIN 5156	NORMAL	C
MTH- 1.1/8-11G-BC-V045	G 1.1/8-11	–	11	28,00	101	22	170	28.00X22.00	4	DIN 5156	NORMAL	C
MTH- 1.1/4-11G-BC-V045	G 1.1/4-11	–	11	32,00	72	22	170	32.00X24.00	4	DIN 5156	NORMAL	C
MTH- 1.1/2-11G-BC-V045	G 1.1/2-11	–	11	36,00	87	23	190	36.00X29.00	4	DIN 5156	NORMAL	C

Please check availability in current price and stock-list.

MTH-V048



- For cutting data see page 276
- Vaporised
- Substrate HSS-E

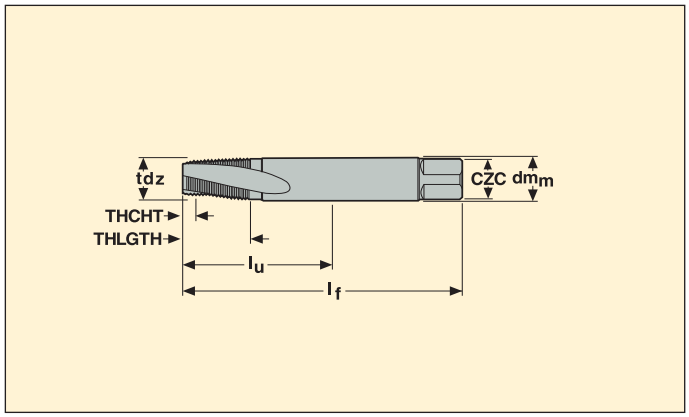

Part No.	Thread tdz	Pitch		Dimensions in mm					No. of flutes	BSG	tctr	THCHT
		mm	TPI	dm_m	l_u	THLGTH	l_f	CZC				
MTH- 1/16-27NPT-XC-V048	NPT 1/16-27	–	27	7,95	56	14	80	7.95X5.94	3	DIN/ANSI	NORMAL	C
MTH- 1/8-27NPT-XC-V048	NPT 1/8-27	–	27	11,10	64	14	90	11.10X8.33	4	DIN/ANSI	NORMAL	C
MTH- 1/4-18NPT-XC-V048	NPT 1/4-18	–	18	14,27	59	20	100	14.27X10.69	4	DIN/ANSI	NORMAL	C
MTH- 3/8-18NPT-XC-V048	NPT 3/8-18	–	18	17,78	67	20	110	17.78X13.49	5	DIN/ANSI	NORMAL	C
MTH- 1/2-14NPT-XC-V048	NPT 1/2-14	–	14	17,45	79	26	125	17.45X13.08	5	DIN/ANSI	NORMAL	C
MTH- 3/4-14NPT-XC-V048	NPT 3/4-14	–	14	23,01	78	26	140	23.01X17.25	5	DIN/ANSI	NORMAL	C
MTH- 1-11.5NPT-XC-V048	NPT 1-11.5	–	11,5	28,58	58	31	150	28.58X21.41	5	DIN/ANSI	NORMAL	C

Please check availability in current price and stock-list.

MTH-V050



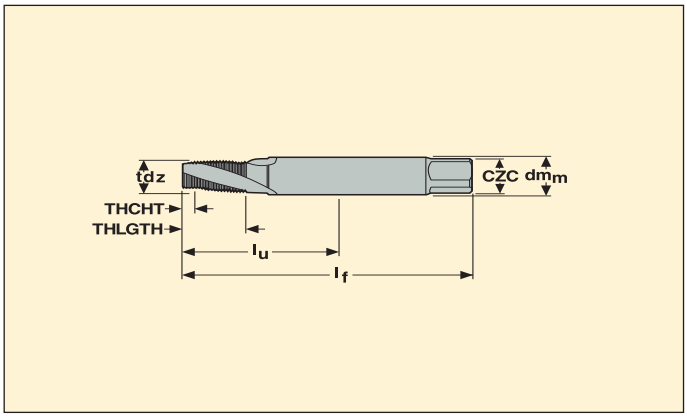

- For cutting data see page 276
- Vaporised
- Substrate HSS-E

Part No.	Thread tdz	Pitch		Dimensions in mm					No. of flutes	BSG	tctr	THCHT
		mm	TPI	dm_m	l_u	THLGTH	l_f	CZC				
MTH- 1/16-27NPTF-XC-V050	NPTF 1/16-27	–	27	7,95	56	14	80	7.95X5.94	3	DIN/ANSI	NORMAL	C
MTH- 1/8-27NPTF-XC-V050	NPTF 1/8-27	–	27	11,10	64	14	90	11.10X8.33	4	DIN/ANSI	NORMAL	C
MTH- 1/4-18NPTF-XC-V050	NPTF 1/4-18	–	18	14,27	59	20	100	14.27X10.69	4	DIN/ANSI	NORMAL	C
MTH- 3/8-18NPTF-XC-V050	NPTF 3/8-18	–	18	17,78	67	20	110	17.78X13.49	5	DIN/ANSI	NORMAL	C
MTH- 1/2-14NPTF-XC-V050	NPTF 1/2-14	–	14	17,45	79	26	125	17.45X13.08	5	DIN/ANSI	NORMAL	C
MTH- 3/4-14NPTF-XC-V050	NPTF 3/4-14	–	14	23,01	78	26	140	23.01X17.25	5	DIN/ANSI	NORMAL	C

Please check availability in current price and stock-list.

MF-V053



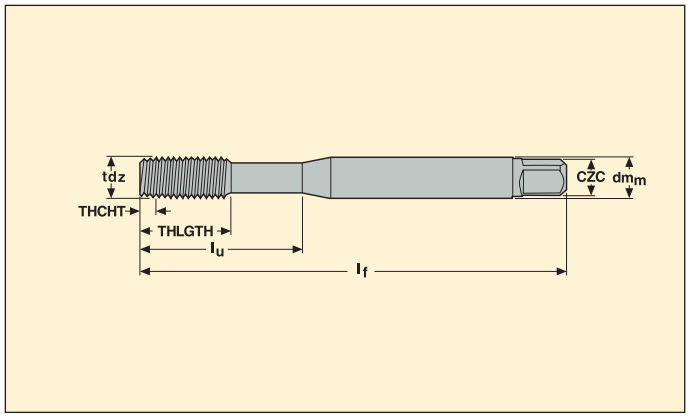

- Forming taps
- For cutting data see page 276
- Coating TiN
- Substrate HSS-E

Part No.	Thread tdz	Pitch		Dimensions in mm					No. of flutes	BSG	tctr	THCHT
		mm	TPI	dm_m	l_u	THLGTH	l_f	CZC				
MF- M3X0.50ISO6HX-XE-V053	M3	0,5	–	3,50	18	9	56	3.50X2.70	–	DIN 2174	6HX	E
MF- M4X0.70ISO6HX-XE-V053	M4	0,7	–	4,50	21	12	63	4.50X3.40	–	DIN 2174	6HX	E
MF- M5X0.80ISO6HX-XE-V053	M5	0,8	–	6,00	25	13	70	6.00X4.90	–	DIN 2174	6HX	E
MF- M6X1.00ISO6HX-XE-V053	M6	1	–	6,00	30	15	80	6.00X4.90	–	DIN 2174	6HX	E
MF- M8X1.25ISO6HX-XE-V053	M8	1,25	–	8,00	35	18	90	8.00X6.20	–	DIN 2174	6HX	E
MF- M10X1.50ISO6HX-XE-V053	M10	1,5	–	10,00	39	20	100	10.00X8.00	–	DIN 2174	6HX	E

Please check availability in current price and stock-list.

MF-V055



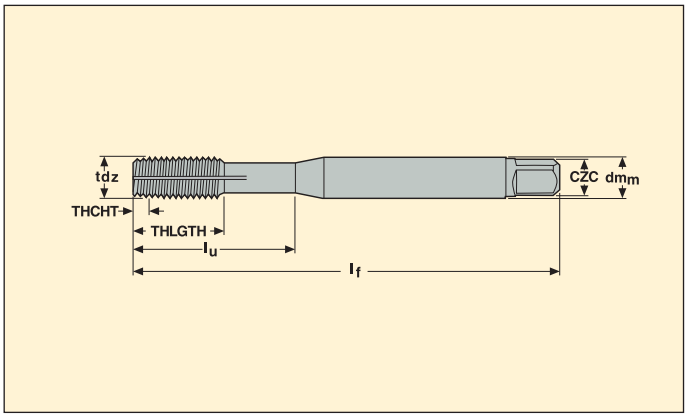

- Forming taps
- With channels for lubrication
- For cutting data see page 276
- Coating TiN
- Substrate HSS-E

Part No.	Thread tdz	Pitch		Dimensions in mm					No. of flutes	BSG	tctr	THCHT
		mm	TPI	dm_m	l_u	THLGTH	l_f	CZC				
MF- M3X0.50ISO6HX-XC-V055	M3	0,5	–	3,50	18	9	56	3.50X2.70	–	DIN 2174	6HX	C
MF- M4X0.70ISO6HX-XC-V055	M4	0,7	–	4,50	21	12	63	4.50X3.40	–	DIN 2174	6HX	C
MF- M5X0.80ISO6HX-XC-V055	M5	0,8	–	6,00	25	13	70	6.00X4.90	–	DIN 2174	6HX	C
MF- M6X1.00ISO6HX-XC-V055	M6	1	–	6,00	30	15	80	6.00X4.90	–	DIN 2174	6HX	C
MF- M7X1.00ISO6HX-XC-V055	M7	1	–	7,00	30	15	80	7.00X5.50	–	DIN 2174	6HX	C
MF- M8X1.25ISO6HX-XC-V055	M8	1,25	–	8,00	35	18	90	8.00X6.20	–	DIN 2174	6HX	C
MF- M10X1.50ISO6HX-XC-V055	M10	1,5	–	10,00	39	20	100	10.00X8.00	–	DIN 2174	6HX	C
MF- M12X1.75ISO6HX-XC-V055	M12	1,75	–	9,00	83	23	110	9.00X7.00	–	DIN 2174	6HX	C
MF- M14X2.00ISO6HX-XC-V055	M14	2	–	11,00	81	25	110	11.00X9.00	–	DIN 2174	6HX	C
MF- M16X2.00ISO6HX-XC-V055	M16	2	–	12,00	68	25	110	12.00X9.00	–	DIN 2174	6HX	C
MF- M20X2.50ISO6HX-XC-V055	M20	2,5	–	16,00	95	30	140	16.00X12.00	–	DIN 2174	6HX	C
MF- M24X3.00ISO6HX-XC-V055	M24	3	–	18,00	113	36	160	18.00X14.50	–	DIN 2174	6HX	C

Please check availability in current price and stock-list.

MF-V058



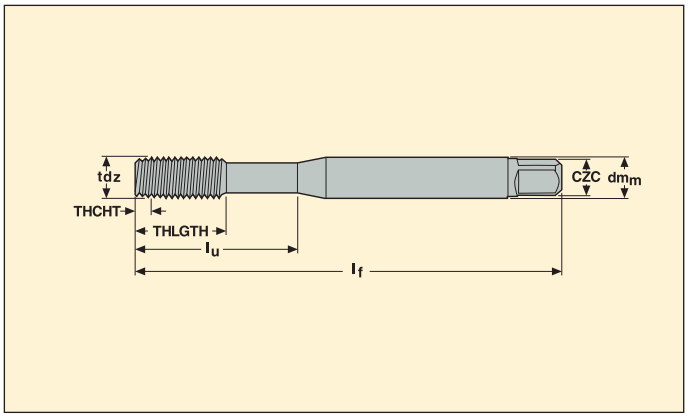

- Forming taps
- For cutting data see page 276
- Coating TiN
- Substrate HSS-E

Part No.	Thread tdz	Pitch		Dimensions in mm					No. of flutes	BSG	tctr	THCHT
		mm	TPI	dm_m	l_u	THLGTH	l_f	CZC				
MF- M3X0.50ISO6GX-XC-V058	M3	0,5	–	3,50	18	9	56	3.50X2.70	–	DIN 2174	6GX	C
MF- M3.5X0.60ISO6GX-XC-V058	M3.5	0,6	–	4,00	20	11	56	4.00X3.00	–	DIN 2174	6GX	C
MF- M4X0.70ISO6GX-XC-V058	M4	0,7	–	4,50	21	12	63	4.50X3.40	–	DIN 2174	6GX	C
MF- M5X0.80ISO6GX-XC-V058	M5	0,8	–	6,00	25	13	70	6.00X4.90	–	DIN 2174	6GX	C
MF- M6X1.00ISO6GX-XC-V058	M6	1	–	6,00	30	15	80	6.00X4.90	–	DIN 2174	6GX	C
MF- M8X1.25ISO6GX-XC-V058	M8	1,25	–	8,00	35	18	90	8.00X6.20	–	DIN 2174	6GX	C
MF- M10X1.50ISO6GX-XC-V058	M10	1,5	–	10,00	39	20	100	10.00X8.00	–	DIN 2174	6GX	C
MF- M12X1.75ISO6GX-XC-V058	M12	1,75	–	9,00	83	23	110	9.00X7.00	–	DIN 2174	6GX	C

Please check availability in current price and stock-list.

MF-V060-A



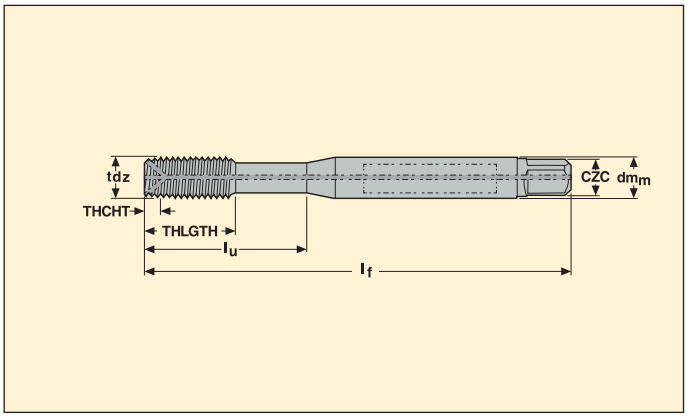

- Forming taps
- For cutting data see page 276
- Coating TiN
- A = Internal through coolant
- Substrate HSS-E

Part No.	Thread tdz	Pitch		Dimensions in mm					No. of flutes	BSG	tctr	THCHT
		mm	TPI	dm_m	l_u	THLGTH	l_f	CZC				
MF- M5X0.80ISO6HX-XC-V060-A	M5	0,8	–	6,00	21	13	70	6.00X4.90	–	DIN 2174	6HX	C
MF- M6X1.00ISO6HX-XC-V060-A	M6	1	–	6,00	26	15	80	6.00X4.90	–	DIN 2174	6HX	C
MF- M8X1.25ISO6HX-XC-V060-A	M8	1,25	–	8,00	30	18	90	8.00X6.20	–	DIN 2174	6HX	C
MF- M10X1.50ISO6HX-XC-V060-A	M10	1,5	–	10,00	33	20	100	10.00X8.00	–	DIN 2174	6HX	C
MF- M12X1.75ISO6HX-XC-V060-A	M12	1,75	–	9,00	83	23	110	9.00X7.00	–	DIN 2174	6HX	C

Please check availability in current price and stock-list.

MF-V063



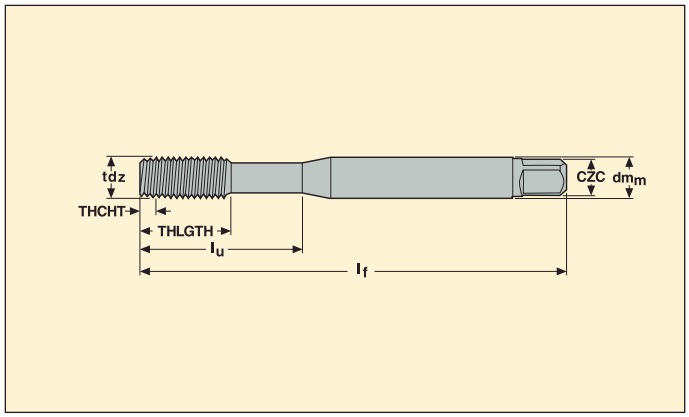

- Forming taps
- For cutting data see page 276
- Coating TiN
- Substrate HSS-E

Part No.	Thread tdz	Pitch		Dimensions in mm					No. of flutes	BSG	tctr	THCHT
		mm	TPI	dm_m	l_u	THLGTH	l_f	CZC				
MF- M5X0.50ISO6HX-XC-V063	MF5x0.5	0,5	–	6,00	25	13	70	6.00X4.90	–	DIN 2174	6HX	C
MF- M6X0.75ISO6HX-XC-V063	MF6x0.75	0,75	–	6,00	30	15	80	6.00X4.90	–	DIN 2174	6HX	C
MF- M7X0.75ISO6HX-XC-V063	MF7x0.75	0,75	–	7,00	30	15	80	7.00X5.50	–	DIN 2174	6HX	C
MF- M8X0.75ISO6HX-XC-V063	MF8x0.75	0,75	–	6,00	57	18	80	6.00X4.90	–	DIN 2174	6HX	C
MF- M8X1.00ISO6HX-XC-V063	MF8x1.0	1	–	6,00	67	18	90	6.00X4.90	–	DIN 2174	6HX	C
MF- M10X1.00ISO6HX-XC-V063	MF10x1.0	1	–	7,00	75	20	100	7.00X5.50	–	DIN 2174	6HX	C
MF- M10X1.25ISO6HX-XC-V063	MF10x1.25	1,25	–	7,00	75	20	100	7.00X5.50	–	DIN 2174	6HX	C
MF- M12X1.00ISO6HX-XC-V063	MF12x1.0	1	–	9,00	73	23	100	9.00X7.00	–	DIN 2174	6HX	C
MF- M12X1.25ISO6HX-XC-V063	MF12x1.25	1,25	–	9,00	73	23	100	9.00X7.00	–	DIN 2174	6HX	C
MF- M12X1.50ISO6HX-XC-V063	MF12x1.5	1,5	–	9,00	73	23	100	9.00X7.00	–	DIN 2174	6HX	C
MF- M14X1.00ISO6HX-XC-V063	MF14x1.0	1	–	11,00	71	21	100	11.00X9.00	–	DIN 2174	6HX	C
MF- M14X1.25ISO6HX-XC-V063	MF14x1.25	1,25	–	11,00	71	21	100	11.00X9.00	–	DIN 2174	6HX	C
MF- M14X1.50ISO6HX-XC-V063	MF14x1.5	1,5	–	11,00	71	21	100	11.00X9.00	–	DIN 2174	6HX	C
MF- M16X1.50ISO6HX-XC-V063	MF16x1.5	1,5	–	12,00	58	21	100	12.00X9.00	–	DIN 2174	6HX	C

Please check availability in current price and stock-list.



Multi-cut or indexable insert – Choosing the best solution

Quality, performance and tool cost, all these objectives can be met. The choice of a reaming tool depends on hole tolerance, production quantity and cycle time. Seco Holemaking systems can meet these demands.
With Precimaster, Precifix, Bifix, new Xfix and Nanofix reamers Seco can solve all problems related to reaming operations.

The chart below helps you to choose the ideal reaming tool

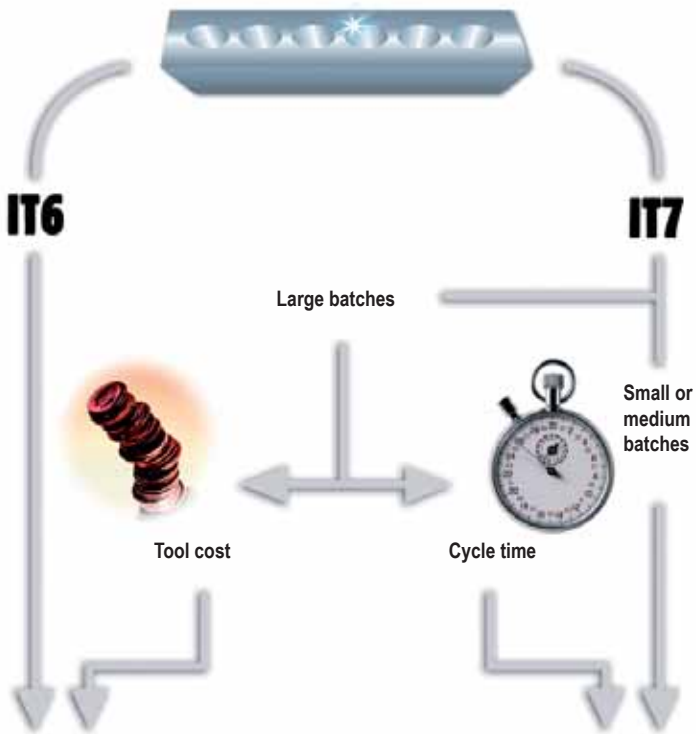

BIFIX®



PRECIFIX™



PRECIMASTER™PLUS



XFIX™



NANOFIX™



Range overview

	∅ Range	Reaming depth	Hole tolerance	Intermediate diameters	Surface finish
Precimaster™ Plus  **Pages 318-355**	9,520–60,500	~ 2–8 x D	IT 6–7–8	Yes, available through Custom Design	R_a 0,4–0,8 µm
Nanofix™  **Pages 356-375**	2,970-12,050	~ 5-12 x D	IT 7	Yes, available through Custom Design	R_a 0,8–1,2 µm
Bifix®  **Pages 376-396**	5,900–60,500	~ 2–7 x D	IT 6–7	Yes, available through Custom Design	R_a 0,2–0,8 µm
Precifix™  **Pages 397-418**	11,750–60,500	~ 2–10 x D	IT 6–7	Yes, available through Custom Design	R_a 0,4–0,8 µm
Xfix™  **Pages 419-455**	39,500-154,500	~ 2,5-6,5 x D	IT 6	Yes, available through Custom Design	R_a 0,4–0,8 µm



Range overview

Precimaster™	∅ Range	Reaming depth	Hole tolerance	Intermediate diameters	Surface finish
PM50/PM55/PM60 	9,520–38,499	~ 2–3 x D	IT 6–7–8	Yes, available through Custom Design	R_a 0,4–0,8 µm
PM50/PM55/PM60 	9,520–38,499	~ 4–5 x D	IT 6–7–8	Yes, available through Custom Design	R_a 0,4–0,8 µm
PM50/PM55/PM60 	9,520–38,499	~ 8–10 x D	IT 6–7–8	Yes, available through Custom Design	R_a 0,4–0,8 µm
PM70/PM75/PM80 	38,500–60,500	~ 2–3 x D	IT 6–7–8	Yes, available through Custom Design	R_a 0,4–0,8 µm
PM70/PM75/PM80 	38,500–60,500	~ 4 –5 x D	IT 6–7–8	Yes, available through Custom Design	R_a 0,4–0,8 µm

Code key tool shank

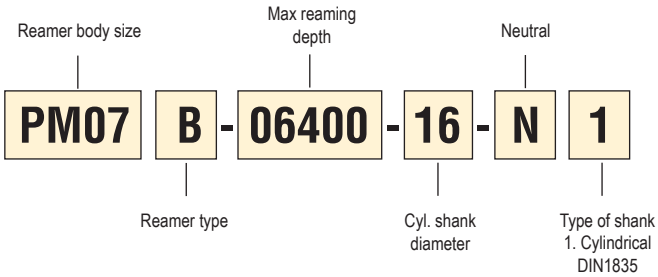



PM07 = Standard solution is designed for through hole reaming.
Coolant outlet holes located behind the cutting head, pushing chips forward.

PM07B = For blind holes. Coolant outlet hole is located on front-end of tool, pushing chips backward.

Code key head

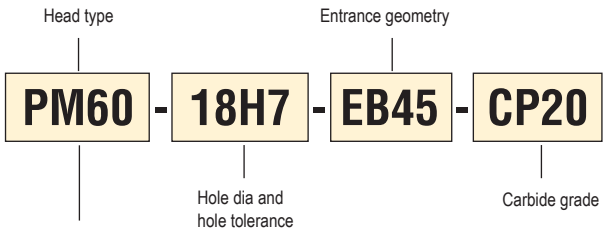



PM50 = Standard solution is designed for through hole reaming.
Coolant outlet holes located behind the cutting head, pushing chips forward.

PM55 = For blind holes. Coolant outlet hole is located on front-end of tool, pushing chips backward.

PM60 = For through holes. The left hand flute design improves the action of pushing the chips forward.

See Precimaster – Head choice page 322

Code key head intermediate diameter

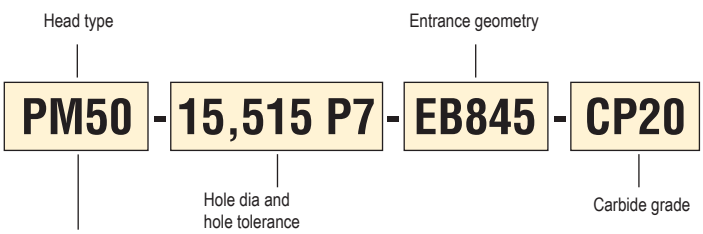

PM50 = Standard solution is designed for through hole reaming.
Coolant outlet holes located behind the cutting head, pushing chips forward.

PM55 = For blind holes. Coolant outlet hole is located on front-end of tool, pushing chips backward.

PM60 = For through holes. The left hand flute design improves the action of pushing the chips forward.

See Precimaster – Head choice page 322

Set up – Run-out

Rotating tool

Max. run-out recommended ∅ 9,520-60,499. Max 10 µm.
Hydraulic chuck, Shrinkfit or D-type precision collet is recommended.



Static tool

Use a Seco floating holder, see page 469-473



Floating holders allow reamer self-centring in pre-bore.

Coolant requirements

To reach maximum tool life and hole quality, the following coolant requirements should be observed.

Coolant through the tool is recommended.
External coolant supply can be used if reaming depth < 2 x D.

Quality soluble oil with 40% minimum mineral oil.
Neat oil recommended for stainless steel.

Concentration minimum 6–8%.
Filtration 30–50 µm.
Volume min 0,5 l/min/mm in tool diameter. (Ex: Reamer ∅ 10, min volume is 5 l/min).

Diameter measurement

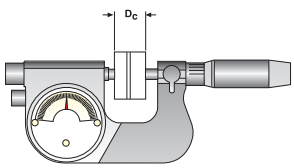

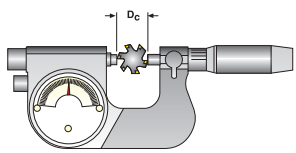

Gauge clock micrometer prior to measurment.

Important!

Precimaster reamers have differential pitch between the teeth.
When measuring the diameter, make sure that you have 2 teeth 180° opposite (same orientation as driving pins).

Use clock micrometer and measuring blocks for gauging.

Head choice – Choose cutting head style according to application and diameter

Workpiece	Diameter to ream ∅ 9,520-38,499	Diameter to ream ∅ 38,500-60,499
Short through hole < 3 x D 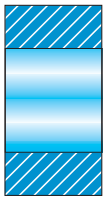	PM50 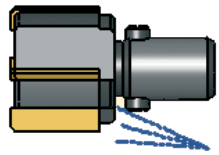	PM70 
Blind hole 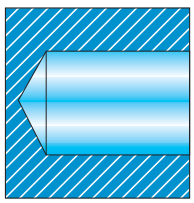	PM55 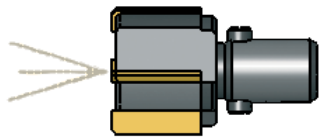	PM75 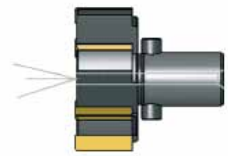
Blind and crossing hole 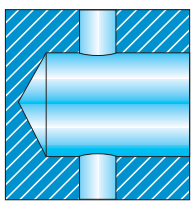	PM55 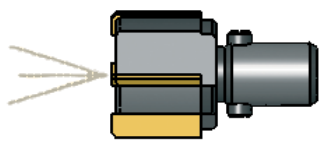	PM75 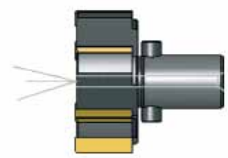
Long through hole > 3 x D 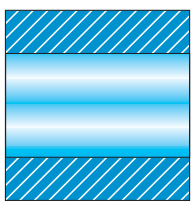	PM60 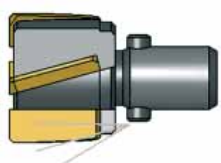	PM80 
Crossing hole 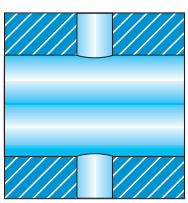	PM60 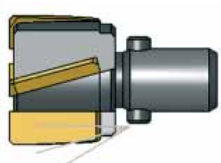	PM80 

Geometry choice – Applications

Lead geometry - EB45

Chip control +++
Surface Finish + (R_a 0,8 - 1,2 µm)
Versatile

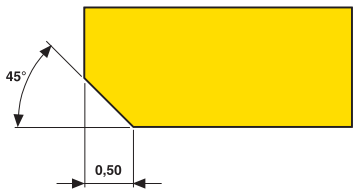

Lead geometry - EB845

Chip control ++
Surface finish+++ (R_a 0,2 - 0,8 µm)

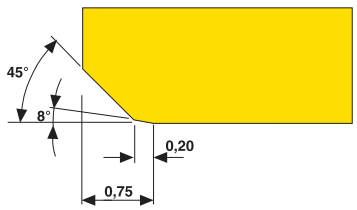

Lead geometry - EB25

Feed performance +++
Surface finish ++ (R_a 0,4 - 0,8 µm)
Chip control +

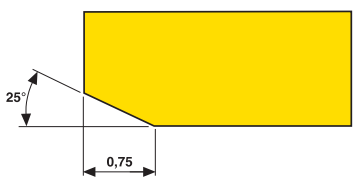

Grades

	**CP20**	**Coated** A versatile coated grade suitable for most materials, except aluminium. TiN
	**H15**	**Uncoated** A tough micrograin grade for all materials. Suitable for fine-reaming operations due to edge sharpness.
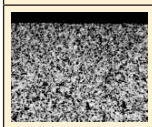	**CF**	**Cermet** A wear resistant grade for performance optimization in steel.
	**RX1500**	**Coated Cermet** A wear resistant coated grade for performance optimization in steel and cast iron.
	**RX2000**	**Coated** High performance coated grade suitable for all materials.

Heads for through holes ∅ 9,520 to 38,499



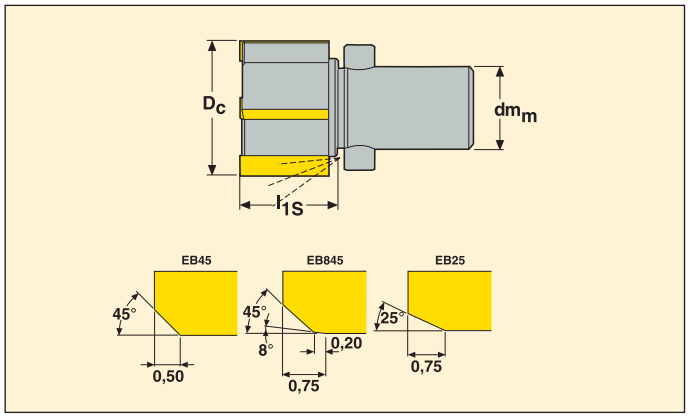

Dc	Drill size*	Part No.		l1s	dmm	Body size	Geometries			Grades				
							EB45	EB845	EB25	H15	CP20	RX2000	CF	RX1500
10	9,8/9,9	PM50-10H7-EB45	4	9	6	PM06-XX	■	■	□	□	□	■	□	□
11	10,8/10,9	PM50-11H7-EB45	4	9	6	PM06-XX	■	■	□	□	□	■	□	□
12	11,8/11,908	PM50-12H7-EB45	4	12	7	PM07-XX	■	■	□	□	□	■	□	□
13	12,8/12,9	PM50-13H7-EB45	4	12	7	PM07-XX	■	■	□	□	□	■	□	□
14	13,8/13,891	PM50-14H7-EB45	4	12	7	PM07-XX	■	■	□	□	□	■	□	□
15	14,8/14,9	PM50-15H7-EB45	4	12	7	PM07-XX	■	■	□	□	□	■	□	□
16	15,8/15,9	PM50-16H7-EB45	6	13	8	PM08-XX	■	■	□	□	□	■	□	□
17	16,8/16,9	PM50-17H7-EB45	6	13	8	PM08-XX	■	■	□	□	□	■	□	□
18	17,8/17,9	PM50-18H7-EB45	6	13	8	PM08-XX	■	■	□	□	□	■	□	□
19	18,8/18,9	PM50-19H7-EB45	6	13	8	PM08-XX	■	■	□	□	□	■	□	□
20	19,8/19,9	PM50-20H7-EB45	6	13	8	PM08-XX	■	■	□	□	□	■	□	□
21	20,8/20,9	PM50-21H7-EB45	6	13	8	PM08-XX	■	■	□	□	□	■	□	□
22	21,8/21,9	PM50-22H7-EB45	6	16	11	PM11-XX	■	■	□	□	□	■	□	□
23	22,8/22,9	PM50-23H7-EB45	6	16	11	PM11-XX	■	■	□	□	□	■	□	□
24	23,813/23,9	PM50-24H7-EB45	6	16	11	PM11-XX	■	■	□	□	□	■	□	□
25	24,8/24,9	PM50-25H7-EB45	6	16	11	PM11-XX	■	■	□	□	□	■	□	□
26	25,8/25,9	PM50-26H7-EB45	6	16	11	PM11-XX	■	■	□	□	□	■	□	□
27	26,8/26,9	PM50-27H7-EB45	6	20	15	PM15-XX	■	■	□	□	□	■	□	□
28	27,8/27,9	PM50-28H7-EB45	6	20	15	PM15-XX	■	■	□	□	□	■	□	□
29	28,8/28,9	PM50-29H7-EB45	6	20	15	PM15-XX	■	■	□	□	□	■	□	□
30	29,8/29,9	PM50-30H7-EB45	6	20	15	PM15-XX	■	■	□	□	□	■	□	□
31	30,8/30,9	PM50-31H7-EB45	6	20	15	PM15-XX	■	■	□	□	□	■	□	□
32	31,8/31,9	PM50-32H7-EB45	6	20	15	PM15-XX	■	■	□	□	□	■	□	□

* For further information on which drill to use and how to use it see page 9.

■ **Stock standard, □ = Non stock standard. Subject to change refer to current price- and stock-list.**

Heads for through holes ∅ 9,520 to 38,499



- Heads for through holes (can also be used for blind bore: Reaming depth Max 1 x D,V_c reduced 50-80 %).

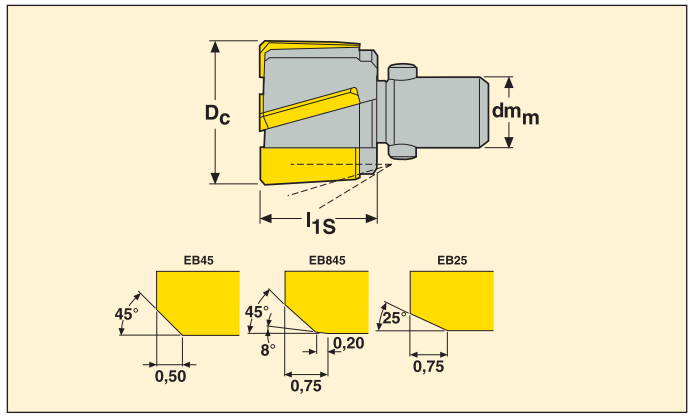

D_c	Drill size*	Part No.		l_{1s}	dm_m	Body size	Geometries			Grades				
							EB45	EB845	EB25	H15	CP20	RX2000	CF	RX1500
10	9,8/9,9	**PM60-10H7-EB45**	4	9	6	PM06-XX	■	□	□	□	□	■	□	□
11	10,8/10,9	**PM60-11H7-EB45**	4	9	6	PM06-XX	■	□	□	□	□	■	□	□
12	11,8/11,908	**PM60-12H7-EB45**	4	12	7	PM07-XX	■	□	□	□	□	■	□	□
13	12,8/12,9	**PM60-13H7-EB45**	4	12	7	PM07-XX	■	□	□	□	□	■	□	□
14	13,8/13,891	**PM60-14H7-EB45**	4	12	7	PM07-XX	■	□	□	□	□	■	□	□
15	14,8/14,9	**PM60-15H7-EB45**	4	12	7	PM07-XX	■	□	□	□	□	■	□	□
16	15,8/15,9	**PM60-16H7-EB45**	6	13	8	PM08-XX	■	□	□	□	□	■	□	□
17	16,8/16,9	**PM60-17H7-EB45**	6	13	8	PM08-XX	■	□	□	□	□	■	□	□
18	17,8/17,9	**PM60-18H7-EB45**	6	13	8	PM08-XX	■	□	□	□	□	■	□	□
19	18,8/18,9	**PM60-19H7-EB45**	6	13	8	PM08-XX	■	□	□	□	□	■	□	□
20	19,8/19,9	**PM60-20H7-EB45**	6	13	8	PM08-XX	■	□	□	□	□	■	□	□
21	20,8/20,9	**PM60-21H7-EB45**	6	13	8	PM08-XX	■	□	□	□	□	■	□	□
22	21,8/21,9	**PM60-22H7-EB45**	6	16	11	PM11-XX	■	□	□	□	□	■	□	□
23	22,8/22,9	**PM60-23H7-EB45**	6	16	11	PM11-XX	■	□	□	□	□	■	□	□
24	23,813/23,9	**PM60-24H7-EB45**	6	16	11	PM11-XX	■	□	□	□	□	■	□	□
25	24,8/24,9	**PM60-25H7-EB45**	6	16	11	PM11-XX	■	□	□	□	□	■	□	□
26	25,8/25,9	**PM60-26H7-EB45**	6	16	11	PM11-XX	■	□	□	□	□	■	□	□
27	26,8/26,9	**PM60-27H7-EB45**	6	20	15	PM15-XX	■	□	□	□	□	■	□	□
28	27,8/27,9	**PM60-28H7-EB45**	6	20	15	PM15-XX	■	□	□	□	□	■	□	□
29	28,8/28,9	**PM60-29H7-EB45**	6	20	15	PM15-XX	■	□	□	□	□	■	□	□
30	29,8/29,9	**PM60-30H7-EB45**	6	20	15	PM15-XX	■	□	□	□	□	■	□	□
31	30,8/30,9	**PM60-31H7-EB45**	6	20	15	PM15-XX	■	□	□	□	□	■	□	□
32	31,8/31,9	**PM60-32H7-EB45**	6	20	15	PM15-XX	■	□	□	□	□	■	□	□

* For further information on which drill to use and how to use it see page 9.

■ **Stock standard, □ = Non stock standard. Subject to change refer to current price- and stock-list.**

Shanks for through holes ∅ 9,520 to 38,499



- Cutting data see pages 332-333
- For choice of lead geometry EB45, EB845 or EB25 see page 323,

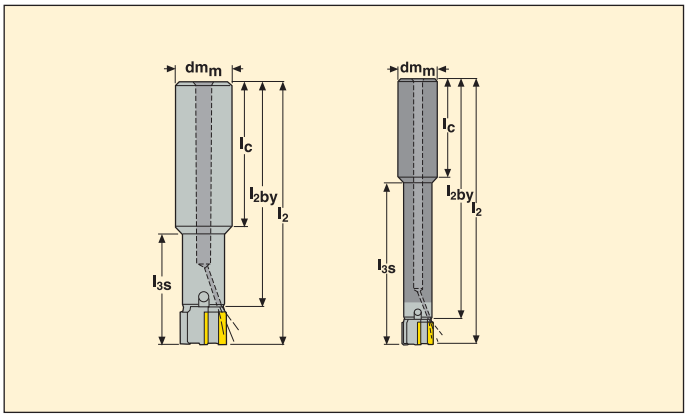

D_c	Tool holder material	Part No.	Dimensions in mm				
			l_2	l_{2by}	l_{3s}	l_c	dm_m
9,52-11,499	Steel	**PM06-02800-12N1**	75	66	28	45	12
	Steel	**PM06-05700-12N1**	104	95	57	45	12
	Steel	**PM06-12000-12N1**	167	158	120	45	12
	Carbide	**PM06HM-05700-12N1**	104	95	57	45	12
	Carbide	**PM06HM-12000-12N1**	167	158	120	45	12
11,5-15,499	Steel	**PM07-03300-16N1**	84	72	33	48	16
	Steel	**PM07-06400-16N1**	115	103	64	48	16
	Steel	**PM07-12000-16N1**	171	159	120	48	16
	Carbide	**PM07HM-06400-16N1**	115	103	64	48	16
	Carbide	**PM07HM-12000-16N1**	171	159	120	48	16
15,5-21,499	Steel	**PM08-03800-20N1**	91	78	38	50	20
	Steel	**PM08-08200-20N1**	135	122	82	50	20
	Steel	**PM08-14500-20N1**	198	185	145	50	20
	Carbide	**PM08HM-08200-20N1**	135	122	82	50	20
	Carbide	**PM08HM-14500-20N1**	198	185	145	50	20
21,5-26,499	Steel	**PM11-04800-25N1**	107	91	48	56	25
	Steel	**PM11-10600-25N1**	165	149	106	56	25
	Steel	**PM11-17000-25N1**	229	213	170	56	25
	Carbide	**PM11HM-10600-25N1**	165	149	106	56	25
	Carbide	**PM11HM-17000-25N1**	229	213	170	56	25
26,5-38,499	Steel	**PM15-06300-25N1**	121	101	63	56	25
	Steel	**PM15-12700-25N1**	185	165	127	56	25
	Steel	**PM15-17000-25N1**	229	209	170	56	25
	Carbide	**PM15HM-12700-25N1**	185	165	127	56	25
	Carbide	**PM15HM-17000-25N1**	229	209	170	56	25

Spare Parts

For shank	Clamp kit	Clamp key
	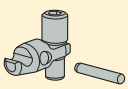	
PM06	PM06-CLKI	1.5SMS795
PM07	PM07-CLKI	1.5SMS795
PM08	PM08-CLKI	2SMS795
PM11	PM11-CLKI	2.5SMS795
PM15	PM15-CLKI	3SMS795

Accessories*

Torque key	Replacement blade
	
H00-1505	H00-1.5
H00-2009	H00-2.0
H00-2512	H00-2.5
H00-3020	H00-3.0

* Accessories not included in delivery.

Heads for blind holes ∅ 9,520 to 38,499



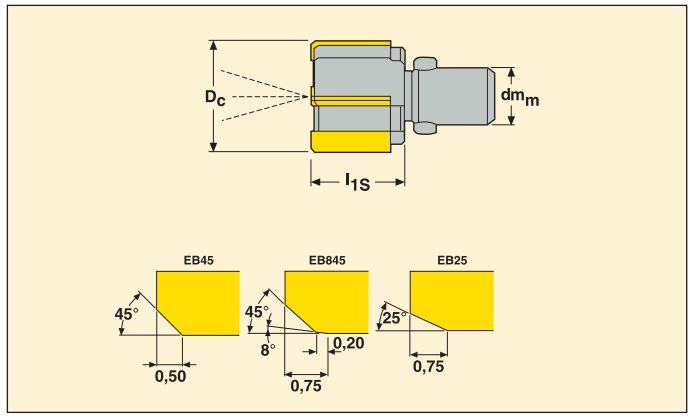

D_c	Drill size*	Part No.		l_{1s}	dm_m	Body size	Geometries			Grades				
							EB45	EB845	EB25	H15	CP20	RX2000	CF	RX1500
10	9,8/9,9	**PM55-10H7-EB45**	4	9	6	PM06B-XX	■	■	□	□	□	■	□	□
11	10,8/10,9	**PM55-11H7-EB45**	4	9	6	PM06B-XX	■	■	□	□	□	■	□	□
12	11,8/11,908	**PM55-12H7-EB45**	4	12	7	PM07B-XX	■	■	□	□	□	■	□	□
13	12,8/12,9	**PM55-13H7-EB45**	4	12	7	PM07B-XX	■	■	□	□	□	■	□	□
14	13,8/13,891	**PM55-14H7-EB45**	4	12	7	PM07B-XX	■	■	□	□	□	■	□	□
15	14,8/14,9	**PM55-15H7-EB45**	4	12	7	PM07B-XX	■	■	□	□	□	■	□	□
16	15,8/15,9	**PM55-16H7-EB45**	6	13	8	PM08B-XX	■	■	□	□	□	■	□	□
17	16,8/16,9	**PM55-17H7-EB45**	6	13	8	PM08B-XX	■	■	□	□	□	■	□	□
18	17,8/17,9	**PM55-18H7-EB45**	6	13	8	PM08B-XX	■	■	□	□	□	■	□	□
19	18,8/18,9	**PM55-19H7-EB45**	6	13	8	PM08B-XX	■	■	□	□	□	■	□	□
20	19,8/19,9	**PM55-20H7-EB45**	6	13	8	PM08B-XX	■	■	□	□	□	■	□	□
21	20,8/20,9	**PM55-21H7-EB45**	6	13	8	PM08B-XX	■	■	□	□	□	■	□	□
22	21,8/21,9	**PM55-22H7-EB45**	6	16	11	PM11B-XX	■	■	□	□	□	■	□	□
23	22,8/22,9	**PM55-23H7-EB45**	6	16	11	PM11B-XX	■	■	□	□	□	■	□	□
24	23,813/23,9	**PM55-24H7-EB45**	6	16	11	PM11B-XX	■	■	□	□	□	■	□	□
25	24,8/24,9	**PM55-25H7-EB45**	6	16	11	PM11B-XX	■	■	□	□	□	■	□	□
26	25,8/25,9	**PM55-26H7-EB45**	6	16	11	PM11B-XX	■	■	□	□	□	■	□	□
27	26,8/26,9	**PM55-27H7-EB45**	6	20	15	PM15B-XX	■	■	□	□	□	■	□	□
28	27,8/27,9	**PM55-28H7-EB45**	6	20	15	PM15B-XX	■	■	□	□	□	■	□	□
29	28,8/28,9	**PM55-29H7-EB45**	6	20	15	PM15B-XX	■	■	□	□	□	■	□	□
30	29,8/29,9	**PM55-30H7-EB45**	6	20	15	PM15B-XX	■	■	□	□	□	■	□	□
31	30,8/30,9	**PM55-31H7-EB45**	6	20	15	PM15B-XX	■	■	□	□	□	■	□	□
32	31,8/31,9	**PM55-32H7-EB45**	6	20	15	PM15B-XX	■	■	□	□	□	■	□	□

* For further information on which drill to use and how to use it see page 9.

■ **Stock standard, □ = Non stock standard. Subject to change refer to current price- and stock-list.**

Shanks for blind holes ∅ 9,520 to 38,499



- Cutting data see pages 332-333
- For choice of lead geometry EB45, EB845 or EB25 see page 323

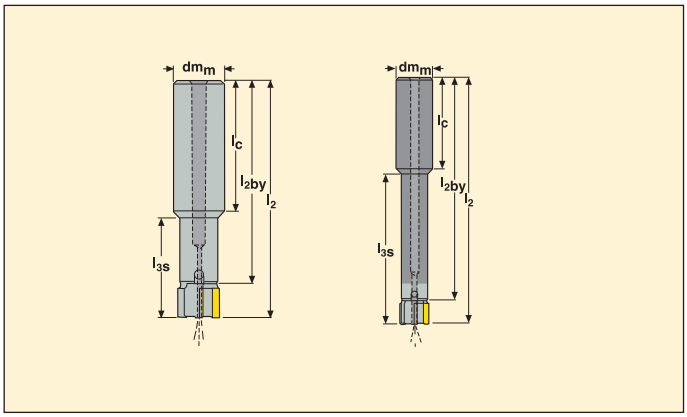

D_c	Tool holder material	Part No.	Dimensions in mm				
			l_2	l_{2by}	l_{3s}	l_c	dm_m
9,52-11,499	Steel	**PM06B-05700-12N1**	104	95	57	45	12
	Steel	**PM06B-12000-12N1**	167	158	120	45	12
	Carbide	**PM06BHM-05700-12N1**	104	95	57	45	12
	Carbide	**PM06BHM-12000-12N1**	167	158	120	45	12
11,5-15,499	Steel	**PM07B-03300-16N1**	84	72	33	48	16
	Steel	**PM07B-06400-16N1**	115	103	64	48	16
	Steel	**PM07B-12000-16N1**	171	159	120	48	16
	Carbide	**PM07BHM-06400-16N1**	115	103	64	48	16
	Carbide	**PM07BHM-12000-16N1**	171	159	120	48	16
15,5-21,499	Steel	**PM08B-03800-20N1**	91	78	38	50	20
	Steel	**PM08B-08200-20N1**	135	122	82	50	20
	Steel	**PM08B-14500-20N1**	198	185	145	50	20
	Carbide	**PM08BHM-08200-20N1**	135	122	82	50	20
	Carbide	**PM08BHM-14500-20N1**	198	185	145	50	20
21,5-26,499	Steel	**PM11B-04800-25N1**	107	91	48	56	25
	Steel	**PM11B-10600-25N1**	165	149	106	56	25
	Steel	**PM11B-17000-25N1**	229	213	170	56	25
	Carbide	**PM11BHM-10600-25N1**	165	149	106	56	25
	Carbide	**PM11BHM-17000-25N1**	229	213	170	56	25
26,5-38,499	Steel	**PM15-06300-25N1**	121	101	63	56	25
	Steel	**PM15-12700-25N1**	185	165	127	56	25
	Steel	**PM15-17000-25N1**	229	209	170	56	25
	Carbide	**PM15BHM-12700-25N1**	185	165	127	56	25
	Carbide	**PM15BHM-17000-25N1**	229	209	170	56	25

Spare Parts

For shank	Clamp kit	Clamp key
	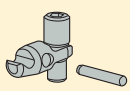	
PM06B	PM06-CLKI	1.5SMS795
PM07B	PM07-CLKI	1.5SMS795
PM08B	PM08-CLKI	2SMS795
PM11B	PM11-CLKI	2.5SMS795
PM15	PM15-CLKI	3SMS795
PM15B	PM15-CLKI	3SMS795

Accessories*

Torque key	Replacement blade
	
H00-1505	H00-1.5
H00-2009	H00-2.0
H00-2512	H00-2.5
H00-3020	H00-3.0

* Accessories not included in delivery.

Shanks for blind and through holes ∅ 38,500 to 60,500



- Cutting data see pages 332-333
- For choice of lead geometry EB45, EB845 or EB25 see page 323,

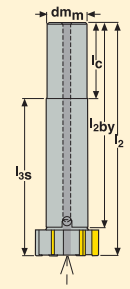

D_c	Tool holder material	Part No.	Dimensions in mm				
			l_2	l_{2by}	l_{3s}	l_c	dm_m
38,5-60,5	Steel	**PM19B-08800-32N1**	149	127	88	61	32
	Steel	**PM19B-14700-32N1**	208	186	147	61	32

Spare Parts

For shank	Clamp kit	Clamp key
PM19B	PM19-CLKI	4SMS795

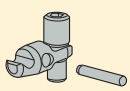



* Accessories not included in delivery.

Heads for intermediate diameters – through and blind holes ∅ 9,52 to 60,499



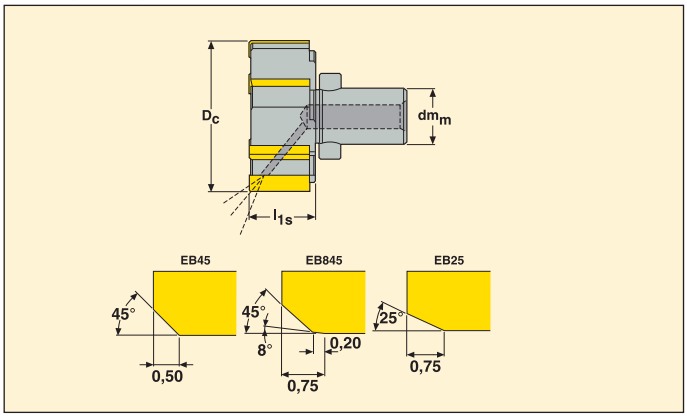

D_c	Part No.		l_{1s}	dm_m	Body size	Geometries			Grades				
						EB45	EB845	EB25	H15	CP20	RX2000	CF	RX1500
9,520-11,499	**PM50-XX-XXX-XXXX**	4	9	6	PM06-XX	□	□	□	□	□	□	□	□
11,500-15,499	**PM50-XX-XXX-XXXX**	4	9	6	PM07-XX	□	□	□	□	□	□	□	□
15,500-21,499	**PM50-XX-XXX-XXXX**	6	13	8	PM08-XX	□	□	□	□	□	□	□	□
21,500-26,499	**PM50-XX-XXX-XXXX**	6	16	11	PM11-XX	□	□	□	□	□	□	□	□
26,499-38,499	**PM50-XX-XXX-XXXX**	6	20	15	PM15-XX	□	□	□	□	□	□	□	□
9,520-11,499	**PM55-XX-XXX-XXXX**	4	9	6	PM06B-XX	□	□	□	□	□	□	□	□
11,500-15,499	**PM55-XX-XXX-XXXX**	6	12	7	PM07B-XX	□	□	□	□	□	□	□	□
15,500-21,499	**PM55-XX-XXX-XXXX**	6	13	8	PM08B-XX	□	□	□	□	□	□	□	□
21,500-26,499	**PM55-XX-XXX-XXXX**	6	16	11	PM11B-XX	□	□	□	□	□	□	□	□
26,499-38,499	**PM55-XX-XXX-XXXX**	6	20	15	PM15B-XX	□	□	□	□	□	□	□	□
9,520-11,499	**PM60-XX-XXX-XXXX**	4	9	6	PM06-XX	□	□	□	□	□	□	□	□
11,500-15,499	**PM60-XX-XXX-XXXX**	4	12	7	PM07-XX	□	□	□	□	□	□	□	□
15,500-21,499	**PM60-XX-XXX-XXXX**	6	13	8	PM08-XX	□	□	□	□	□	□	□	□
21,500-26,499	**PM60-XX-XXX-XXXX**	6	16	11	PM11-XX	□	□	□	□	□	□	□	□
26,499-38,499	**PM60-XX-XXX-XXXX**	6	20	15	PM15-XX	□	□	□	□	□	□	□	□
38,500-60,499	**PM70-XX-XXX-XXXX**	6	22	19	PM19B-XX	□	□	□	□	□	□	□	□
	PM75-XX-XXX-XXXX	6	22	19	PM19B-XX	□	□	□	□	□	□	□	□
	PM80-XX-XXX-XXXX	6	22	19	PM19B-XX	□	□	□	□	□	□	□	□

* For further information on which drill to use and how to use it see page 9.

□ **= Non stock standard. Subject to change refer to current price- and stock-list**

Note: When ordering Precimaster reamers for intermediate diameters, please state diameter and tolerance of hole to be reamed.

Ordering example: PM60-16,515 P7-EB25,CP20.

Cutting data – PM...-EB845

SMG		a_p (Ø)		f		V_c				
		z=4	z=6	z=4	z=6	H15	CP20	RX2000	CF	RX1500
P3	PM50/PM60/PM55-EB845	0,10-0,20	0,1-0,30	0,20-0,60	0,20-0,90		60 (30-100)	80 (30-150)	180 (90-200)	220 (120-300)
P4	PM50/PM60/PM55-EB845	0,10-0,20	0,1-0,30	0,10-0,50	0,20-0,70		50 (30-80)	60 (30-120)	120 (80-150)	180 (90-200)
P5	PM50/PM60/PM55-EB845	0,10-0,20	0,1-0,30	0,10-0,50	0,20-0,70	20 (10-25)	50 (30-80)	60 (30-120)	120 (80-150)	180 (90-200)
P6	PM50/PM60/PM55-EB845	0,10-0,20	0,1-0,30	0,10-0,50	0,20-0,70	20 (10-25)	50 (30-80)	60 (30-120)	120 (80-150)	180 (90-200)
P7	PM50/PM60/PM55-EB845	0,10-0,20	0,1-0,30	0,10-0,50	0,20-0,70	20 (10-25)	50 (30-80)	60 (30-120)	120 (80-150)	180 (90-200)
P8	PM50/PM60/PM55-EB845	0,10-0,20	0,1-0,30	0,10-0,50	0,20-0,70	15 (10-20)	35 (20-60)	40 (20-80)	80 (60-120)	120 (80-180)
P11	PM50/PM60/PM55-EB845	0,10-0,20	0,1-0,30	0,10-0,50	0,20-0,70	15 (10-20)	35 (20-60)	40 (20-80)	80 (60-120)	120 (80-180)
M1	PM50/PM60/PM55-EB845	0,08-0,15	0,10-0,20	0,10-0,40	0,20-0,60	12 (9-15)	25 (15-40)	35 (20-70)		
M2	PM50/PM60/PM55-EB845	0,08-0,15	0,10-0,20	0,10-0,40	0,20-0,60		25 (15-40)	35 (20-70)		
M3	PM50/PM60/PM55-EB845	0,08-0,15	0,10-0,20	0,10-0,40	0,20-0,60		25 (15-40)	35 (20-70)		
M4	PM50/PM60/PM55-EB845	0,08-0,15	0,10-0,20	0,10-0,40	0,20-0,60		20 (10-30)	25 (15-50)		
M5	PM50/PM60/PM55-EB845	0,08-0,15	0,10-0,20	0,10-0,40	0,20-0,60		20 (10-30)	25 (15-50)		
K1	PM50/PM60/PM55-EB845	0,10-0,20	0,10-0,25	0,20-0,60	0,20-0,90	25 (15-30)	60 (40-100)	80 (30-150)		220 (120-300)
K2	PM50/PM60/PM55-EB845	0,10-0,20	0,10-0,25	0,20-0,60	0,20-0,90		25 (20-40)	40 (30-70)		80 (50-100)
K3	PM50/PM60/PM55-EB845	0,10-0,20	0,10-0,25	0,20-0,60	0,20-0,90	25 (15-30)	60 (40-100)	80 (30-150)		220 (120-300)
K4	PM50/PM60/PM55-EB845	0,10-0,20	0,10-0,25	0,20-0,60	0,20-0,90	25 (15-30)	45 (30-70)	70 (40-120)	100 (70-150)	150 (80-200)
K5	PM50/PM60/PM55-EB845	0,10-0,20	0,10-0,25	0,20-0,60	0,20-0,90	25 (15-30)	45 (30-70)	70 (40-120)	100 (70-150)	150 (80-200)
K6	PM50/PM60/PM55-EB845	0,10-0,20	0,10-0,25	0,20-0,60	0,20-0,90		60 (40-100)	80 (30-150)		220 (120-300)
K7	PM50/PM60/PM55-EB845	0,10-0,20	0,10-0,25	0,20-0,60	0,20-0,90		60 (40-100)	80 (30-150)		220 (120-300)
S1	PM50/PM60/PM55-EB845	0,08-0,15	0,10-0,15	0,10-0,40	0,20-0,60		20 (10-25)	20 (10-25)		
S2	PM50/PM60/PM55-EB845	0,08-0,15	0,10-0,15	0,10-0,40	0,20-0,60		20 (10-25)	20 (10-25)		
S3	PM50/PM60/PM55-EB845	0,08-0,15	0,10-0,15	0,10-0,40	0,20-0,60		20 (10-25)	20 (10-25)		
S11	PM50/PM60/PM55-EB845	0,08-0,15	0,10-0,15	0,10-0,40	0,20-0,60	20 (15-30)	30 (15-40)	40 (20-50)		
S12	PM50/PM60/PM55-EB845	0,08-0,15	0,10-0,15	0,10-0,40	0,20-0,60	20 (15-30)	30 (15-40)	40 (20-50)		
S13	PM50/PM60/PM55-EB845	0,08-0,15	0,10-0,15	0,10-0,40	0,20-0,60	20 (15-30)	30 (15-40)	40 (20-50)		
H3	PM50/PM60/PM55-EB845	0,08-0,15	0,10-0,15	0,10-0,30	0,20-0,40			10 (8-15)		
H5	PM50/PM60/PM55-EB845	0,08-0,15	0,10-0,15	0,10-0,30	0,20-0,40			10 (8-15)		
H7	PM50/PM60/PM55-EB845	0,08-0,15	0,10-0,15	0,10-0,30	0,20-0,40			10 (8-15)		
H8	PM50/PM60/PM55-EB845	0,08-0,15	0,10-0,15	0,10-0,30	0,20-0,40			10 (8-15)		
H11	PM50/PM60/PM55-EB845	0,08-0,15	0,10-0,15	0,10-0,30	0,20-0,40			10 (8-15)		
H12	PM50/PM60/PM55-EB845	0,08-0,15	0,10-0,15	0,10-0,30	0,20-0,40			10 (8-15)		
H21	PM50/PM60/PM55-EB845	0,08-0,15	0,10-0,15	0,10-0,30	0,20-0,40			10 (8-15)		
H31	PM50/PM60/PM55-EB845	0,08-0,15	0,10-0,15	0,10-0,30	0,20-0,40			10 (8-15)		
PM1	PM50/PM60/PM55-EB845	0,10-0,20	0,1-0,30	0,10-0,40	0,20-0,60		50 (30-80)	70 (40-100)		
PM2	PM50/PM60/PM55-EB845	0,10-0,20	0,1-0,30	0,10-0,40	0,20-0,60		50 (30-80)	70 (40-100)		
PM3	PM50/PM60/PM55-EB845	0,10-0,20	0,1-0,30	0,10-0,40	0,20-0,60		50 (30-80)	70 (40-100)		

Cutting data – PM...-EB25

SMG		a_p (Ø)		f		V_c				
		z=4	z=6	z=4	z=6	H15	CP20	RX2000	CF	RX1500
P1	PM50/PM60/PM55-EB25	0,10-0,20	0,1-0,30	0,5-1,20	0,80-1,80	25 (15-30)	60 (30-100)	80 (30-150)	180 (90-200)	220 (120-300)
P2	PM50/PM60/PM55-EB25	0,10-0,20	0,1-0,30	0,5-1,20	0,80-1,80	25 (15-30)	60 (30-100)	80 (30-150)	180 (90-200)	220 (120-300)
P3	PM50/PM60/PM55-EB25	0,10-0,20	0,1-0,30	0,5-1,20	0,80-1,80	25 (15-30)	60 (30-100)	80 (30-150)	180 (90-200)	220 (120-300)
P4	PM50/PM60/PM55-EB25	0,10-0,20	0,1-0,30	0,5-1,20	0,80-1,80	20 (10-25)	50 (30-80)	60 (30-120)	120 (80-150)	180 (90-200)
P5	PM50/PM60/PM55-EB25	0,10-0,20	0,1-0,30	0,5-1,20	0,80-1,80	20 (10-25)	50 (30-80)	60 (30-120)	120 (80-150)	180 (90-200)
P6	PM50/PM60/PM55-EB25	0,10-0,20	0,1-0,30	0,5-1,20	0,80-1,80	20 (10-25)	50 (30-80)	60 (30-120)	120 (80-150)	180 (90-200)
P7	PM50/PM60/PM55-EB25	0,10-0,20	0,1-0,30	0,5-1,20	0,80-1,80	20 (10-25)	50 (30-80)	60 (30-120)	120 (80-150)	180 (90-200)
M1	PM50/PM60/PM55-EB25	0,08-0,15	0,10-0,20	0,5-1	0,8-1,20	-	25 (15-40)	35 (20-70)	-	-
K1	PM50/PM60/PM55-EB25	0,10-0,20	0,10-0,25	0,50-1,80	0,80-2,20	25 (15-30)	60 (40-100)	80 (30-150)	-	220 (120-300)
K2	PM50/PM60/PM55-EB25	0,10-0,20	0,10-0,25	0,50-1,20	0,80-1,80	-	25 (20-40)	40 (30-70)	-	80 (50-100)
K3	PM50/PM60/PM55-EB25	0,10-0,20	0,10-0,25	0,50-1,80	0,80-2,20	25 (15-30)	60 (40-100)	80 (30-150)	-	220 (120-300)
K4	PM50/PM60/PM55-EB25	0,10-0,20	0,10-0,25	0,50-1,80	0,80-2,20	25 (15-30)	45 (30-70)	70 (40-120)	100 (70-150)	150 (80-200)
K5	PM50/PM60/PM55-EB25	0,10-0,20	0,10-0,25	0,50-1,80	0,80-2,20	25 (15-30)	45 (30-70)	70 (40-120)	100 (70-150)	150 (80-200)
K6	PM50/PM60/PM55-EB25	0,10-0,20	0,10-0,25	0,50-1,20	0,80-1,80	-	60 (40-100)	80 (30-150)	-	220 (120-300)
K7	PM50/PM60/PM55-EB25	0,10-0,20	0,10-0,25	0,50-1,20	0,80-1,80	-	60 (40-100)	80 (30-150)	-	220 (120-300)
N1	PM50/PM60/PM55-EB25	0,10-0,20	0,10-0,30	0,50-1,80	0,80-2,20	50 (30-100)	-	-	-	-
N2	PM50/PM60/PM55-EB25	0,10-0,20	0,10-0,30	0,50-1,80	0,80-2,20	50 (30-100)	-	-	-	-
N3	PM50/PM60/PM55-EB25	0,10-0,20	0,10-0,30	0,50-1,80	0,80-2,20	50 (30-100)	-	-	-	-
N11	PM50/PM60/PM55-EB25	0,10-0,20	0,10-0,30	0,50-1,80	0,80-2,20	50 (30-100)	-	-	-	-
PM1	PM50/PM60/PM55-EB25	0,10-0,20	0,1-0,30	0,50-1,80	0,80-2,20	-	50 (30-80)	70 (40-100)	-	-
PM2	PM50/PM60/PM55-EB25	0,10-0,20	0,1-0,30	0,50-1,80	0,80-2,20	-	50 (30-80)	70 (40-100)	-	-
PM3	PM50/PM60/PM55-EB25	0,10-0,20	0,1-0,30	0,50-1,80	0,80-2,20	-	50 (30-80)	70 (40-100)	-	-

Cutting data – PM...-EB45

SMG		a_p (Ø)		f		V_c				
		z=4	z=6	z=4	z=6	H15	CP20	RX2000	CF	RX1500
P1	PM50/PM60/PM55-EB45	0,10-0,20	0,1-0,30	0,20-0,60	0,20-0,90	25 (15-30)	60 (30-100)	80 (30-150)	180 (90-200)	220 (120-300)
P2	PM50/PM60/PM55-EB45	0,10-0,20	0,1-0,30	0,20-0,60	0,20-0,90	25 (15-30)	60 (30-100)	80 (30-150)	180 (90-200)	220 (120-300)
P3	PM50/PM60/PM55-EB45	0,10-0,20	0,1-0,30	0,20-0,60	0,20-0,90	25 (15-30)	60 (30-100)	80 (30-150)	180 (90-200)	220 (120-300)
P4	PM50/PM60/PM55-EB45	0,10-0,20	0,1-0,30	0,10-0,50	0,20-0,70	20 (10-25)	50 (30-80)	60 (30-120)	120 (80-150)	180 (90-200)
P5	PM50/PM60/PM55-EB45	0,10-0,20	0,1-0,30	0,10-0,50	0,20-0,70	20 (10-25)	50 (30-80)	60 (30-120)	120 (80-150)	180 (90-200)
P6	PM50/PM60/PM55-EB45	0,10-0,20	0,1-0,30	0,10-0,50	0,20-0,70	20 (10-25)	50 (30-80)	60 (30-120)	120 (80-150)	180 (90-200)
P7	PM50/PM60/PM55-EB45	0,10-0,20	0,1-0,30	0,10-0,50	0,20-0,70	20 (10-25)	50 (30-80)	60 (30-120)	120 (80-150)	180 (90-200)
P8	PM50/PM60/PM55-EB45	0,10-0,20	0,1-0,30	0,10-0,50	0,20-0,70	15 (10-20)	35 (20-60)	40 (20-80)	80 (60-120)	120 (80-180)
P11	PM50/PM60/PM55-EB45	0,10-0,20	0,1-0,30	0,10-0,50	0,20-0,70	15 (10-20)	35 (20-60)	40 (20-80)	80 (60-120)	120 (80-180)
M1	PM50/PM60/PM55-EB45	0,08-0,15	0,10-0,20	0,10-0,40	0,20-0,60	12 (9-15)	25 (15-40)	35 (20-70)	-	-
M2	PM50/PM60/PM55-EB45	0,08-0,15	0,10-0,20	0,10-0,40	0,20-0,60	-	25 (15-40)	35 (20-70)	-	-
M3	PM50/PM60/PM55-EB45	0,08-0,15	0,10-0,20	0,10-0,40	0,20-0,60	-	25 (15-40)	35 (20-70)	-	-
M4	PM50/PM60/PM55-EB45	0,08-0,15	0,10-0,20	0,10-0,40	0,20-0,60	-	20 (10-30)	25 (15-50)	-	-
M5	PM50/PM60/PM55-EB45	0,08-0,15	0,10-0,20	0,10-0,40	0,20-0,60	-	20 (10-30)	25 (15-50)	-	-
K1	PM50/PM60/PM55-EB45	0,10-0,20	0,10-0,25	0,20-0,60	0,20-0,90	25 (15-30)	60 (40-100)	80 (30-150)	-	220 (120-300)
K2	PM50/PM60/PM55-EB45	0,10-0,20	0,10-0,25	0,20-0,60	0,20-0,90	-	25 (20-40)	40 (30-70)	-	80 (50-100)
K3	PM50/PM60/PM55-EB45	0,10-0,20	0,10-0,25	0,20-0,60	0,20-0,90	25 (15-30)	60 (40-100)	80 (30-150)	-	220 (120-300)
K4	PM50/PM60/PM55-EB45	0,10-0,20	0,10-0,25	0,20-0,60	0,20-0,90	25 (15-30)	45 (30-70)	70 (40-120)	100 (70-150)	150 (80-200)
K5	PM50/PM60/PM55-EB45	0,10-0,20	0,10-0,25	0,20-0,60	0,20-0,90	25 (15-30)	45 (30-70)	70 (40-120)	100 (70-150)	150 (80-200)
K6	PM50/PM60/PM55-EB45	0,10-0,20	0,10-0,25	0,20-0,60	0,20-0,90	-	60 (40-100)	80 (30-150)	-	220 (120-300)
K7	PM50/PM60/PM55-EB45	0,10-0,20	0,10-0,25	0,20-0,60	0,20-0,90	-	60 (40-100)	80 (30-150)	-	220 (120-300)
N1	PM50/PM60/PM55-EB45	0,10-0,20	0,10-0,30	0,20-0,60	0,20-0,90	50 (30-100)	-	80 (30-150)	-	-
N2	PM50/PM60/PM55-EB45	0,10-0,20	0,10-0,30	0,20-0,60	0,20-0,90	50 (30-100)	-	80 (30-150)	-	-
N3	PM50/PM60/PM55-EB45	0,10-0,20	0,10-0,30	0,20-0,60	0,20-0,90	50 (30-100)	-	80 (30-150)	-	-
N11	PM50/PM60/PM55-EB45	0,10-0,20	0,10-0,30	0,20-0,60	0,20-0,90	50 (30-100)	-	80 (30-150)	-	-
S1	PM50/PM60/PM55-EB45	0,08-0,15	0,10-0,15	0,10-0,40	0,20-0,60	-	20 (10-25)	20 (10-25)	-	-
S2	PM50/PM60/PM55-EB45	0,08-0,15	0,10-0,15	0,10-0,40	0,20-0,60	-	20 (10-25)	20 (10-25)	-	-
S3	PM50/PM60/PM55-EB45	0,08-0,15	0,10-0,15	0,10-0,40	0,20-0,60	-	20 (10-25)	20 (10-25)	-	-
S11	PM50/PM60/PM55-EB45	0,08-0,15	0,10-0,15	0,10-0,40	0,20-0,60	20 (15-30)	30 (15-40)	40 (20-50)	-	-
S12	PM50/PM60/PM55-EB45	0,08-0,15	0,10-0,15	0,10-0,40	0,20-0,60	20 (15-30)	30 (15-40)	40 (20-50)	-	-
S13	PM50/PM60/PM55-EB45	0,08-0,15	0,10-0,15	0,10-0,40	0,20-0,60	20 (15-30)	30 (15-40)	40 (20-50)	-	-
H3	PM50/PM60/PM55-EB45	0,08-0,15	0,10-0,15	0,10-0,30	0,20-0,40	-	-	10 (8-15)	-	-
H5	PM50/PM60/PM55-EB45	0,08-0,15	0,10-0,15	0,10-0,30	0,20-0,40	-	-	10 (8-15)	-	-
H7	PM50/PM60/PM55-EB45	0,08-0,15	0,10-0,15	0,10-0,30	0,20-0,40	-	-	10 (8-15)	-	-
H8	PM50/PM60/PM55-EB45	0,08-0,15	0,10-0,15	0,10-0,30	0,20-0,40	-	-	10 (8-15)	-	-
H11	PM50/PM60/PM55-EB45	0,08-0,15	0,10-0,15	0,10-0,30	0,20-0,40	-	-	10 (8-15)	-	-
H12	PM50/PM60/PM55-EB45	0,08-0,15	0,10-0,15	0,10-0,30	0,20-0,40	-	-	10 (8-15)	-	-
H21	PM50/PM60/PM55-EB45	0,08-0,15	0,10-0,15	0,10-0,30	0,20-0,40	-	-	10 (8-15)	-	-
H31	PM50/PM60/PM55-EB45	0,08-0,15	0,10-0,15	0,10-0,30	0,20-0,40	-	-	10 (8-15)	-	-
PM1	PM50/PM60/PM55-EB45	0,10-0,20	0,1-0,30	0,10-0,40	0,20-0,60	-	50 (30-80)	70 (40-100)	-	-
PM2	PM50/PM60/PM55-EB45	0,10-0,20	0,1-0,30	0,10-0,40	0,20-0,60	-	50 (30-80)	70 (40-100)	-	-
PM3	PM50/PM60/PM55-EB45	0,10-0,20	0,1-0,30	0,10-0,40	0,20-0,60	-	50 (30-80)	70 (40-100)	-	-
TS1	PM50/PM60/PM55-EB45	0,10-0,15	0,1-0,20	0,20-0,60	0,20-0,90	20 (15-25)	-	40 (20-60)	-	-
TS2	PM50/PM60/PM55-EB45	0,10-0,15	0,1-0,20	0,20-0,60	0,20-0,90	20 (15-25)	-	40 (20-60)	-	-
TS3	PM50/PM60/PM55-EB45	0,10-0,15	0,1-0,20	0,20-0,60	0,20-0,90	20 (15-25)	-	40 (20-60)	-	-
TS4	PM50/PM60/PM55-EB45	0,10-0,15	0,1-0,20	0,20-0,60	0,20-0,90	20 (15-25)	-	40 (20-60)	-	-
TP1	PM50/PM60/PM55-EB45	0,10-0,15	0,1-0,20	0,20-0,60	0,20-0,90	20 (15-25)	-	40 (20-60)	-	-
TP2	PM50/PM60/PM55-EB45	0,10-0,15	0,1-0,20	0,20-0,60	0,20-0,90	20 (15-25)	-	40 (20-60)	-	-
TP3	PM50/PM60/PM55-EB45	0,10-0,15	0,1-0,20	0,20-0,60	0,20-0,90	20 (15-25)	-	40 (20-60)	-	-
TP4	PM50/PM60/PM55-EB45	0,10-0,15	0,1-0,20	0,20-0,60	0,20-0,90	20 (15-25)	-	40 (20-60)	-	-
GR1	PM50/PM60/PM55-EB45	0,10-0,30	0,1-0,40	0,20-0,60	0,20-0,90	40 (80-20)	-	60 (30-120)	-	-

SMG = Seco material group
a_p = mm
f = mm/rev
v_c= m/min
All cutting data are start values

Custom design – No waiting for quotations – Short delivery time

Custom Design is also available for Precimaster reamers and tool holders.
You can now quote for your own intermediate Ø reamer and tailor made Precimaster tool holder using the Seco Custom Design software.
Easy to use concept: Just indicate component min/max Ø or use ISO tolerance system available in the software.
Precimaster head designation is created automatically.
Custom Design gives you a number of advantages:

- No waiting for quotations! Price and delivery time available instantly!
- Directly visualises your needs. No risk of misunderstandings
- Short delivery time



Please contact your local Seco representative for more information.

Troubleshooting

Poor surface finish

- Check material allowance.
- Improve coolant conditions (outlet type, pressure, quality).
- Reduce feed rate.

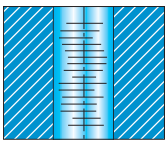

Too large diameter

- Improve centring (part/tool).

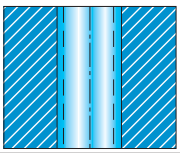

Retraction marks

- Improve coolant conditions (outlet type, pressure, quality).
- Improve centring (part/tool).
- Reduce feed-out speed.

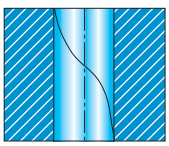

Facets

- Improve centring (part/tool).
- Check material allowance.

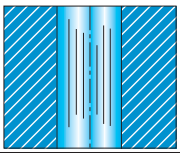

Tapered entry

- Reduce feed rate.
- Improve centring (part/tool).
- Reduce radial run-out.

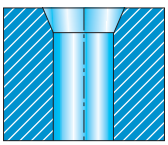

Off centre/Ovality

- Improve clamping (workpiece deformation).
- Check material allowance.
- Improve centring (part/tool).

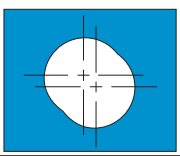

Deformed hole

- Improve clamping (workpiece deformation).

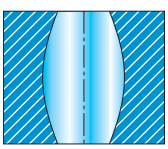

Tapered hole

- Improve centring (part/tool).

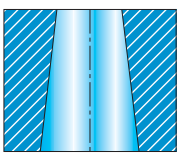

Regrinding instructions for Precimaster

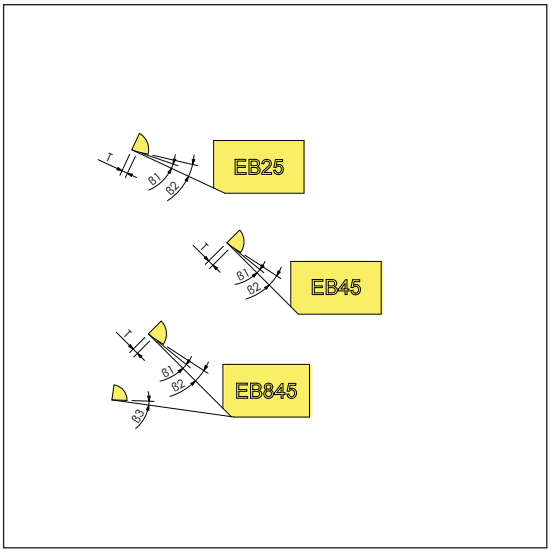

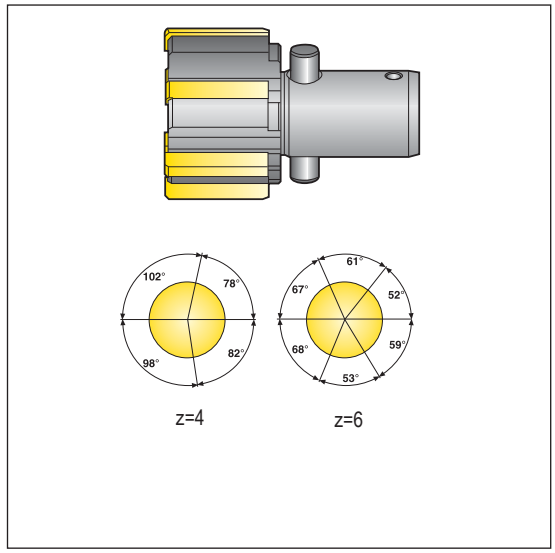

∅ Precimaster	β_1	β_2	β_3	t
9,520–21,499	6°	15°	6°	0,15
21,500–26,499	6°	15°	6°	0,20
26,500–38,499	6°	15°	6°	0,25
38,500–48,499	6°	15°	6°	0,30
48,500–60,499	6°	15°	6°	0,40

Specifications

Diamond grinding wheel
Grain size:
D6 – For first clearance angle (β1–β3)
D64 – For second clearance angle (β2)

Important:

Regrinding reduces reamer diameter
Recoating may produce oversized diameter
Max run-out on lead chamfers 10 µm



Range overview

Precimaster™ Plus	∅ Range	Reaming depth	Hole tolerance	Intermediate diameters	Surface finish
PMX5/PMX6 	10-60	~ 2–3 x D	IT 6–7–8	Yes, available through Custom Design	R_a 0,4–0,8 µm
PMX5/PMX6 	10-60	~ 4–5 x D	IT 6–7–8	Yes, available through Custom Design	R_a 0,4–0,8 µm
PMX5/PMX6 	10-60	~ 8–10 x D	IT 6–7–8	Yes, available through Custom Design	R_a 0,4–0,8 µm

Code key tool shank

Reamer body size	Max reaming depth		Neutral	
PMX08	- 08200	- 20	- N	1
		Cyl. shank diameter		Type of shank 1. Cylindrical DIN1835



Precimaster Plus toolholders are suitable for both blind and through holes.

Code key head

Head type		Entrance geometry	
PMX6	- 18H7	- EB45	- RX2000
	Hole dia and hole tolerance		Carbide grade



Code key head intermediate diameter

Head type		Entrance geometry	
PMX5	- 15,515 P7	- EB845	- RX2000
	Hole dia and hole tolerance		Carbide grade



PMX5 : Straight flutes design, suitable for blind and through bores.
PMX6 : Helical flutes design, suitable for through bores only.
The left hand flutes design improves the action of pushing the chips forward.
See Precimaster Plus head choice page 343.

Coolant outlet set-up

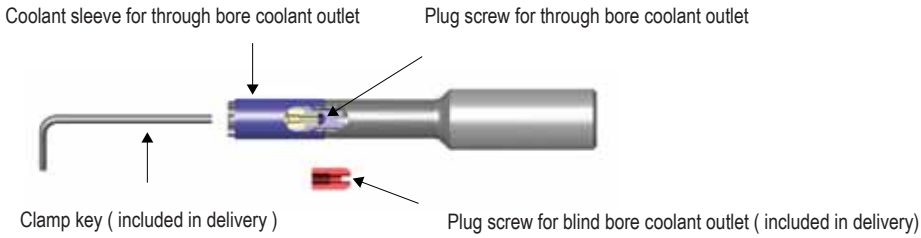

Note : Precimaster Plus tool holders are pre-set from factory for through bores coolant outlet.

BLIND BORE COOLANT SET UP PROCEDURE :

1) dismount plug screw for through bore
Note : plug screws are LH screw



Body size	Flat blade screw driver size	Allen Key size
		
PMX06	1,0x5,5x150	2,5 x 150
PMX08	1,2x6,5x200	3 x 200
PMX12	1,2x8x175	5 x 175

2) Remove coolant sleeve for through bore



3) Mount plug screw for blind bore coolant outlet
Note : plug screws are LH screw



Head mounting



PMX5 : Suitable for through and blind bore



PMX6 : Suitable for through bore only

1) Align index groove with dot on body

1









2) Place head into body
3) Push head inside body untill 'click' is achieved
4) Clamp head with Allen clamp key



2



3

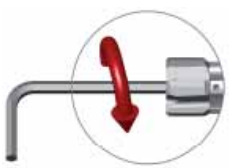

4

Note : Use of torque key is not required for Precimaster Plus head clamping

Set up – Run-out

Rotating tool

Max recommended run-out : see table
Hydraulic chuck , Shrinkfit, holder or precision collet holder is recommended
For best run-out control, use adjustable adapter, see pages 458-465
∅10 - ∅60 Max 10µm.

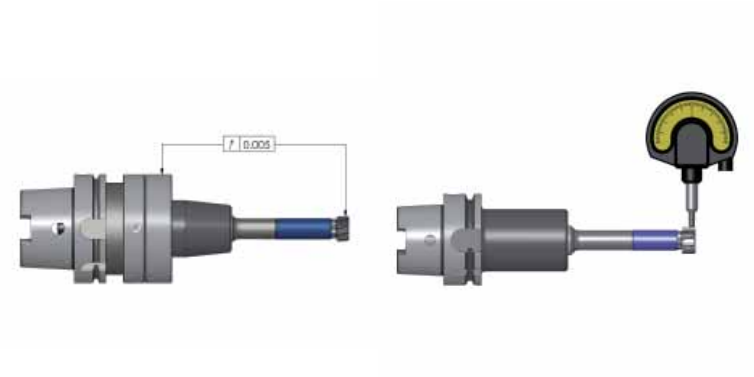

Static tool

Use a Seco floating holder, see page 469-473.



Floating holders allow reamer self-centring in pre-bore.

Coolant requirements

To reach maximum tool life and hole quality, the following coolant requirements should be observed.
Coolant through the tool is recommended.
External coolant supply can be used if reaming depth < 2 x D.
Quality soluble oil with 40% minimum mineral oil.
Neat oil recommended for stainless steel.
Concentration minimum 6–8%.
Filtration 30–50 µm.
Volume min 0,5 l/min/mm in tool diameter. (Ex: Reamer ∅ 10, min volume is 5 l/min).

Diameter measurement



Gauge clock micrometer prior to ∅ measurement.

Important!

Precimaster reamers have differential pitch between the teeth.
When measuring the diameter, make sure that you have 2 teeth 180° opposite.

Use clock micrometer and measuring blocks for gauging.

Head choice – Choose cutting head style according to application and diameter

Workpiece	Diameter to ream ∅ 10-60	
Short through hole < 3 x D 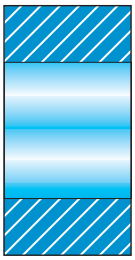	PMX5 	
Long through hole > 3 x D 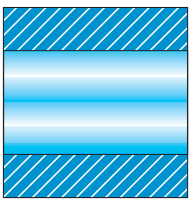	PMX6 	
Crossing hole 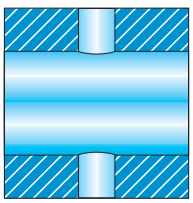	For through bore application, toolholder coolant outlet must be set for through holes: see coolant set up pages	
Blind hole 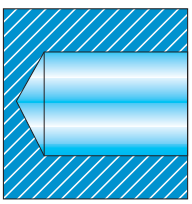	PMX5 	
Blind and crossing hole 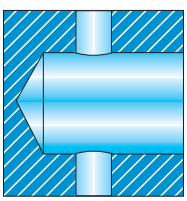	For blind bore application, toolholder coolant outlet must be set for blind holes: see coolant set up pages	

Geometry choice – Applications

Lead geometry - EB45

Chip control +++
Surface Finish + (R_a 0,8 - 1,2 µm)
Versatile

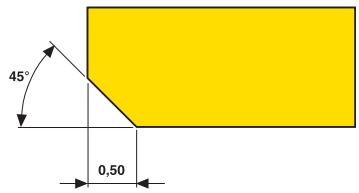

Lead geometry - EB845

Chip control ++
Surface finish+++ (R_a 0,2 - 0,8 µm)

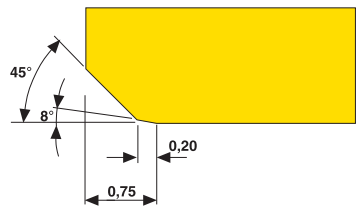

Lead geometry - EB25

Feed performance +++
Surface finish ++ (R_a 0,4 - 0,8 µm)
Chip control +

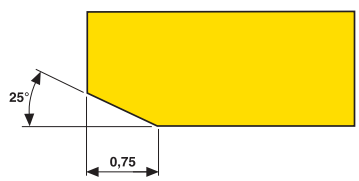

Grades

	**CP20**	**Coated** A versatile coated grade suitable for most materials, except aluminium. TiN
	**H15**	**Uncoated** A tough micrograin grade for all materials. Suitable for fine-reaming operations due to edge sharpness.
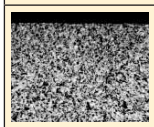	**CF**	**Cermet** A wear resistant grade for performance optimization in steel.
	**RX1500**	**Coated Cermet** A wear resistant coated grade for performance optimization in steel and cast iron.
	**RX2000**	**Coated** High performance coated grade suitable for all materials.

Heads for through and blind holes ∅ 10 to 32



- Cutting data see pages 351-352
- For choice of geometry EB45, EB845 or EB25, please see page 344

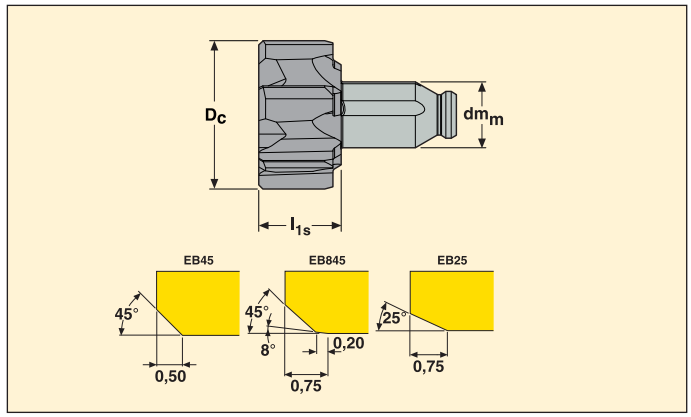

Dc	Drill size*	Part No.		l1s	dmm	Body size	Geometries			Grades				
							EB45	EB845	EB25	H15	CP20	RX2000	CF	RX1500
10	9.8/9.9	**PMX5-10H7-EB45**	6	7	6	PMX06-xx	■	□	□	□	□	□	□	□
11	10.8/10.9	**PMX5-11H7-EB45**	6	7	6	PMX06-xx	■	□	□	□	□	■	□	□
12	11.8/11.908	**PMX5-12H7-EB45**	6	7	6	PMX06-xx	■	□	□	□	□	■	■	□
13	12.8/12.9	**PMX5-13H7-EB45**	6	7	6	PMX06-xx	■	□	□	□	□	■	■	□
14	13.8/13.891	**PMX5-14H7-EB45**	6	7	6	PMX06-xx	■	□	□	□	□	■	■	□
15	14.8/14.9	**PMX5-15H7-EB45**	6	10	8	PMX08-xx	■	□	□	□	□	■	■	□
16	15.8/15.9	**PMX5-16H7-EB45**	6	10	8	PMX08-xx	■	□	□	□	□	■	■	□
17	16.8/16.9	**PMX5-17H7-EB45**	6	10	8	PMX08-xx	■	□	□	□	□	■	■	□
18	17.8/17.9	**PMX5-18H7-EB45**	6	10	8	PMX08-xx	■	□	□	□	□	■	■	□
19	18.8/18.9	**PMX5-19H7-EB45**	6	10	8	PMX08-xx	■	□	□	□	□	■	□	□
20	19.8/19.9	**PMX5-20H7-EB45**	6	10	8	PMX08-xx	■	□	□	□	□	■	■	□
21	20.8/20.9	**PMX5-21H7-EB45**	6	10	8	PMX08-xx	■	□	□	□	□	■	□	□
22	21.8/21.9	**PMX5-22H7-EB45**	8	12	12	PMX12-xx	■	□	□	□	□	■	■	□
23	22.8/22.9	**PMX5-23H7-EB45**	8	12	12	PMX12-xx	■	□	□	□	□	■	□	□
24	23.813/23.9	**PMX5-24H7-EB45**	8	12	12	PMX12-xx	■	□	□	□	□	■	■	□
25	24.8/24.9	**PMX5-25H7-EB45**	8	12	12	PMX12-xx	■	□	□	□	□	■	■	□
26	25.8/25.9	**PMX5-26H7-EB45**	8	12	12	PMX12-xx	■	□	□	□	□	■	■	□
27	26.8/26.9	**PMX5-27H7-EB45**	8	12	12	PMX12-xx	■	□	□	□	□	■	□	□
28	27.8/27.9	**PMX5-28H7-EB45**	8	12	12	PMX12-xx	■	□	□	□	□	■	■	□
29	28.8/28.9	**PMX5-29H7-EB45**	8	12	12	PMX12-xx	■	□	□	□	□	■	□	□
30	29.8/29.9	**PMX5-30H7-EB45**	8	12	12	PMX12-xx	■	□	□	□	□	■	■	□
31	30.8/30.9	**PMX5-31H7-EB45**	8	12	12	PMX12-xx	■	□	□	□	□	■	□	□
32	31.8/31.9	**PMX5-32H7-EB45**	8	12	12	PMX12-xx	■	□	□	□	□	■	■	□

* For further information on which drill to use and how to use it see page 9.

■ **Stock standard, □ = Non stock standard. Subject to change refer to current price- and stock-list.**

Heads for through holes ∅ 10 to 32



- Cutting data see pages 351-352
- For choice of geometry EB45, EB845 or EB25, please see page 344

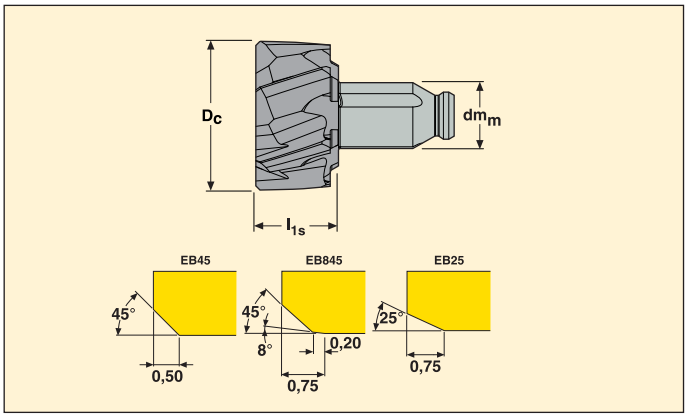

Dc	Drill size*	Part No.		l1s	dmm	Body size	Geometries			Grades				
							EB45	EB845	EB25	H15	CP20	RX2000	CF	RX1500
10	9.8/9.9	PMX6-10H7-EB45	6	7	6	PMX06-xx	■	□	□	□	□	□	□	□
11	10.8/10.9	PMX6-11H7-EB45	6	7	6	PMX06-xx	■	□	□	□	□	■	□	□
12	11.8/11.908	PMX6-12H7-EB45	6	7	6	PMX06-xx	■	□	□	□	□	■	□	□
13	12.8/12.9	PMX6-13H7-EB45	6	7	6	PMX06-xx	■	□	□	□	□	■	□	□
14	13.8/13.891	PMX6-14H7-EB45	6	7	6	PMX06-xx	■	□	□	□	□	■	□	□
15	14.8/14.9	PMX6-15H7-EB45	6	10	8	PMX08-xx	■	□	□	□	□	■	□	□
16	15.8/15.9	PMX6-16H7-EB45	6	10	8	PMX08-xx	■	□	□	□	□	■	□	□
17	16.8/16.9	PMX6-17H7-EB45	6	10	8	PMX08-xx	■	□	□	□	□	■	□	□
18	17.8/17.9	PMX6-18H7-EB45	6	10	8	PMX08-xx	■	□	□	□	□	■	□	□
19	18.8/18.9	PMX6-19H7-EB45	6	10	8	PMX08-xx	■	□	□	□	□	■	□	□
20	19.8/19.9	PMX6-20H7-EB45	6	10	8	PMX08-xx	■	□	□	□	□	■	□	□
21	20.8/20.9	PMX6-21H7-EB45	6	10	8	PMX08-xx	■	□	□	□	□	■	□	□
22	21.8/21.9	PMX6-22H7-EB45	8	12	12	PMX12-xx	■	□	□	□	□	■	□	□
23	22.8/22.9	PMX6-23H7-EB45	8	12	12	PMX12-xx	■	□	□	□	□	■	□	□
24	23.813/23.9	PMX6-24H7-EB45	8	12	12	PMX12-xx	■	□	□	□	□	■	□	□
25	24.8/24.9	PMX6-25H7-EB45	8	12	12	PMX12-xx	■	□	□	□	□	■	□	□
26	25.8/25.9	PMX6-26H7-EB45	8	12	12	PMX12-xx	■	□	□	□	□	■	□	□
27	26.8/26.9	PMX6-27H7-EB45	8	12	12	PMX12-xx	■	□	□	□	□	■	□	□
28	27.8/27.9	PMX6-28H7-EB45	8	12	12	PMX12-xx	■	□	□	□	□	■	□	□
29	28.8/28.9	PMX6-29H7-EB45	8	12	12	PMX12-xx	■	□	□	□	□	■	□	□
30	29.8/29.9	PMX6-30H7-EB45	8	12	12	PMX12-xx	■	□	□	□	□	■	□	□
31	30.8/30.9	PMX6-31H7-EB45	8	12	12	PMX12-xx	■	□	□	□	□	■	□	□
32	31.8/31.9	PMX6-32H7-EB45	8	12	12	PMX12-xx	■	□	□	□	□	■	□	□

* For further information on which drill to use and how to use it see page 9.

■ **Stock standard, □ = Non stock standard. Subject to change refer to current price- and stock-list.**

Shanks for through and blind holes ∅ 10 to 60



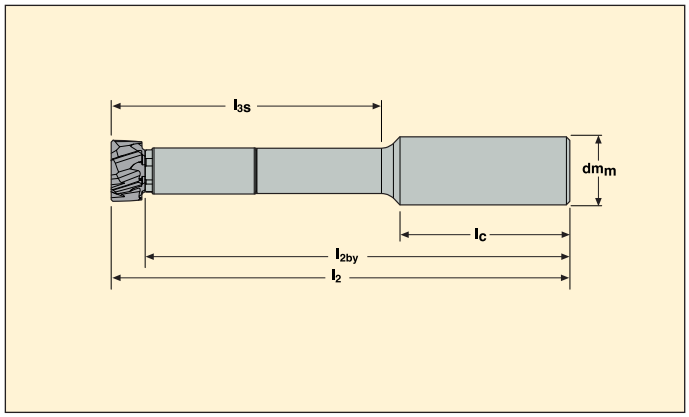

- Cutting data see pages 351-352
- For choice of lead geometry EB45, EB845 or EB25 see page 344

D_c	Tool holder material	Part No.	Dimensions in mm				
			l_2	l_{2by}	l_{3s}	l_c	dm_m
10-14,499	Steel	**PMX06-03700-12N1**	84	77	37	45	12
	Steel	**PMX06-05700-12N1**	104	97	57	45	12
	Steel	**PMX06-12000-12N1**	167	160	120	45	12
	Carbide	**PMX06HM-12000-12N1**	167	160	120	45	12
14,5-21,499	Steel	**PMX08-04600-20N1**	99	89	46	50	20
	Steel	**PMX08-08200-20N1**	135	125	82	50	20
	Steel	**PMX08-14500-20N1**	198	188	145	50	20
	Carbide	**PMX08HM-14500-20N1**	198	188	145	50	20
21,5-32,499	Steel	**PMX12-06800-25N1**	127	115	68	56	25
	Steel	**PMX12-10400-25N1**	163	151	104	56	25
	Steel	**PMX12-17000-25N1**	229	217	170	56	25
	Carbide	**PMX12HM-17000-25N1**	229	217	170	56	25
32,5-60	Steel	**PMX16-06300-32N1**	124	110	63	61	32
	Steel	**PMX16-12700-32N1**	188	174	127	61	32
	Steel	**PMX16-17000-32N1**	231	217	170	61	32
	Carbide	**PMX16HM-17000-32N1**	231	217	170	61	32

Spare parts

Plug, through hole	Plug, blind hole	Key	Coolant kit	Clamp kit
ST06	SB06	2SMS795	RT06-KI	PMX06-CLKI
ST08	SB08	2.5SMS795	RT08-KI	PMX08-CLKI
ST12	SB12	4SMS795	RT12-KI	PMX12-CLKI
ST16	SB16	5SMS795		PMX16-CLKI

* To be ordered separately.

Heads for through and blind holes Custom design ∅ 10 to 60



- Cutting data see pages 351-352
- For choice of geometry EB45, EB845 or EB25, please see page 344

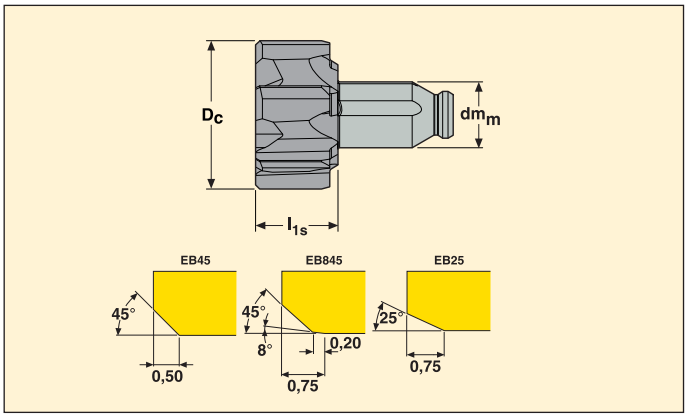

D_c	Part No.		l_{1s}	dm_m	Body size	Geometries			Grades				
						EB45	EB845	EB25	H15	CP20	RX2000	CF	RX1500
10-14,499	**PMX5-XX-XXX-XXXX**	6	7	6	PMX06-XX	□	□	□	□	□	□	□	□
14,5-21,499	**PMX5-XX-XXX-XXXX**	6	10	8	PMX08-XX	□	□	□	□	□	□	□	□
21,5-32,499	**PMX5-XX-XXX-XXXX**	8	12	12	PMX12-XX	□	□	□	□	□	□	□	□
32,5-60	**PMX5-XX-XXX-XXXX**	10	14	16	PMX16-XX	□	□	□	□	□	□	□	□

* For further information on which drill to use and how to use it see page 9.

□ **= Non stock standard. Subject to change refer to current price- and stock-list**

Note: When ordering Precimaster reamers for intermediate diameters, please state diameter and tolerance of hole to be reamed.

Ordering example: PMX60-16.515 P7-EB45 CP20.

Heads for through holes Custom design ∅ 10 to 60



- Cutting data see pages 351-352
- For choice of geometry EB45, EB845 or EB25, please see page 344

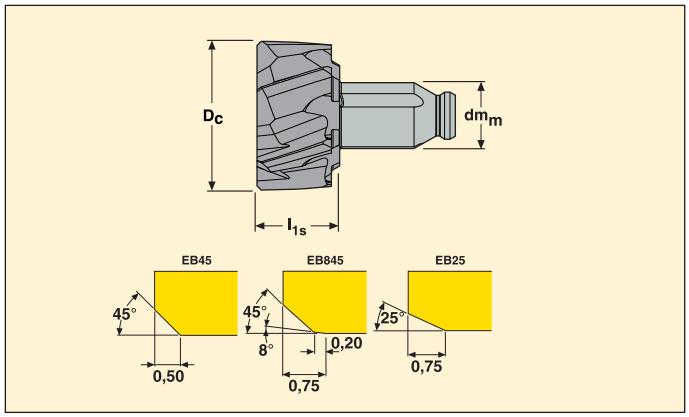

D_c	Part No.		l_{1s}	dm_m	Body size	Geometries			Grades				
						EB45	EB845	EB25	H15	CP20	RX2000	CF	RX1500
10-14,99	**PMX6-XX-XXX-XXXX**	6	7	6	PMX06-XX	□	□	□	□	□	□	□	□
14,5-21,499	**PMX6-XX-XXX-XXXX**	6	10	8	PMX08-XX	□	□	□	□	□	□	□	□
21,5-32,499	**PMX6-XX-XXX-XXXX**	8	12	12	PMX12-XX	□	□	□	□	□	□	□	□
32,5-60	**PMX6-XX-XXX-XXXX**	10	14	16	PMX16-XX	□	□	□	□	□	□	□	□

* For further information on which drill to use and how to use it see page 9.

□ **= Non stock standard. Subject to change refer to current price- and stock-list**

Note: When ordering Precimaster reamers for intermediate diameters, please state diameter and tolerance of hole to be reamed.

Ordering example: PMX60-16.515 P7-EB45 CP20.

Cutting data – PM Plus...-EB845

SMG		a_p (Ø)		f		V_c				
		z=6	z=8	z=6	z=8	H15	CP20	RX2000	CF	RX1500
P3	PMX5/PMX6-EB845	0,10-0,20	0,1-0,30	0,20-0,90	0,3-1,20	-	60 (30-100)	80 (30-150)	180 (90-200)	220 (120-300)
P4	PMX5/PMX6-EB845	0,10-0,20	0,1-0,30	0,20-0,70	0,30-0,90	-	50 (30-80)	60 (30-120)	120 (80-150)	180 (90-200)
P5	PMX5/PMX6-EB845	0,10-0,20	0,1-0,30	0,20-0,70	0,30-0,90	20 (10-25)	50 (30-80)	60 (30-120)	120 (80-150)	180 (90-200)
P6	PMX5/PMX6-EB845	0,10-0,20	0,1-0,30	0,20-0,70	0,30-0,90	20 (10-25)	50 (30-80)	60 (30-120)	120 (80-150)	180 (90-200)
P7	PMX5/PMX6-EB845	0,10-0,20	0,1-0,30	0,20-0,70	0,30-0,90	20 (10-25)	50 (30-80)	60 (30-120)	120 (80-150)	180 (90-200)
P8	PMX5/PMX6-EB845	0,10-0,20	0,1-0,30	0,20-0,70	0,30-0,90	15 (10-20)	35 (20-60)	40 (20-80)	80 (60-120)	120 (80-180)
P11	PMX5/PMX6-EB845	0,10-0,20	0,1-0,30	0,20-0,70	0,30-0,90	15 (10-20)	35 (20-60)	40 (20-80)	80 (60-120)	120 (80-180)
M1	PMX5/PMX6-EB845	0,08-0,15	0,10-0,20	0,20-0,60	0,30-0,80	12 (9-15)	25 (15-40)	35 (20-70)	-	-
M2	PMX5/PMX6-EB845	0,08-0,15	0,10-0,20	0,20-0,60	0,30-0,80	-	25 (15-40)	35 (20-70)	-	-
M3	PMX5/PMX6-EB845	0,08-0,15	0,10-0,20	0,20-0,60	0,30-0,80	-	25 (15-40)	35 (20-70)	-	-
M4	PMX5/PMX6-EB845	0,08-0,15	0,10-0,20	0,20-0,60	0,30-0,80	-	20 (10-30)	25 (15-50)	-	-
M5	PMX5/PMX6-EB845	0,08-0,15	0,10-0,20	0,20-0,60	0,30-0,80	-	20 (10-30)	25 (15-50)	-	-
K1	PMX5/PMX6-EB845	0,10-0,20	0,10-0,25	0,30-0,90	0,3-1,20	25 (15-30)	60 (40-100)	80 (30-150)	-	220 (120-300)
K2	PMX5/PMX6-EB845	0,10-0,20	0,10-0,25	0,30-0,90	0,3-1,20		25 (20-40)	40 (30-70)	-	80 (50-100)
K3	PMX5/PMX6-EB845	0,10-0,20	0,10-0,25	0,30-0,90	0,3-1,20	25 (15-30)	60 (40-100)	80 (30-150)	-	220 (120-300)
K4	PMX5/PMX6-EB845	0,10-0,20	0,10-0,25	0,30-0,90	0,3-1,20	25 (15-30)	45 (30-70)	70 (40-120)	100 (70-150)	150 (80-200)
K5	PMX5/PMX6-EB845	0,10-0,20	0,10-0,25	0,30-0,90	0,3-1,20	25 (15-30)	45 (30-70)	70 (40-120)	100 (70-150)	150 (80-200)
K6	PMX5/PMX6-EB845	0,10-0,20	0,10-0,25	0,30-0,90	0,3-1,20	-	60 (40-100)	80 (30-150)	-	220 (120-300)
K7	PMX5/PMX6-EB845	0,10-0,20	0,10-0,25	0,30-0,90	0,3-1,20	-	60 (40-100)	80 (30-150)	-	220 (120-300)
S1	PMX5/PMX6-EB845	0,08-0,15	0,10-0,15	0,20-0,60	0,30-0,80	-	20 (10-25)	20 (10-25)	-	-
S2	PMX5/PMX6-EB845	0,08-0,15	0,10-0,15	0,20-0,60	0,30-0,80	-	20 (10-25)	20 (10-25)	-	-
S3	PMX5/PMX6-EB845	0,08-0,15	0,10-0,15	0,20-0,60	0,30-0,80	-	20 (10-25)	20 (10-25)	-	-
S11	PMX5/PMX6-EB845	0,08-0,15	0,10-0,15	0,20-0,60	0,30-0,80	20 (15-30)	30 (15-40)	40 (20-50)	-	-
S12	PMX5/PMX6-EB845	0,08-0,15	0,10-0,15	0,20-0,60	0,30-0,80	20 (15-30)	30 (15-40)	40 (20-50)	-	-
S13	PMX5/PMX6-EB845	0,08-0,15	0,10-0,15	0,20-0,60	0,30-0,80	20 (15-30)	30 (15-40)	40 (20-50)	-	-
H3	PMX5/PMX6-EB845	0,08-0,15	0,10-0,15	0,20-0,40	0,30-0,55	-	-	10 (8-15)	-	-
H5	PMX5/PMX6-EB845	0,08-0,15	0,10-0,15	0,20-0,40	0,30-0,55	-	-	10 (8-15)	-	-
H7	PMX5/PMX6-EB845	0,08-0,15	0,10-0,15	0,20-0,40	0,30-0,55	-	-	10 (8-15)	-	-
H8	PMX5/PMX6-EB845	0,08-0,15	0,10-0,15	0,20-0,40	0,30-0,55	-	-	10 (8-15)	-	-
H11	PMX5/PMX6-EB845	0,08-0,15	0,10-0,15	0,20-0,40	0,30-0,55	-	-	10 (8-15)	-	-
H12	PMX5/PMX6-EB845	0,08-0,15	0,10-0,15	0,20-0,40	0,30-0,55	-	-	10 (8-15)	-	-
H21	PMX5/PMX6-EB845	0,08-0,15	0,10-0,15	0,20-0,40	0,30-0,55	-	-	10 (8-15)	-	-
H31	PMX5/PMX6-EB845	0,08-0,15	0,10-0,15	0,20-0,40	0,30-0,55	-	-	10 (8-15)	-	-
PM1	PMX5/PMX6-EB845	0,10-0,20	0,1-0,30	0,20-0,60	0,30-0,80	-	50 (30-80)	70 (40-100)	-	-
PM2	PMX5/PMX6-EB845	0,10-0,20	0,1-0,30	0,20-0,60	0,30-0,80	-	50 (30-80)	70 (40-100)	-	-
PM3	PMX5/PMX6-EB845	0,10-0,20	0,1-0,30	0,20-0,60	0,30-0,80	-	50 (30-80)	70 (40-100)	-	-

Cutting data – PM Plus...-EB25

SMG		a_p (Ø)		f		V_c				
		z=6	z=8	z=6	z=8	H15	CP20	RX2000	CF	RX1500
P1	PMX5/PMX6-EB25	0,10-0,20	0,1-0,30	0,80-1,80	1-2,40	25 (15-30)	60 (30-100)	80 (30-150)	180 (90-200)	220 (120-300)
P2	PMX5/PMX6-EB25	0,10-0,20	0,1-0,30	0,80-1,80	1-2,40	25 (15-30)	60 (30-100)	80 (30-150)	180 (90-200)	220 (120-300)
P3	PMX5/PMX6-EB25	0,10-0,20	0,1-0,30	0,80-1,80	1-2,40	25 (15-30)	60 (30-100)	80 (30-150)	180 (90-200)	220 (120-300)
P4	PMX5/PMX6-EB25	0,10-0,20	0,1-0,30	0,80-1,80	1-2,40	20 (10-25)	50 (30-80)	60 (30-120)	120 (80-150)	180 (90-200)
P5	PMX5/PMX6-EB25	0,10-0,20	0,1-0,30	0,80-1,80	1-2,40	20 (10-25)	50 (30-80)	60 (30-120)	120 (80-150)	180 (90-200)
P6	PMX5/PMX6-EB25	0,10-0,20	0,1-0,30	0,80-1,80	1-2,40	20 (10-25)	50 (30-80)	60 (30-120)	120 (80-150)	180 (90-200)
P7	PMX5/PMX6-EB25	0,10-0,20	0,1-0,30	0,80-1,80	1-2,40	20 (10-25)	50 (30-80)	60 (30-120)	120 (80-150)	180 (90-200)
M1	PMX5/PMX6-EB25	0,08-0,15	0,10-0,20	0,8-1,20	1,0-2,0	-	25 (15-40)	35 (20-70)	-	-
K1	PMX5/PMX6-EB25	0,10-0,20	0,10-0,25	0,80-2,20	1-2,8	25 (15-30)	60 (40-100)	80 (30-150)	-	220 (120-300)
K2	PMX5/PMX6-EB25	0,10-0,20	0,10-0,25	0,80-1,80	1-2,40	-	25 (20-40)	40 (30-70)	-	80 (50-100)
K3	PMX5/PMX6-EB25	0,10-0,20	0,10-0,25	0,80-2,20	1-2,8	25 (15-30)	60 (40-100)	80 (30-150)	-	220 (120-300)
K4	PMX5/PMX6-EB25	0,10-0,20	0,10-0,25	0,80-2,20	1-2,8	25 (15-30)	45 (30-70)	70 (40-120)	100 (70-150)	150 (80-200)
K5	PMX5/PMX6-EB25	0,10-0,20	0,10-0,25	0,80-2,20	1-2,8	25 (15-30)	45 (30-70)	70 (40-120)	100 (70-150)	150 (80-200)
K6	PMX5/PMX6-EB25	0,10-0,20	0,10-0,25	0,80-1,80	1-2,40	-	60 (40-100)	80 (30-150)	-	220 (120-300)
K7	PMX5/PMX6-EB25	0,10-0,20	0,10-0,25	0,80-1,80	1-2,40	-	60 (40-100)	80 (30-150)	-	220 (120-300)
N1	PMX5/PMX6-EB25	0,10-0,20	0,10-0,30	0,80-2,20	1-2,8	50 (30-100)	-	-	-	-
N2	PMX5/PMX6-EB25	0,10-0,20	0,10-0,30	0,80-2,20	1-2,8	50 (30-100)	-	-	-	-
N3	PMX5/PMX6-EB25	0,10-0,20	0,10-0,30	0,80-2,20	1-2,8	50 (30-100)	-	-	-	-
N11	PMX5/PMX6-EB25	0,10-0,20	0,10-0,30	0,80-2,20	1-2,8	50 (30-100)	-	-	-	-
PM1	PMX5/PMX6-EB25	0,10-0,20	0,1-0,30	0,50-1,80	0,80-2	-	50 (30-80)	70 (40-100)	-	-
PM2	PMX5/PMX6-EB25	0,10-0,20	0,1-0,30	0,50-1,80	0,80-2	-	50 (30-80)	70 (40-100)	-	-
PM3	PMX5/PMX6-EB25	0,10-0,20	0,1-0,30	0,50-1,80	0,80-2	-	50 (30-80)	70 (40-100)	-	-

Cutting data – PM Plus...-EB45

SMG		a_p (Ø)		f		V_c				
		z=6	z=8	z=6	z=8	H15	CP20	RX2000	CF	RX1500
P1	PMX5/PMX6-EB45	0,10-0,20	0,1-0,30	0,30-0,90	0,40-1,20	25 (15-30)	60 (30-100)	80 (30-150)	180 (90-200)	220 (120-300)
P2	PMX5/PMX6-EB45	0,10-0,20	0,1-0,30	0,30-0,90	0,40-1,20	25 (15-30)	60 (30-100)	80 (30-150)	180 (90-200)	220 (120-300)
P3	PMX5/PMX6-EB45	0,10-0,20	0,1-0,30	0,30-0,90	0,40-1,20	25 (15-30)	60 (30-100)	80 (30-150)	180 (90-200)	220 (120-300)
P4	PMX5/PMX6-EB45	0,10-0,20	0,1-0,30	0,20-0,70	0,3-1	20 (10-25)	50 (30-80)	60 (30-120)	120 (80-150)	180 (90-200)
P5	PMX5/PMX6-EB45	0,10-0,20	0,1-0,30	0,20-0,70	0,3-1	20 (10-25)	50 (30-80)	60 (30-120)	120 (80-150)	180 (90-200)
P6	PMX5/PMX6-EB45	0,10-0,20	0,1-0,30	0,20-0,70	0,3-1	20 (10-25)	50 (30-80)	60 (30-120)	120 (80-150)	180 (90-200)
P7	PMX5/PMX6-EB45	0,10-0,20	0,1-0,30	0,20-0,70	0,3-1	20 (10-25)	50 (30-80)	60 (30-120)	120 (80-150)	180 (90-200)
P8	PMX5/PMX6-EB45	0,10-0,20	0,1-0,30	0,20-0,70	0,3-1	15 (10-20)	35 (20-60)	40 (20-80)	80 (60-120)	120 (80-180)
P11	PMX5/PMX6-EB45	0,10-0,20	0,1-0,30	0,20-0,70	0,3-1	15 (10-20)	35 (20-60)	40 (20-80)	80 (60-120)	120 (80-180)
M1	PMX5/PMX6-EB45	0,08-0,15	0,10-0,20	0,20-0,60	0,30-0,80	12 (9-15)	25 (15-40)	35 (20-70)	-	-
M2	PMX5/PMX6-EB45	0,08-0,15	0,10-0,20	0,20-0,60	0,30-0,80	-	25 (15-40)	35 (20-70)	-	-
M3	PMX5/PMX6-EB45	0,08-0,15	0,10-0,20	0,20-0,60	0,30-0,80	-	25 (15-40)	35 (20-70)	-	-
M4	PMX5/PMX6-EB45	0,08-0,15	0,10-0,20	0,20-0,60	0,30-0,80	-	20 (10-30)	25 (15-50)	-	-
M5	PMX5/PMX6-EB45	0,08-0,15	0,10-0,20	0,20-0,60	0,30-0,80	-	20 (10-30)	25 (15-50)	-	-
K1	PMX5/PMX6-EB45	0,10-0,20	0,10-0,25	0,30-0,90	0,40-1,20	25 (15-30)	60 (40-100)	80 (30-150)	-	220 (120-300)
K2	PMX5/PMX6-EB45	0,10-0,20	0,10-0,25	0,30-0,90	0,40-1,20	-	25 (20-40)	40 (30-70)	-	80 (50-100)
K3	PMX5/PMX6-EB45	0,10-0,20	0,10-0,25	0,30-0,90	0,40-1,20	25 (15-30)	60 (40-100)	80 (30-150)	-	220 (120-300)
K4	PMX5/PMX6-EB45	0,10-0,20	0,10-0,25	0,30-0,90	0,40-1,20	25 (15-30)	45 (30-70)	70 (40-120)	100 (70-150)	150 (80-200)
K5	PMX5/PMX6-EB45	0,10-0,20	0,10-0,25	0,30-0,90	0,40-1,20	25 (15-30)	45 (30-70)	70 (40-120)	100 (70-150)	150 (80-200)
K6	PMX5/PMX6-EB45	0,10-0,20	0,10-0,25	0,30-0,90	0,40-1,20	-	60 (40-100)	80 (30-150)	-	220 (120-300)
K7	PMX5/PMX6-EB45	0,10-0,20	0,10-0,25	0,30-0,90	0,40-1,20	-	60 (40-100)	80 (30-150)	-	220 (120-300)
N1	PMX5/PMX6-EB45	0,10-0,20	0,10-0,30	0,30-0,90	0,40-1,20	50 (30-100)	-	80 (30-150)	-	-
N2	PMX5/PMX6-EB45	0,10-0,20	0,10-0,30	0,30-0,90	0,40-1,20	50 (30-100)	-	80 (30-150)	-	-
N3	PMX5/PMX6-EB45	0,10-0,20	0,10-0,30	0,30-0,90	0,40-1,20	50 (30-100)	-	80 (30-150)	-	-
N11	PMX5/PMX6-EB45	0,10-0,20	0,10-0,30	0,30-0,90	0,40-1,20	50 (30-100)	-	80 (30-150)	-	-
S1	PMX5/PMX6-EB45	0,08-0,15	0,10-0,15	0,20-0,60	0,30-0,80	-	20 (10-25)	20 (10-25)	-	-
S2	PMX5/PMX6-EB45	0,08-0,15	0,10-0,15	0,20-0,60	0,30-0,80	-	20 (10-25)	20 (10-25)	-	-
S3	PMX5/PMX6-EB45	0,08-0,15	0,10-0,15	0,20-0,60	0,30-0,80	-	20 (10-25)	20 (10-25)	-	-
S11	PMX5/PMX6-EB45	0,08-0,15	0,10-0,15	0,20-0,60	0,30-0,80	20 (15-30)	30 (15-40)	40 (20-50)	-	-
S12	PMX5/PMX6-EB45	0,08-0,15	0,10-0,15	0,20-0,60	0,30-0,80	20 (15-30)	30 (15-40)	40 (20-50)	-	-
S13	PMX5/PMX6-EB45	0,08-0,15	0,10-0,15	0,20-0,60	0,30-0,80	20 (15-30)	30 (15-40)	40 (20-50)	-	-
H3	PMX5/PMX6-EB45	0,08-0,15	0,10-0,15	0,20-0,40	0,30-0,60	-	-	10 (8-15)	-	-
H5	PMX5/PMX6-EB45	0,08-0,15	0,10-0,15	0,20-0,40	0,30-0,60	-	-	10 (8-15)	-	-
H7	PMX5/PMX6-EB45	0,08-0,15	0,10-0,15	0,20-0,40	0,30-0,60	-	-	10 (8-15)	-	-
H8	PMX5/PMX6-EB45	0,08-0,15	0,10-0,15	0,20-0,40	0,30-0,60	-	-	10 (8-15)	-	-
H11	PMX5/PMX6-EB45	0,08-0,15	0,10-0,15	0,20-0,40	0,30-0,60	-	-	10 (8-15)	-	-
H12	PMX5/PMX6-EB45	0,08-0,15	0,10-0,15	0,20-0,40	0,30-0,60	-	-	10 (8-15)	-	-
H21	PMX5/PMX6-EB45	0,08-0,15	0,10-0,15	0,20-0,40	0,30-0,60	-	-	10 (8-15)	-	-
H31	PMX5/PMX6-EB45	0,08-0,15	0,10-0,15	0,20-0,40	0,30-0,60	-	-	10 (8-15)	-	-
PM1	PMX5/PMX6-EB45	0,10-0,20	0,1-0,30	0,30-0,90	0,40-1,20	-	50 (30-80)	70 (40-100)	-	-
PM2	PMX5/PMX6-EB45	0,10-0,20	0,1-0,30	0,30-0,90	0,40-1,20	-	50 (30-80)	70 (40-100)	-	-
PM3	PMX5/PMX6-EB45	0,10-0,20	0,1-0,30	0,30-0,90	0,40-1,20	-	50 (30-80)	70 (40-100)	-	-
TS1	PMX5/PMX6-EB45	0,10-0,15	0,1-0,20	0,30-0,90	0,40-1,20	20 (15-25)	-	40 (20-60)	-	-
TS2	PMX5/PMX6-EB45	0,10-0,15	0,1-0,20	0,30-0,90	0,40-1,20	20 (15-25)	-	40 (20-60)	-	-
TS3	PMX5/PMX6-EB45	0,10-0,15	0,1-0,20	0,30-0,90	0,40-1,20	20 (15-25)	-	40 (20-60)	-	-
TS4	PMX5/PMX6-EB45	0,10-0,15	0,1-0,20	0,30-0,90	0,40-1,20	20 (15-25)	-	40 (20-60)	-	-
TP1	PMX5/PMX6-EB45	0,10-0,15	0,1-0,20	0,30-0,90	0,40-1,20	20 (15-25)	-	40 (20-60)	-	-
TP2	PMX5/PMX6-EB45	0,10-0,15	0,1-0,20	0,30-0,90	0,40-1,20	20 (15-25)	-	40 (20-60)	-	-
TP3	PMX5/PMX6-EB45	0,10-0,15	0,1-0,20	0,30-0,90	0,40-1,20	20 (15-25)	-	40 (20-60)	-	-
TP4	PMX5/PMX6-EB45	0,10-0,15	0,1-0,20	0,30-0,90	0,40-1,20	20 (15-25)	-	40 (20-60)	-	-
GR1	PMX5/PMX6-EB45	0,10-0,30	0,1-0,40	0,30-0,90	0,40-1,20	40 (80-20)	-	60 (30-120)	-	-

SMG = Seco material group
a_p = mm
f = mm/rev
v_c= m/min
All cutting data are start values

No waiting for quotations – Short delivery time

Custom Design is also available for Precimaster Plus reamers and tool holders.
You can now quote for your own intermediate Ø reamer and tailor made Precimaster Plus tool holder using the Seco Custom Design software.
Easy to use concept: Just indicate component min/max Ø or use ISO tolerance system available in the software.
Precimaster Plus head designation is created automatically.
Custom Design gives you a number of advantages:

- No waiting for quotations! Price and delivery time available instantly!
- Directly visualises your needs. No risk of misunderstandings
- Short delivery time

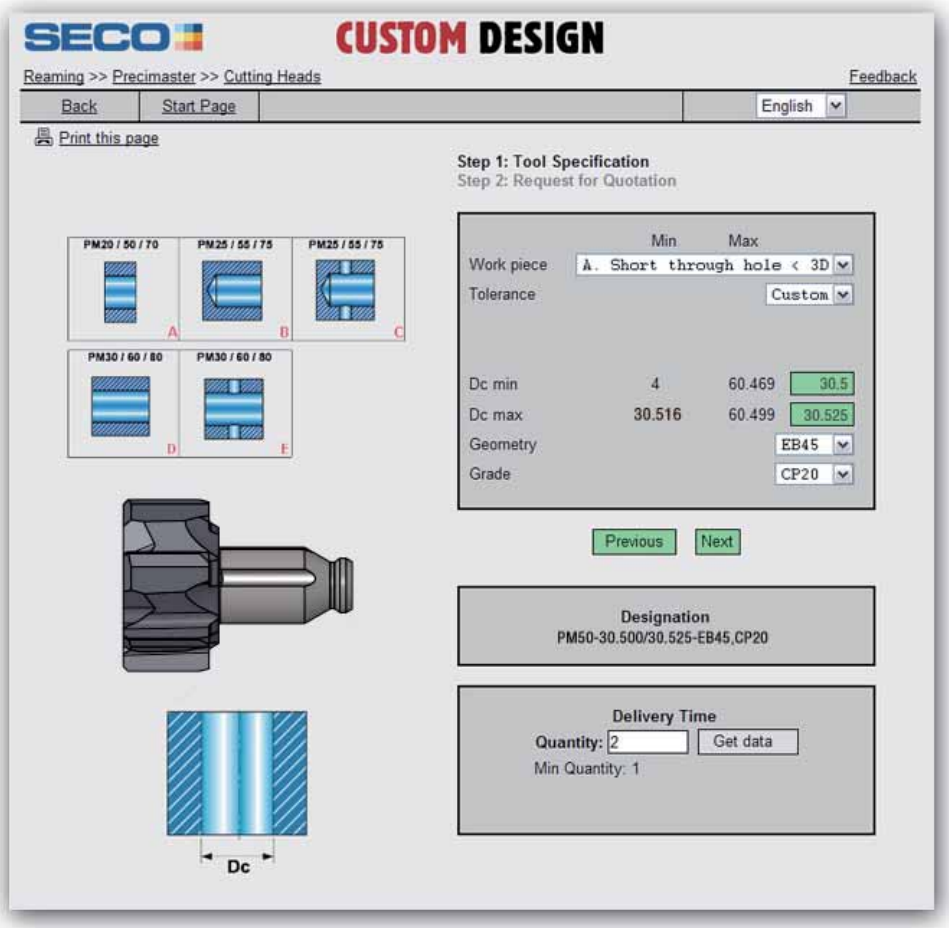

Please contact your local Seco representative for more information.

Troubleshooting

Poor surface finish

- Check material allowance.
- Improve coolant conditions (outlet type, pressure, quality).
- Reduce feed rate.

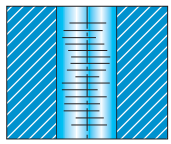

Too large diameter

- Improve centring (part/tool).

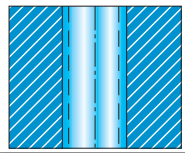

Retraction marks

- Improve coolant conditions (outlet type, pressure, quality).
- Improve centring (part/tool).
- Reduce feed-out speed.

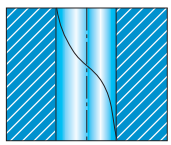

Facets

- Improve centring (part/tool).
- Check material allowance.

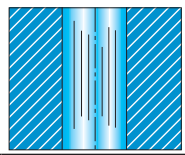

Tapered entry

- Reduce feed rate.
- Improve centring (part/tool).
- Reduce radial run-out.

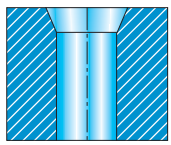

Off centre/Ovality

- Improve clamping (workpiece deformation).
- Check material allowance.
- Improve centring (part/tool).

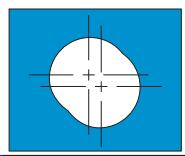

Deformed hole

- Improve clamping (workpiece deformation).

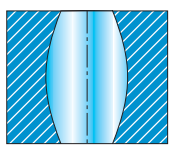

Tapered hole

- Improve centring (part/tool).

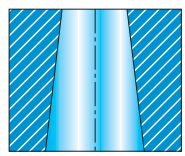

Regrinding instructions for Precimaster Plus

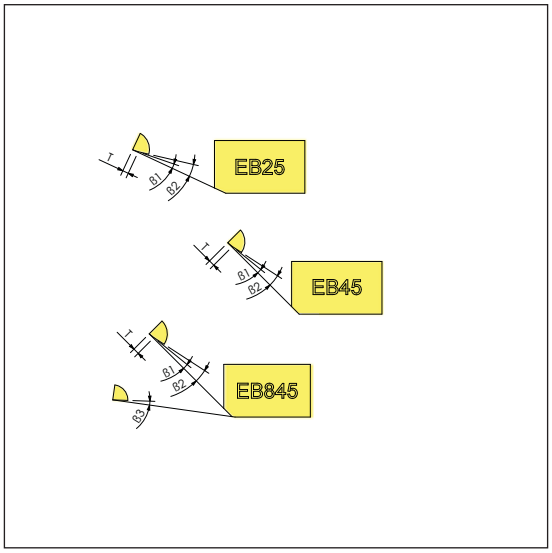

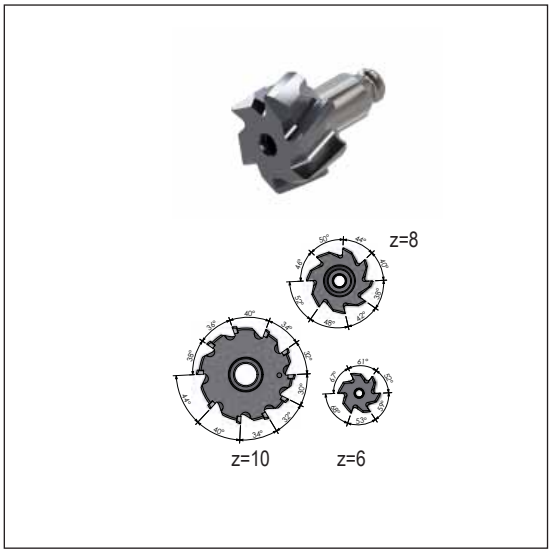

∅ Precimaster Plus	β_1	β_2	β_3	t
10,00–14,499	8°	20°	8°	0,20
14,500–21,499	8°	20°	8°	0,20
21,500–32,499	8°	20°	8°	0,25
32,500–60,499	8°	20°	8°	0,30

Specifications

Diamond grinding wheel
Grain size:
D6 – For first clearance angle (β1–β3)
D64 – For second clearance angle (β2)

Important:

Regrinding reduces reamer diameter
Recoating may produce oversized diameter
Recoating may cause driving pin loosening
Max run-out on lead chamfers 10 µm



Nanofix™	∅ Range	Reaming depth	Hole tolerance	Intermediate diameters	Surface finish
	2,97-12,05 mm	10-15 x D	IT 7	yes, available through Custom Design	R_a 0,8–1,2 µm

Nanofix™ is a Seco solid carbide reamer programme dedicated for small ∅ from 2,97 to 12,05 mm.
Design includes a unique patented Quick-fit clamping system that will allow it to hold the entire diameter range with only 2 tool holders .
Tool holders have internal coolant with a simple adjustable system so the outlet style can be set for either through or blind bore, depending on application.

Quick-fit clamping

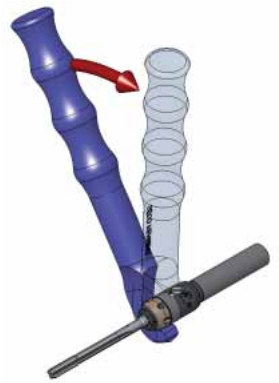

Quick and easy tool change.
Accurate repositioning in run-out and length.

2 Quick-fit sizes to cover the complete diameter range



Quick-fit ∅ 10 mm for
∅ 6,051-12,050 mm.



Quick-fit ∅ 6 mm for
∅ 2,97 -6,050 mm.

Same tool for blind or through hole application



through



blind

Turn coolant style adjusting screw by 1/4 of a revolution to change coolant outlet from through to blind and vice-versa.

Code key - Reamers

Reamer type	Hole diameter and tolerance	Lead geometry	Grade
NF06	4H7	EB45	RX2000



Code key - Intermediate diameter reamers

Reamer type	Hole diameter and tolerance	Lead geometry	Grade
NF10	10,1G7	EB845	RX2000

Code key - Shanks

Shank type	Working length	Cylindrical shank diameter	Neutral	Cyl. shank DIN 1835
NFQF06	03300	12	N	1



Run-out

Rotating tool

Max. run-out recommended: 5 µm.
Precision holder is recommended : Hydraulic chuck, D-type collet chuck or 5672 collet chuck.

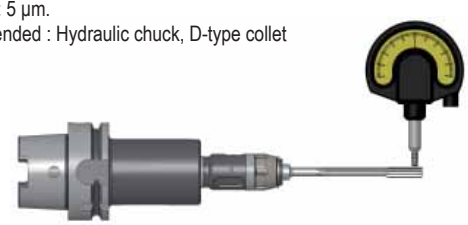

Note: due to coolant outlet adjustment sealing o-ring, the use of a Shrinkfit holder is not recommended.

Static tool

Use a Seco floating holder, see page 469-473



Floating holders allow reamer self-centering in pre-bore.

Coolant requirements

To reach maximum tool life and hole quality, the following coolant requirements should be observed.

Coolant through the tool is recommended.
External coolant supply can be used with cutting condition reduced by 75%.

Soluble oil with 40% minimum mineral oil.
Neat oil recommended for stainless steel.

Concentration minimum 6–8%.
Filtration 30–50 µm.
Volume min 0,5 l/min/mm in tool diameter (Ex: Reamer ∅10, min volume is 5 l/min).

Diameter measurement

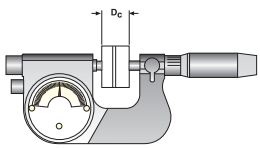

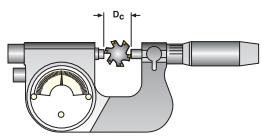

Gauge clock micrometer prior to ∅ measurement.

Important!
Nanofix reamers have differential pitch on teeth.
When measuring the diameter, make sure that you have 2 teeth 180° opposite.

Use clock micrometer and measuring blocks for gauging.

Lead geometries and grades – Applications

Lead geometry - EB45

Chip control +++
Surface Finish + (R_a 0,8 - 1,2 µm)
Versatile

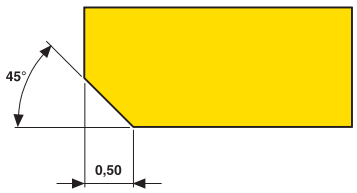

Lead geometry - EB845

Chip control ++
Surface finish+++ (R_a 0,2 - 0,8 µm)

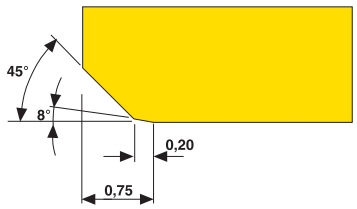

Lead geometry - EB25

Feed performance +++
Surface finish ++ (R_a 0,4 - 0,8 µm)
Chip control +

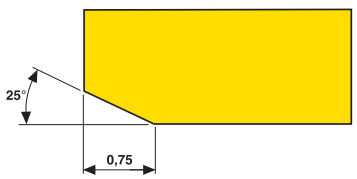

Grades

	**H15**	**Uncoated** A tough micrograin grade for all materials. Suitable for fine-reaming operations due to edge sharpness.
	**RX2000**	**Coated** High performance coated grade suitable for all materials.

Reamer for blind and through holes ∅ 2,97 - 6,01



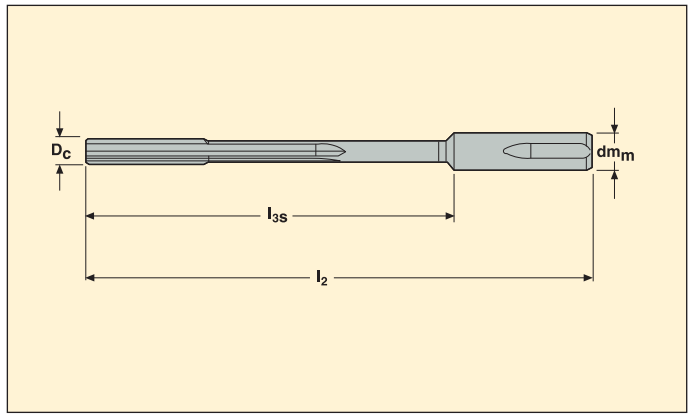

D_c	Hole dia ISO (mm)	Hole dia min/max (mm)	Hole dia min/max (inch)	Seco drill size (mm)	Part No.	Dimensions in mm					Geometries			Grades	
							l_{3s}	dm_m	l_2	Body size	EB45	EB845	EB25	RX2000	H15
2,97	2,97 H7	2,970/2,980	.1169/ .1173	2,8-2,9	**NF06-2.97 H7-EB..**	4	40	6	60	NFQF06...	■	□	□	■	□
2,98	2,98 H7	2,980/2,990	.1173/ .1177	2,8-2,9	**NF06-2.98 H7-EB..**	4	40	6	60	NFQF06...	■	□	□	■	□
2,99	2,99 H7/3 K7	2,990/3,000	.1177/ .1181	2,8-2,9	**NF06-2.99 H7-EB..**	4	40	6	60	NFQF06...	■	□	□	■	□
3,00	3 H7	3,000/3,010	.1181/ .1185	2,8-2,9	**NF06-3 H7-EB..**	4	40	6	60	NFQF06...	■	□	□	■	□
3,01	3,01 H7	3,010/3,022	.1185/ .1190	2,8-2,9	**NF06-3.01 H7-EB..**	4	40	6	60	NFQF06...	■	□	□	■	□
3,02	3,02 H7/3 D7	3,020/3,032	.1189/ .1194	2,9	**NF06-3.02 H7-EB..**	4	40	6	60	NFQF06...	■	□	□	■	□
3,03	3,03 H7	3,030/3,042	.1193/ .1198	2,9	**NF06-3.03 H7-EB..**	4	40	6	60	NFQF06...	■	□	□	■	□
3,04	3,04 H7/3D10	3,040/3,052	.1197/ .1202	2,9	**NF06-3.04 H7-EB..**	4	40	6	60	NFQF06...	■	□	□	■	□
3,05	3,05 H7	3,050/3,062	.1201/ .1206	2,9	**NF06-3.05 H7-EB..**	4	40	6	60	NFQF06...	■	□	□	■	□
3,167	3,167 H7	3,167/3,179	.1247/ .1252	3	**NF06-3.167 H7-EB..**	4	60	6	80	NFQF06...	■	□	□	■	□
3,175	3,175 H7	3,187/3,175	.1255/ .1250	3	**NF06-3.175 H7-EB...**	4	60	6	80	NFQF06...	■	□	□	■	□
3,49	3,49 H7	3,490/3,502	.1374/ .1379	3,3-3,4	**NF06-3.49 H7-EB..**	4	60	6	80	NFQF06...	■	□	□	■	□
3,50	3,5 H7	3,500/3,512	.1378/ .1383	3,3-3,4	**NF06-3.5 H7-EB..**	4	60	6	80	NFQF06...	■	□	□	■	□
3,51	3,51 H7	3,510/3,522	.1382/ .1387	3,3-3,4	**NF06-3.51 H7-EB..**	4	60	6	80	NFQF06...	■	□	□	■	□
3,52	3,52 H7	3,520/3,532	.1386/ .1391	3,3-3,4	**NF06-3.52 H7-EB..**	4	60	6	80	NFQF06...	■	□	□	■	□
3,97	3,97 H7	3,970/3,982	.1563/ .1568	3,8-3,9	**NF06-3.97 H7-EB..**	4	60	6	80	NFQF06...	■	□	□	■	□
3,98	3,98 H7/4 P7	3,980/3,992	.1567/ .1572	3,8-3,9	**NF06-3.98 H7-EB..**	4	60	6	80	NFQF06...	■	□	□	■	□
3,99	3,99 H7/4 K8	3,990/4,002	.1571/ .1576	3,8-3,9	**NF06-3.99 H7-EB..**	4	60	6	80	NFQF06...	■	□	□	■	□
4,00	4 H7	4,000/4,012	.1575/ .1580	3,8-3,9	**NF06-4 H7-EB..**	4	60	6	80	NFQF06...	■	□	□	■	□
4,01	4,01 H7/4 F7	4,010/4,022	.1579/ .1583	3,8-3,9	**NF06-4.01 H7-EB..**	4	60	6	80	NFQF06...	■	□	□	■	□
4,02	4,02 H7/4 E7	4,020/4,032	.1583/ .1587	3,9	**NF06-4.02 H7-EB..**	4	60	6	80	NFQF06...	■	□	□	■	□
4,03	4,03 H7/4 D7	4,030/4,042	.1587/ .1591	3,9	**NF06-4.03 H7-EB..**	4	60	6	80	NFQF06...	■	□	□	■	□
4,04	4,04 H7	4,040/4,052	.1591/ .1595	3,9	**NF06-4.04 H7-EB..**	4	60	6	80	NFQF06...	■	□	□	■	□
4,05	4,05 H7	4,050/4,062	.1594/ .1599	3,9	**NF06-4.05 H7-EB..**	4	60	6	80	NFQF06...	■	□	□	■	□
4,50	4,5 H7	4,500/4,512	.1772/ .1776	4,3-4,4	**NF06-4.5 H7-EB..**	4	60	6	80	NFQF06...	■	□	□	■	□
4,75	4,75 H7	4,762/4,750	.1875/ .1870	4,5	**NF06-4.750 H7-EB..**	4	60	6	80	NFQF06...	■	□	□	■	□
4,762	4,762 H7	4,774/4,762	.1880/ .1875	4,5	**NF06-4.762 H7-EB..**	4	60	6	80	NFQF06...	■	□	□	■	□
4,97	4,97 H7	4,970/4,982	.1957/ .1961	4,8-4,9	**NF06-4.97 H7-EB..**	4	60	6	80	NFQF06...	■	□	□	■	□
4,98	4,98 H7/5 P7	4,980/4,992	.1961/ .1965	4,8-4,9	**NF06-4.98 H7-EB..**	4	60	6	80	NFQF06...	■	□	□	■	□
4,99	4,99 H7/5 K8	4,990/5,002	.1965/ .1969	4,8-4,9	**NF06-4.99 H7-EB..**	4	60	6	80	NFQF06...	■	□	□	■	□
5,00	5 H7	5,000/5,012	.1969/ .1973	4,8-4,9	**NF06-5 H7-EB..**	4	60	6	80	NFQF06...	■	□	□	■	□
5,01	5,01 H7/5 F7	5,010/5,022	.1972/ .1977	4,8-4,9	**NF06-5.01 H7-EB..**	4	60	6	80	NFQF06...	■	□	□	■	□
5,02	5,02 H7/5 E7	5,020/5,032	.1976/ .1981	4,9	**NF06-5.02 H7-EB..**	4	60	6	80	NFQF06...	■	□	□	■	□
5,03	5,03 H7/5 D7	5,030/5,042	.1980/ .1985	4,9	**NF06-5.03 H7-EB..**	4	60	6	80	NFQF06...	■	□	□	■	□
5,04	5,04 H7	5,040/5,052	.1984/ .1989	4,9	**NF06-5.04 H7-EB..**	4	60	6	80	NFQF06...	■	□	□	■	□
5,05	5,05 H7	5,050/5,062	.1988/ .1993	4,9	**NF06-5.05 H7-EB..**	4	60	6	80	NFQF06...	■	□	□	■	□
5,50	5,5 H7	5,500/5,512	.2165/ .2170	5,3-5,4	**NF06-5.5 H7-EB..**	4	60	6	80	NFQF06...	■	□	□	■	□
5,97	5,97 H7	5,970/5,982	.2350/ .2355	5,8-5,9	**NF06-5.97 H7-EB..**	4	60	6	80	NFQF06...	■	□	□	■	□
5,98	5,98 H7/6 P7	5,980/5,992	.2354/ .2359	5,8-5,9	**NF06-5.98 H7-EB..**	4	60	6	80	NFQF06...	■	□	□	■	□
5,99	5,99 H7/6 K8	5,990/6,002	.2358/ .2363	5,8-5,9	**NF06-5.99 H7-EB..**	4	60	6	80	NFQF06...	■	□	□	■	□
6,00	6 H7	6,000/6,012	.2362/ .2367	5,8-5,9	**NF06-6 H7-EB..**	4	60	6	80	NFQF06...	■	□	□	■	□
6,01	6,01 H7/6 F7	6,010/6,025	.2366/ .2372	5,8-5,9	**NF06-6.01 H7-EB..**	4	60	6	80	NFQF06...	■	□	□	■	□

■ **Stock standard, □ = Non stock standard. Subject to change refer to current price- and stock-list**

Note: When ordering Nanofix reamers for intermediate diameters, please state diameter and tolerance of hole to be reamed.

Reamer for blind and through holes ∅ 6,02 - 9,97



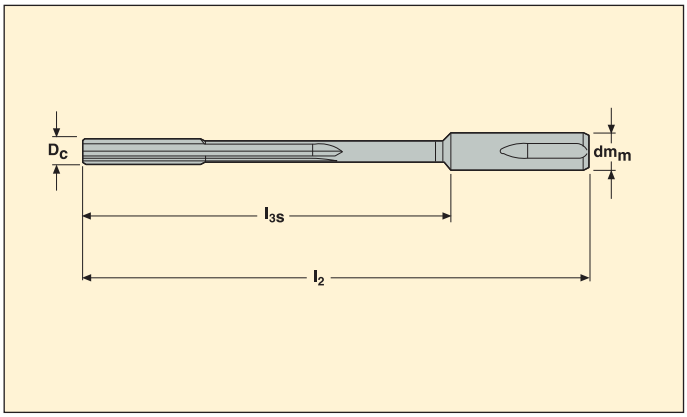

D_c	Hole dia ISO (mm)	Hole dia min/max (mm)	Hole dia min/max (inch)	Seco drill size (mm)	Part No.	Dimensions in mm					Geometries			Grades	
							l_{3s}	dm_m	l_2	Body size	EB45	EB845	EB25	RX2000	H15
6,02	6,02 H7/6 E7	6,020/6,035	.2370/ .2376	5,9	**NF06-6.02 H7-EB..**	4	60	6	80	NFQF06...	■	□	□	■	□
6,03	6,03 H7/6 D7	6,030/6,045	.2374/ .2380	5,9	**NF06-6.03 H7-EB..**	4	60	6	80	NFQF06...	■	□	□	■	□
6,04	6,04 H7	6,040/6,055	.2378/ .2384	5,9	**NF06-6.04 H7-EB..**	4	60	6	80	NFQF06...	■	□	□	■	□
6,05	6,05 H7	6,050/6,065	.2382/ .2388	5,9	**NF06-6.05 H7-EB..**	4	60	6	80	NFQF06...	■	□	□	■	□
6,334	6,334 H7	6,334/6,349	.2494/ .2500	6,1-6,2	**NF10-6.334 H7-EB..**	6	83	10	115	NFQF10...	■	□	□	■	□
6,35	6,35 H7	6,35/6,365	.2500/ .2506	6,2	**NF10-6.350 H7-EB..**	6	83	10	115	NFQF10...	■	□	□	■	□
6,375	6,375 H7	6,375/6,39	.2510/ .2516	6,2	**NF10-6.375 H7-EB..**	6	83	10	115	NFQF10...	■	□	□	■	□
6,50	6,5 H7	6,500/6,515	.2559/ .2565	6,3-6,35-6,4	**NF10-6.5 H7-EB..**	6	83	10	115	NFQF10...	■	□	□	■	□
6,97	6,97 H7	6,970/6,985	.2744/ .2750	6,8-6,9	**NF10-6.97 H7-EB..**	6	83	10	115	NFQF10...	■	□	□	■	□
6,98	6,98 H7	6,980/6,995	.2748/ .2754	6,8-6,9	**NF10-6.98 H7-EB..**	6	83	10	115	NFQF10...	■	□	□	■	□
6,99	6,99 H7/7 K7	6,990/7,005	.2752/ .2758	6,8-6,9	**NF10-6.99 H7-EB..**	6	83	10	115	NFQF10...	■	□	□	■	□
7,00	7 H7	7,000/7,015	.2756/ .2762	6,8-6,9	**NF10-7 H7-EB..**	6	83	10	115	NFQF10...	■	□	□	■	□
7,01	7,01 H7	7,010/7,025	.2760/ .2766	6,8-6,9	**NF10-7.01 H7-EB..**	6	83	10	115	NFQF10...	■	□	□	■	□
7,02	7,02 H7	7,020/7,035	.2764/ .2770	6,9	**NF10-7.02 H7-EB..**	6	83	10	115	NFQF10...	■	□	□	■	□
7,03	7,03 H7/7 E8	7,030/7,045	.2768/ .2774	6,9	**NF10-7.03 H7-EB..**	6	83	10	115	NFQF10...	■	□	□	■	□
7,04	7,04 H7/7 D7	7,040/7,055	.2772/ .2778	6,9	**NF10-7.04 H7-EB..**	6	83	10	115	NFQF10...	■	□	□	■	□
7,05	7,05 H7	7,050/7,065	.2776/ .2781	6,9	**NF10-7.05 H7-EB..**	6	83	10	115	NFQF10...	■	□	□	■	□
7,50	7,5 H7	7,500/7,515	.2953/ .2959	7,3-7,4	**NF10-7.5 H7-EB..**	6	83	10	115	NFQF10...	■	□	□	■	□
7,937	7,937 H7	7,937/7,952	.3125/ .3131	7,8	**NF10-7.9375 H7-EB..**	6	83	10	115	NFQF10...	■	□	□	■	□
7,97	7,97 H7	7,970/7,985	.3138/ .3144	7,8-7,9	**NF10-7.97 H7-EB..**	6	83	10	115	NFQF10...	■	□	□	■	□
7,98	7,98 H7	7,980/7,995	.3142/ .3148	7,8-7,9	**NF10-7.98 H7-EB..**	6	83	10	115	NFQF10...	■	□	□	■	□
7,99	7,99 H7/8 K7	7,990/8,005	.3146/ .3152	7,8-7,9	**NF10-7.99 H7-EB..**	6	83	10	115	NFQF10...	■	□	□	■	□
8,00	8 H7	8,000/8,015	.3150/ .3156	7,8-7,9	**NF10-8 H7-EB..**	6	83	10	115	NFQF10...	■	□	□	■	□
8,01	8,01 H7	8,010/8,025	.3154/ .3159	7,8-7,9	**NF10-8.01 H7-EB..**	6	83	10	115	NFQF10...	■	□	□	■	□
8,02	8,02 H7	8,020/8,035	.3157/ .3163	7,9	**NF10-8.02 H7-EB..**	6	83	10	115	NFQF10...	■	□	□	■	□
8,03	8,03 H7/8 E8	8,030/8,045	.3161/ .3167	7,9	**NF10-8.03H7-EB..**	6	83	10	115	NFQF10...	■	□	□	■	□
8,04	8,04 H7/8 D7	8,040/8,055	.3165/ .3171	7,9	**NF10-8.04 H7-EB..**	6	83	10	115	NFQF10...	■	□	□	■	□
8,05	8,05 H7	8,050/8,065	.3169/ .3175	7,9	**NF10-8.05 H7-EB..**	6	83	10	115	NFQF10...	■	□	□	■	□
8,50	8,5 H7	8,500/8,515	.3346/ .3352	8,3-8,338-8,4	**NF10-8.5 H7-EB..**	6	93	10	125	NFQF10...	■	□	□	■	□
8,97	8,97 H7	8,970/8,985	.3531/ .3537	8,8-8,9	**NF10-8.97 H7-EB..**	6	93	10	125	NFQF10...	■	□	□	■	□
8,98	8,98 H7	8,980/8,995	.3535/ .3541	8,8-8,9	**NF10-8.98 H7-EB..**	6	93	10	125	NFQF10...	■	□	□	■	□
8,99	8,99 H7/9 K7	8,990/9,005	.3539/ .3545	8,8-8,9	**NF10-8.99 H7-EB..**	6	93	10	125	NFQF10...	■	□	□	■	□
9,00	9 H7	9,000/9,015	.3543/ .3549	8,8-8,9	**NF10-9 H7-EB..**	6	93	10	125	NFQF10...	■	□	□	■	□
9,01	9,01 H7	9,010/9,025	.3547/ .3553	8,8-8,9	**NF10-9.01 H7-EB..**	6	93	10	125	NFQF10...	■	□	□	■	□
9,02	9,02 H7	9,020/9,035	.3551/ .3557	8,9	**NF10-9.02 H7-EB..**	6	93	10	125	NFQF10...	■	□	□	■	□
9,03	9,03 H7/9 E8	9,030/9,045	.3555/ .3561	8,9	**NF10-9.03 H7-EB..**	6	93	10	125	NFQF10...	■	□	□	■	□
9,04	9,04 H7/9 D7	9,040/9,055	.3559/ .3565	8,9	**NF10-9.04 H7-EB..**	6	93	10	125	NFQF10...	■	□	□	■	□
9,05	9,05 H7	9,050/9,065	.3563/ .3569	8,9	**NF10-9.05 H7-EB..**	6	93	10	125	NFQF10...	■	□	□	■	□
9,50	9,5 H7	9,500/9,515	.3740/ .3746	9,3-9,4	**NF10-9.5 H7-EB..**	6	93	10	125	NFQF10...	■	□	□	■	□
9,512	9,512 H7	9,512/9,527	.3745/ .3751	9,3-9,4	**NF10-9.5123 H7-EB..**	6	93	10	125	NFQF10...	■	□	□	■	□
9,525	9,525 H7	9,525/9,54	.3750/ .3756	9,8-9,9	**NF10-9.525 H7-EB..**	6	93	10	125	NFQF10...	■	□	□	■	□
9,97	9,97 H7	9,970/9,985	.3925/ .3931	9,8-9,9	**NF10-9.97 H7-EB..**	6	93	10	125	NFQF10...	■	□	□	■	□

■ **Stock standard, □ = Non stock standard. Subject to change refer to current price- and stock-list**

Note: When ordering Nanofix reamers for intermediate diameters, please state diameter and tolerance of hole to be reamed.

Reamer for blind and through holes ∅ 9,98 - 12,05



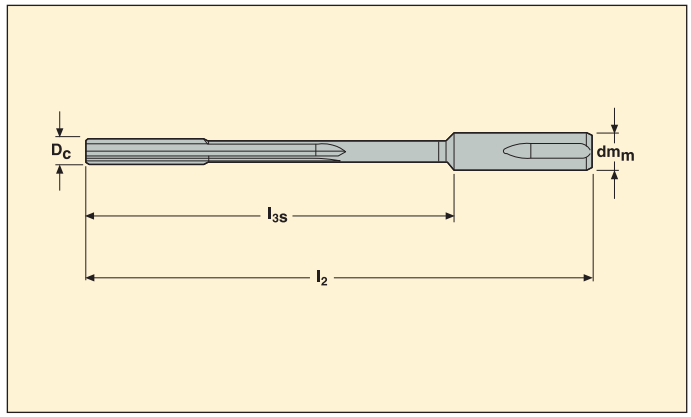

D_c	Hole dia ISO (mm)	Hole dia min/max (mm)	Hole dia min/max (inch)	Seco drill size (mm)	Part No.	Dimensions in mm					Geometries			Grades	
							l_{3s}	dm_m	l_2	Body size	EB45	EB845	EB25	RX2000	H15
9,98	9,98 H7	9,980/9,995	.3929/ .3935	9,8-9,9	**NF10-9.98 H7-EB..**	6	93	10	125	NFQF10…	■	□	□	■	□
9,99	9,99 H7/10 K7	9,990/10,005	.3933/ .3939	9,8-9,9	**NF10-9.99 H7-EB..**	6	93	10	125	NFQF10…	■	□	□	■	□
10,00	10 H7	10,000/10,015	.3937/ .3943	9,8-9,9	**NF10-10 H7-EB..**	6	93	10	125	NFQF10…	■	□	□	■	□
10,01	10,01 H7	10,010/10,028	.3941/ .3948	9,8-9,9	**NF10-10.01 H7-EB..**	6	93	10	125	NFQF10…	■	□	□	■	□
10,02	10,02 H7	10,020/10,038	.3945/ .3952	9,8-9,9	**NF10-10.02 H7-EB..**	6	93	10	125	NFQF10…	■	□	□	■	□
10,03	10,03 H7/10 E8	10,030/10,048	.3949/ .3956	9,9	**NF10-10.03 H7-EB..**	6	93	10	125	NFQF10…	■	□	□	■	□
10,04	10,04 H7/10 D7	10,040/10,058	.3953/ .3960	9,9	**NF10-10.04 H7-EB..**	6	93	10	125	NFQF10…	■	□	□	■	□
10,05	10,05 H7	10,050/10,068	.3957/ .3964	9,9	**NF10-10.05 H7-EB..**	6	93	10	125	NFQF10…	■	□	□	■	□
10,50	10,5 H7	10,500/10,518	.4134/ .4141	10,319-10,4	**NF10-10.5 H7-EB..**	6	114	10	145	NFQF10…	■	□	□	■	□
10,97	10,97 H7	10,970/10,988	.4319/ .4326	10,8	**NF10-10.97 H7-EB..**	6	114	10	145	NFQF10…	■	□	□	■	□
10,98	10,98 H7	10,980/10,998	.4323/ .4330	10,8	**NF10-10.98 H7-EB..**	6	114	10	145	NFQF10…	■	□	□	■	□
10,99	10,99 H7	10,990/11,008	.4327/ .4334	10,8	**NF10-10.99 H7-EB..**	6	114	10	145	NFQF10…	■	□	□	■	□
11,00	11 H7	11,000/11,018	.4331/ .4338	10,8	**NF10-11 H7-EB..**	6	114	10	145	NFQF10…	■	□	□	■	□
11,01	11,01 H7	11,010/11,028	.4335/ .4342	10,8	**NF10-11.01 H7-EB..**	6	114	10	145	NFQF10…	■	□	□	■	□
11,02	11,02 H7/11 F8	11,020/11,038	.4339/ .4346	10,8	**NF10-11.02 H7-EB..**	6	114	10	145	NFQF10…	■	□	□	■	□
11,03	11,03 H7	11,030/11,048	.4343/ .4350	10,8	**NF10-11.03 H7-EB..**	6	114	10	145	NFQF10…	■	□	□	■	□
11,04	11,04 H7/11 E7	11,040/11,058	.4346/ .4354	10,8	**NF10-11.04 H7-EB..**	6	114	10	145	NFQF10…	■	□	□	■	□
11,05	11,05 H7/11 D7	11,050/11,068	.4350/ .4357	10,8	**NF10-11.05 H7-EB..**	6	114	10	145	NFQF10…	■	□	□	■	□
11,112	11,112 H7	11,112/11,130	.4375/ .4382	10,9-11	**NF10-11.112 H7-EB..**	6	114	10	145	NFQF10…	■	□	□	■	□
11,50	11,5 H7	11,500/11,518	.4528/ .4535	11,3	**NF10-11.5 H7-EB..**	6	114	10	145	NFQF10…	■	□	□	■	□
11,97	11,97 H7	11,970/11,988	.4713/ .4720	11,8	**NF10-11.97 H7-EB..**	6	114	10	145	NFQF10…	■	□	□	■	□
11,98	11,98 H7	11,980/11,998	.4717/ .4724	11,8	**NF10-11.98 H7-EB..**	6	114	10	145	NFQF10…	■	□	□	■	□
11,99	11,99 H7	11,990/12,008	.4720/ .4728	11,8	**NF10-11.99 H7-EB..**	6	114	10	145	NFQF10…	■	□	□	■	□
12,00	12 H7	12,000/12,018	.4724/ .4731	11,8	**NF10-12 H7-EB..**	6	114	10	145	NFQF10…	■	□	□	■	□
12,01	12,01 H7	12,010/12,028	.4728/ .4735	11,8	**NF10-12.01 H7-EB..**	6	114	10	145	NFQF10…	■	□	□	■	□
12,02	12,02 H7/12 F8	12,020/12,038	.4732/ .4739	11,8-11,906	**NF10-12.02 H7-EB..**	6	114	10	145	NFQF10…	■	□	□	■	□
12,03	12,03 H7	12,030/12,048	.4736/ .4743	11,8-11,906	**NF10-12.03 H7-EB..**	6	114	10	145	NFQF10…	■	□	□	■	□
12,04	12,04 H7/12 E7	12,040/12,058	.4740/ .4747	11,8-11,906	**NF10-12.04 H7-EB..**	6	114	10	145	NFQF10…	■	□	□	■	□
12,05	12,05 H7/12 D7	12,050/12,068	.4744/ .4751	11,8-11,906	**NF10-12.05 H7-EB..**	6	114	10	145	NFQF10…	■	□	□	■	□

■ **Stock standard, □ = Non stock standard. Subject to change refer to current price- and stock-list**

Note: When ordering Nanofix reamers for intermediate diameters, please state diameter and tolerance of hole to be reamed.

Intermediate diameter



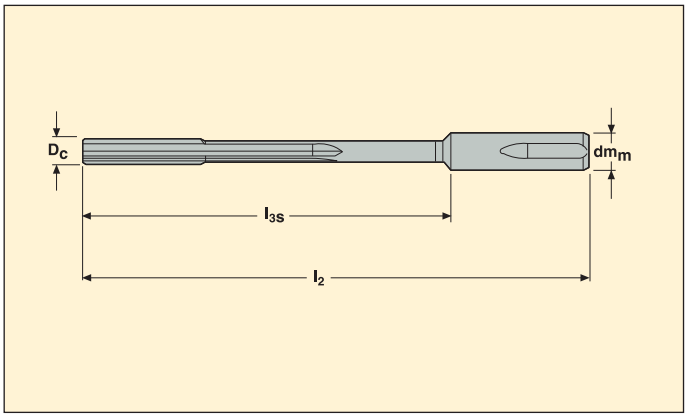

D_c	Part No.	Dimensions in mm					Geometries			Grades	
			l_{3s}	dm_m	l_2	Body size	EB45	EB845	EB25	RX2000	H15
2,970-3,050	**NF06-XX-XXX-XXXX**	4	40	6	60	NFQF06...	☐	☐	☐	☐	☐
3,051-5,050	**NF06-XX-XXX-XXXX**	4	60	6	80	NFQF06...	☐	☐	☐	☐	☐
5,051-6,050	**NF06-XX-XXX-XXXX**	4	61	6	80	NFQF06...	☐	☐	☐	☐	☐
6,051-8,050	**NF10-XX-XXX-XXXX**	6	83	10	115	NFQF10...	☐	☐	☐	☐	☐
8,051-10,050	**NF10-XX-XXX-XXXX**	6	93	10	125	NFQF10...	☐	☐	☐	☐	☐
10,051-12,050	**NF10-XX-XXX-XXXX**	6	114	10	145	NFQF10...	☐	☐	☐	☐	☐

☐ **= Non stock standard. Subject to change refer to current price- and stock-list**

Note: When ordering Nanofix reamers for intermediate diameters, please state diameter and tolerance of hole to be reamed.

Ordering example: NF10-10,187/10,213-EB845, RX2000.

Reamer for blind and through holes ∅ 2,97 - 6,01 - short version



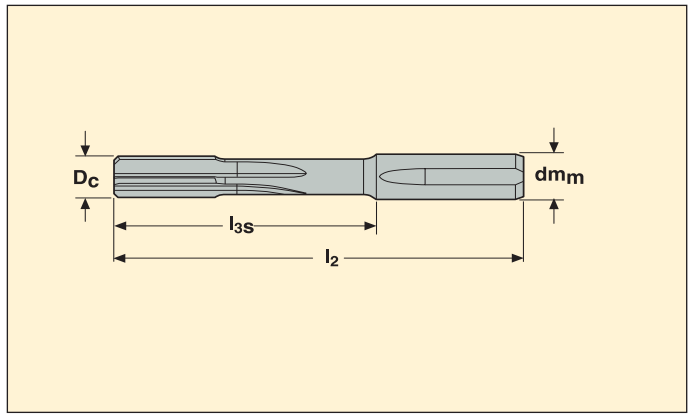

D_c	Hole dia ISO (mm)	Hole dia min/max (mm)	Hole dia min/max (inch)	Seco drill size (mm)	Part No.	Dimensions in mm					Geometries			Grades	
							l_{3s}	dm_m	l_2	Body size	EB45	EB845	EB25	RX2000	H15
2,97	2,97 H7	2,970/2,980	.1169/ .1173	2,8-2,9	**NS06-2.97 H7-EB...**	4	25	6	45	NFQF06...	☐	☐	☐	☐	☐
2,98	2,98 H7	2,980/2,990	.1173/ .1177	2,8-2,9	**NS06-2.98 H7-EB...**	4	25	6	45	NFQF06...	☐	☐	☐	☐	☐
2,99	2,99 H7/3 K7	2,990/3,000	.1177/ .1181	2,8-2,9	**NS06-2.99 H7-EB...**	4	25	6	45	NFQF06...	☐	☐	☐	☐	☐
3,00	3 H7	3,000/3,010	.1181/ .1185	2,8-2,9	**NS06-3 H7-EB...**	4	25	6	45	NFQF06...	☐	☐	☐	☐	☐
3,01	3,01 H7	3,010/3,022	.1185/ .1190	2,8-2,9	**NS06-3.01 H7-EB...**	4	25	6	45	NFQF06...	☐	☐	☐	☐	☐
3,02	3,02 H7/3 D7	3,020/3,032	.1189/ .1194	2,9	**NS06-3.02 H7-EB...**	4	25	6	45	NFQF06...	☐	☐	☐	☐	☐
3,03	3,03 H7	3,030/3,042	.1193/ .1198	2,9	**NS06-3.03 H7-EB...**	4	25	6	45	NFQF06...	☐	☐	☐	☐	☐
3,04	3,04 H7/3D10	3,040/3,052	.1197/ .1202	2,9	**NS06-3.04 H7-EB...**	4	25	6	45	NFQF06...	☐	☐	☐	☐	☐
3,05	3,05 H7	3,050/3,062	.1201/ .1206	2,9	**NS06-3.05 H7-EB...**	4	25	6	45	NFQF06...	☐	☐	☐	☐	☐
3,167	3,167 H7	3,179/3,167	.1252/ .1247	3	**NS06-3.167 H7-EB...**	4	30	6	50	NFQF06...	☐	☐	☐	☐	☐
3,175	3,175 H7	3,175/3,187	.1250/ .1255	3	**NS06-3.175 H7-EB...**	4	30	6	50	NFQF06...	☐	☐	☐	☐	☐
3,49	3,49 H7	3,490/3,502	.1374/ .1379	3,3-3,4	**NS06-3.49 H7-EB...**	4	30	6	50	NFQF06...	☐	☐	☐	☐	☐
3,50	3,5 H7	3,500/3,512	.1378/ .1383	3,3-3,4	**NS06-3.5 H7-EB...**	4	30	6	50	NFQF06...	☐	☐	☐	☐	☐
3,51	3,51 H7	3,510/3,522	.1382/ .1387	3,3-3,4	**NS06-3.51 H7-EB...**	4	30	6	50	NFQF06...	☐	☐	☐	☐	☐
3,52	3,52 H7	3,520/3,532	.1386/ .1391	3,3-3,4	**NS06-3.52 H7-EB...**	4	30	6	50	NFQF06...	☐	☐	☐	☐	☐
3,97	3,97 H7	3,970/3,982	.1563/ .1568	3,8-3,9	**NS06-3.97 H7-EB...**	4	30	6	50	NFQF06...	☐	☐	☐	☐	☐
3,98	3,98 H7/4 P7	3,980/3,992	.1567/ .1572	3,8-3,9	**NS06-3.98 H7-EB...**	4	30	6	50	NFQF06...	☐	☐	☐	☐	☐
3,99	3,99 H7/4 K8	3,990/4,002	.1571/ .1576	3,8-3,9	**NS06-3.99 H7-EB...**	4	30	6	50	NFQF06...	☐	☐	☐	☐	☐
4,00	4 H7	4,000/4,012	.1575/ .1580	3,8-3,9	**NS06-4 H7-EB...**	4	30	6	50	NFQF06...	☐	☐	☐	☐	☐
4,01	4,01 H7/4 F7	4,010/4,022	.1579/ .1583	3,8-3,9	**NS06-4.01 H7-EB...**	4	30	6	50	NFQF06...	☐	☐	☐	☐	☐
4,02	4,02 H7/4 E7	4,020/4,032	.1583/ .1587	3,9	**NS06-4.02 H7-EB...**	4	30	6	50	NFQF06...	☐	☐	☐	☐	☐
4,03	4,03 H7/4 D7	4,030/4,042	.1587/ .1591	3,9	**NS06-4.03 H7-EB...**	4	30	6	50	NFQF06...	☐	☐	☐	☐	☐
4,04	4,04 H7	4,040/4,052	.1591/ .1595	3,9	**NS06-4.04 H7-EB...**	4	30	6	50	NFQF06...	☐	☐	☐	☐	☐
4,05	4,05 H7	4,050/4,062	.1594/ .1599	3,9	**NS06-4.05 H7-EB...**	4	30	6	50	NFQF06...	☐	☐	☐	☐	☐
4,50	4,5 H7	4,500/4,512	.1772/ .1776	4,3-4,4	**NS06-4.5 H7-EB...**	4	30	6	50	NFQF06...	☐	☐	☐	☐	☐
4,75	4,75 H7	4,750/4,762	.1870/ .1875	4,5	**NS06-4.750 H7-EB...**	4	30	6	50	NFQF06...	☐	☐	☐	☐	☐
4,762	4,762 H7	4,762/4,774	.1875/ .1880	4,5	**NS06-4.762 H7-EB...**	4	30	6	50	NFQF06...	☐	☐	☐	☐	☐
4,97	4,97 H7	4,970/4,982	.1957/ .1961	4,8-4,9	**NS06-4.97 H7-EB...**	4	30	6	50	NFQF06...	☐	☐	☐	☐	☐
4,98	4,98 H7/5 P7	4,980/4,992	.1961/ .1965	4,8-4,9	**NS06-4.98 H7-EB...**	4	30	6	50	NFQF06...	☐	☐	☐	☐	☐
4,99	4,99 H7/5 K8	4,990/5,002	.1965/ .1969	4,8-4,9	**NS06-4.99 H7-EB...**	4	30	6	50	NFQF06...	☐	☐	☐	☐	☐
5,00	5 H7	5,000/5,012	.1969/ .1973	4,8-4,9	**NS06-5 H7-EB...**	4	30	6	50	NFQF06...	☐	☐	☐	☐	☐
5,01	5,01 H7/5 F7	5,010/5,022	.1972/ .1977	4,8-4,9	**NS06-5.01 H7-EB...**	4	30	6	50	NFQF06...	☐	☐	☐	☐	☐
5,02	5,02 H7/5 E7	5,020/5,032	.1976/ .1981	4,9	**NS06-5.02 H7-EB...**	4	30	6	50	NFQF06...	☐	☐	☐	☐	☐
5,03	5,03 H7/5 D7	5,030/5,042	.1980/ .1985	4,9	**NS06-5.03 H7-EB...**	4	30	6	50	NFQF06...	☐	☐	☐	☐	☐
5,04	5,04 H7	5,040/5,052	.1984/ .1989	4,9	**NS06-5.04 H7-EB...**	4	30	6	50	NFQF06...	☐	☐	☐	☐	☐
5,05	5,05 H7	5,050/5,062	.1988/ .1993	4,9	**NS06-5.05 H7-EB...**	4	30	6	50	NFQF06...	☐	☐	☐	☐	☐
5,50	5,5 H7	5,500/5,512	.2165/ .2170	5,3-5,4	**NS06-5.5 H7-EB...**	4	30	6	50	NFQF06...	☐	☐	☐	☐	☐
5,97	5,97 H7	5,970/5,982	.2350/ .2355	5,8-5,9	**NS06-5.97 H7-EB...**	4	31	6	50	NFQF06...	☐	☐	☐	☐	☐
5,98	5,98 H7/6 P7	5,980/5,992	.2354/ .2359	5,8-5,9	**NS06-5.98 H7-EB...**	4	31	6	50	NFQF06...	☐	☐	☐	☐	☐
5,99	5,99 H7/6 K8	5,990/6,002	.2358/ .2363	5,8-5,9	**NS06-5.99 H7-EB...**	4	31	6	50	NFQF06...	☐	☐	☐	☐	☐
6,00	6 H7	6,000/6,012	.2362/ .2367	5,8-5,9	**NS06-6 H7-EB...**	4	31	6	50	NFQF06...	☐	☐	☐	☐	☐
6,01	6,01 H7/6 F7	6,010/6,025	.2366/ .2372	5,8-5,9	**NS06-6,01 H7-EB...**	4	31	6	50	NFQF06...	☐	☐	☐	☐	☐

☐ **= Non stock standard. Subject to change refer to current price- and stock-list**

Note: When ordering Nanofix reamers for intermediate diameters, please state diameter and tolerance of hole to be reamed.
Ordering example: NS10-10,187/10,213-EB845, RX2000.

Reamer for blind and through holes ∅ 6,02- 9,97 - short version



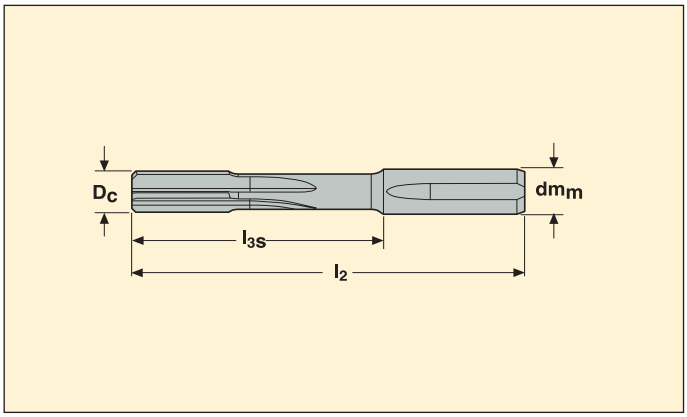

D_c	Hole dia ISO (mm)	Hole dia min/max (mm)	Hole dia min/max (inch)	Seco drill size (mm)	Part No.	Dimensions in mm					Geometries			Grades	
							l_{3s}	dm_m	l_2	Body size	EB45	EB845	EB25	RX2000	H15
6,02	6,02 H7/6 E7	6,020/6,035	.2370/ .2376	5,9	**NS06-6.02 H7-EB...**	4	31	6	50	NFQF06...	☐	☐	☐	☐	☐
6,03	6,03 H7/6 D7	6,030/6,045	.2374/ .2380	5,9	**NS06-6.03 H7-EB...**	4	31	6	50	NFQF06...	☐	☐	☐	☐	☐
6,04	6,04 H7	6,040/6,055	.2378/ .2384	5,9	**NS06-6.04 H7-EB...**	4	31	6	50	NFQF06...	☐	☐	☐	☐	☐
6,05	6,05 H7	6,050/6,065	.2382/ .2388	5,9	**NS06-6.05 H7-EB...**	4	31	6	50	NFQF06...	☐	☐	☐	☐	☐
6,334	6,334 H7	6,334/6,349	.2494/ .2500	6,1-6,2	**NS10-6.334 H7-EB...**	6	46	10	78	NFQF10...	☐	☐	☐	☐	☐
6,35	6,35 H7	6,35/6,365	.2500/ .2506	6,2	**NS10-6.350 H7-EB...**	6	46	10	78	NFQF10...	☐	☐	☐	☐	☐
6,375	6,375 H7	6,375/6,39	.2510/ .2516	6,2	**NS10-6.375 H7-EB...**	6	46	10	78	NFQF10...	☐	☐	☐	☐	☐
6,50	6,5 H7	6,500/6,515	.2559/ .2565	6,3-6,35-6,4	**NS10-6.5 H7-EB...**	6	46	10	78	NFQF10...	☐	☐	☐	☐	☐
6,97	6,97 H7	6,970/6,985	.2744/ .2750	6,8-6,9	**NS10-6.97 H7-EB...**	6	46	10	78	NFQF10...	☐	☐	☐	☐	☐
6,98	6,98 H7	6,980/6,995	.2748/ .2754	6,8-6,9	**NS10-6.98 H7-EB...**	6	46	10	78	NFQF10...	☐	☐	☐	☐	☐
6,99	6,99 H7/7 K7	6,990/7,005	.2752/ .2758	6,8-6,9	**NS10-6.99 H7-EB...**	6	46	10	78	NFQF10...	☐	☐	☐	☐	☐
7,00	7 H7	7,000/7,015	.2756/ .2762	6,8-6,9	**NS10-7 H7-EB...**	6	46	10	78	NFQF10...	☐	☐	☐	☐	☐
7,01	7,01 H7	7,010/7,025	.2760/ .2766	6,8-6,9	**NS10-7.01 H7-EB...**	6	46	10	78	NFQF10...	☐	☐	☐	☐	☐
7,02	7,02 H7	7,020/7,035	.2764/ .2770	6,9	**NS10-7.02 H7-EB...**	6	46	10	78	NFQF10...	☐	☐	☐	☐	☐
7,03	7,03 H7/7 E8	7,030/7,045	.2768/ .2774	6,9	**NS10-7.03 H7-EB...**	6	46	10	78	NFQF10...	☐	☐	☐	☐	☐
7,04	7,04 H7/7 D7	7,040/7,055	.2772/ .2778	6,9	**NS10-7.04 H7-EB...**	6	46	10	78	NFQF10...	☐	☐	☐	☐	☐
7,05	7,05 H7	7,050/7,065	.2776/ .2781	6,9	**NS10-7.05 H7-EB...**	6	46	10	78	NFQF10...	☐	☐	☐	☐	☐
7,50	7,5 H7	7,500/7,515	.2953/ .2959	7,3-7,4	**NS10-7.5 H7-EB...**	6	46	10	78	NFQF10...	☐	☐	☐	☐	☐
7,937	7,937 H7	7,937/7,952	.3125/ .3131	7,8	**NS10-7.9375 H7-EB...**	6	46	10	78	NFQF10...	☐	☐	☐	☐	☐
7,97	7,97 H7	7,970/7,985	.3138/ .3144	7,8-7,9	**NS10-7.97 H7-EB...**	6	46	10	78	NFQF10...	☐	☐	☐	☐	☐
7,98	7,98 H7	7,980/7,995	.3142/ .3148	7,8-7,9	**NS10-7.98 H7-EB...**	6	46	10	78	NFQF10...	☐	☐	☐	☐	☐
7,99	7,99 H7/8 K7	7,990/8,005	.3146/ .3152	7,8-7,9	**NS10-7.99 H7-EB...**	6	46	10	78	NFQF10...	☐	☐	☐	☐	☐
8,00	8 H7	8,000/8,015	.3150/ .3156	7,8-7,9	**NS10-8 H7-EB...**	6	46	10	78	NFQF10...	☐	☐	☐	☐	☐
8,01	8,01 H7	8,010/8,025	.3154/ .3159	7,8-7,9	**NS10-8.01 H7-EB...**	6	46	10	78	NFQF10...	☐	☐	☐	☐	☐
8,02	8,02 H7	8,020/8,035	.3157/ .3163	7,9	**NS10-8.02 H7-EB...**	6	46	10	78	NFQF10...	☐	☐	☐	☐	☐
8,03	8,03 H7/8 E8	8,030/8,045	.3161/ .3167	7,9	**NS10-8.03 H7-EB...**	6	46	10	78	NFQF10...	☐	☐	☐	☐	☐
8,04	8,04 H7/8 D7	8,040/8,055	.3165/ .3171	7,9	**NS10-8.04 H7-EB...**	6	46	10	78	NFQF10...	☐	☐	☐	☐	☐
8,05	8,05 H7	8,050/8,065	.3169/ .3175	7,9	**NS10-8.05 H7-EB...**	6	46	10	78	NFQF10...	☐	☐	☐	☐	☐
8,50	8,5 H7	8,500/8,515	.3346/ .3352	8,3-8,338-8,4	**NS10-8.5 H7-EB...**	6	46	10	78	NFQF10...	☐	☐	☐	☐	☐
8,97	8,97 H7	8,970/8,985	.3531/ .3537	8,8-8,9	**NS10-8.97 H7-EB...**	6	46	10	78	NFQF10...	☐	☐	☐	☐	☐
8,98	8,98 H7	8,980/8,995	.3535/ .3541	8,8-8,9	**NS10-8.98 H7-EB...**	6	46	10	78	NFQF10...	☐	☐	☐	☐	☐
8,99	8,99 H7/9 K7	8,990/9,005	.3539/ .3545	8,8-8,9	**NS10-8.99 H7-EB...**	6	46	10	78	NFQF10...	☐	☐	☐	☐	☐
9,00	9 H7	9,000/9,015	.3543/ .3549	8,8-8,9	**NS10-9 H7-EB...**	6	46	10	78	NFQF10...	☐	☐	☐	☐	☐
9,01	9,01 H7	9,010/9,025	.3547/ .3553	8,8-8,9	**NS10-9.01 H7-EB...**	6	46	10	78	NFQF10...	☐	☐	☐	☐	☐
9,02	9,02 H7	9,020/9,035	.3551/ .3557	8,9	**NS10-9.02 H7-EB...**	6	46	10	78	NFQF10...	☐	☐	☐	☐	☐
9,03	9,03 H7/9 E8	9,030/9,045	.3555/ .3561	8,9	**NS10-9.03 H7-EB...**	6	46	10	78	NFQF10...	☐	☐	☐	☐	☐
9,04	9,04 H7/9 D7	9,040/9,055	.3559/ .3565	8,9	**NS10-9.04 H7-EB...**	6	46	10	78	NFQF10...	☐	☐	☐	☐	☐
9,05	9,05 H7	9,050/9,065	.3563/ .3569	8,9	**NS10-9.05 H7-EB...**	6	46	10	78	NFQF10...	☐	☐	☐	☐	☐
9,50	9,5 H7	9,500/9,515	.3740/ .3746	9,3-9,4	**NS10-9.5 H7-EB...**	6	46	10	78	NFQF10...	☐	☐	☐	☐	☐
9,512	9,512 H7	9,512/9,527	.3745/ .3751	9,3-9,4	**NS10-9.5123 H7-EB...**	6	46	10	78	NFQF10...	☐	☐	☐	☐	☐
9,525	9,525 H7	9,525/9,54	.3750/ .3756	9,3-9,4	**NS10-9.5250 H7-EB...**	6	46	10	78	NFQF10...	☐	☐	☐	☐	☐
9,97	9,97 H7	9,970/9,985	.3925/ .3931	9,8-9,9	**NS10-9.97 H7-EB...**	6	46	10	78	NFQF10...	☐	☐	☐	☐	☐

☐ **= Non stock standard. Subject to change refer to current price- and stock-list**

Note: When ordering Nanofix reamers for intermediate diameters, please state diameter and tolerance of hole to be reamed.

Ordering example: NS10-10,187/10,213-EB845, RX2000.

Reamer for blind and through holes ∅ 9,98 - 12,05 - short version



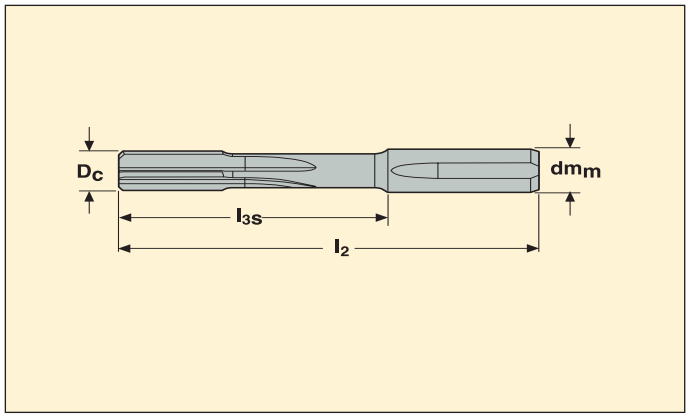

D_c	Hole dia ISO (mm)	Hole dia min/max (mm)	Hole dia min/max (inch)	Seco drill size (mm)	Part No.	Dimensions in mm					Geometries			Grades	
							l_{3s}	dm_m	l_2	Body size	EB45	EB845	EB25	RX2000	H15
9,98	9,98 H7	9,980/9,995	.3929/ .3935	9,8-9,9	**NS10-9.98 H7-EB...**	6	46	10	78	NFQF10...	□	□	□	□	□
9,99	9,99 H7/10 K7	9,990/10,005	.3933/ .3939	9,8-9,9	**NS10-9.99 H7-EB...**	6	46	10	78	NFQF10...	□	□	□	□	□
10,00	10 H7	10,000/10,015	.3937/ .3943	9,8-9,9	**NS10-10 H7-EB...**	6	46	10	78	NFQF10...	□	□	□	□	□
10,01	10,01 H7	10,010/10,028	.3941/ .3948	9,8-9,9	**NS10-10.01 H7-EB...**	6	46	10	78	NFQF10...	□	□	□	□	□
10,02	10,02 H7	10,020/10,038	.3945/ .3952	9,8-9,9	**NS10-10.02 H7-EB...**	6	46	10	78	NFQF10...	□	□	□	□	□
10,03	10,03 H7/10 E8	10,030/10,048	.3949/ .3956	9,9	**NS10-10.03 H7-EB...**	6	46	10	78	NFQF10...	□	□	□	□	□
10,04	10,04 H7/10 D7	10,040/10,058	.3953/ .3960	9,9	**NS10-10.04 H7-EB...**	6	46	10	78	NFQF10...	□	□	□	□	□
10,05	10,05 H7	10,050/10,068	.3957/ .3964	9,9	**NS10-10.05 H7-EB...**	6	46	10	78	NFQF10...	□	□	□	□	□
10,50	10,5 H7	10,500/10,518	.4134/ .4141	10,319-10,4	**NS10-10.5 H7-EB...**	6	57	10	88	NFQF10...	□	□	□	□	□
10,97	10,97 H7	10,970/10,988	.4319/ .4326	10,8	**NS10-10.97 H7-EB...**	6	57	10	88	NFQF10...	□	□	□	□	□
10,98	10,98 H7	10,980/10,998	.4323/ .4330	10,8	**NS10-10.98 H7-EB...**	6	57	10	88	NFQF10...	□	□	□	□	□
10,99	10,99 H7	10,990/11,008	.4327/ .4334	10,8	**NS10-10.99 H7-EB...**	6	57	10	88	NFQF10...	□	□	□	□	□
11,00	11 H7	11,000/11,018	.4331/ .4338	10,8	**NS10-11 H7-EB...**	6	57	10	88	NFQF10...	□	□	□	□	□
11,01	11,01 H7	11,010/11,028	.4335/ .4342	10,8	**NS10-11.01 H7-EB...**	6	57	10	88	NFQF10...	□	□	□	□	□
11,02	11,02 H7/11 F8	11,020/11,038	.4339/ .4346	10,8	**NS10-11.02 H7-EB...**	6	57	10	88	NFQF10...	□	□	□	□	□
11,03	11,03 H7	11,030/11,048	.4343/ .4350	10,8	**NS10-11.03 H7-EB...**	6	57	10	88	NFQF10...	□	□	□	□	□
11,04	11,04 H7/11 E7	11,040/11,058	.4346/ .4354	10,8	**NS10-11.04 H7-EB...**	6	57	10	88	NFQF10...	□	□	□	□	□
11,05	11,05 H7/11 D7	11,050/11,068	.4350/ .4357	10,8	**NS10-11.05 H7-EB...**	6	57	10	88	NFQF10...	□	□	□	□	□
11,112	11,112 H7	11,112/11,130	.4375/ .4382	10,9-11	**NS10-11.112 H7-EB...**	6	57	10	88	NFQF10...	□	□	□	□	□
11,50	11,5 H7	11,500/11,518	.4528/ .4535	11,3	**NS10-11.5 H7-EB...**	6	57	10	88	NFQF10...	□	□	□	□	□
11,97	11,97 H7	11,970/11,988	.4713/ .4720	11,8	**NS10-11.97 H7-EB...**	6	57	10	88	NFQF10...	□	□	□	□	□
11,98	11,98 H7	11,980/11,998	.4717/ .4724	11,8	**NS10-11.98 H7-EB...**	6	57	10	88	NFQF10...	□	□	□	□	□
11,99	11,99 H7	11,990/12,008	.4720/ .4728	11,8	**NS10-11.99 H7-EB...**	6	57	10	88	NFQF10...	□	□	□	□	□
12,00	12 H7	12,000/12,018	.4724/ .4731	11,8	**NS10-12 H7-EB...**	6	57	10	88	NFQF10...	□	□	□	□	□
12,01	12,01 H7	12,010/12,028	.4728/ .4735	11,8	**NS10-12.01 H7-EB...**	6	57	10	88	NFQF10...	□	□	□	□	□
12,02	12,02 H7/12 F8	12,020/12,038	.4732/ .4739	11,8-11,906	**NS10-12.02 H7-EB...**	6	57	10	88	NFQF10...	□	□	□	□	□
12,03	12,03 H7	12,030/12,048	.4736/ .4743	11,8-11,906	**NS10-12.03 H7-EB...**	6	57	10	88	NFQF10...	□	□	□	□	□
12,04	12,04 H7/12 E7	12,040/12,058	.4740/ .4747	11,8-11,906	**NS10-12.04 H7-EB...**	6	57	10	88	NFQF10...	□	□	□	□	□
12,05	12,05 H7/12 D7	12,050/12,068	.4744/ .4751	11,8-11,906	**NS10-12.05 H7-EB...**	6	57	10	88	NFQF10...	□	□	□	□	□

□ **= Non stock standard. Subject to change refer to current price- and stock-list**

Note: When ordering Nanofix reamers for intermediate diameters, please state diameter and tolerance of hole to be reamed.
Ordering example: NS10-10,187/10,213-EB845, RX2000.

Intermediate diameter



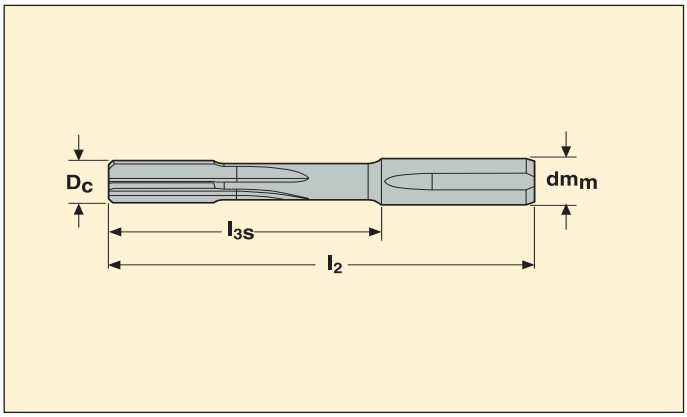

D_c	Part No.	Dimensions in mm					Geometries			Grades	
			l_{3s}	dm_m	l_2	Body size	EB45	EB845	EB25	RX2000	H15
2,970-3,050	**NS06_XX-XXX-XXXX**	4	25	6	45	NFQF06...	☐	☐	☐	☐	☐
3,051-5,050	**NS06_XX-XXX-XXXX**	4	30	6	50	NFQF06...	☐	☐	☐	☐	☐
5,051-6,050	**NS06_XX-XXX-XXXX**	4	31	6	50	NFQF06...	☐	☐	☐	☐	☐
6,051-8,050	**NS10_XX-XXX-XXXX**	6	46	10	78	NFQF10...	☐	☐	☐	☐	☐
8,051-10,050	**NS10_XX-XXX-XXXX**	6	46	10	78	NFQF10...	☐	☐	☐	☐	☐
10,051-12,050	**NS10_XX-XXX-XXXX**	6	57	10	88	NFQF10...	☐	☐	☐	☐	☐

☐ **= Non stock standard. Subject to change refer to current price- and stock-list**

Note: When ordering Nanofix reamers for intermediate diameters, please state diameter and tolerance of hole to be reamed.

Ordering example: NS10-10,187/10,213-EB845, RX2000.

Nanofix tool holder



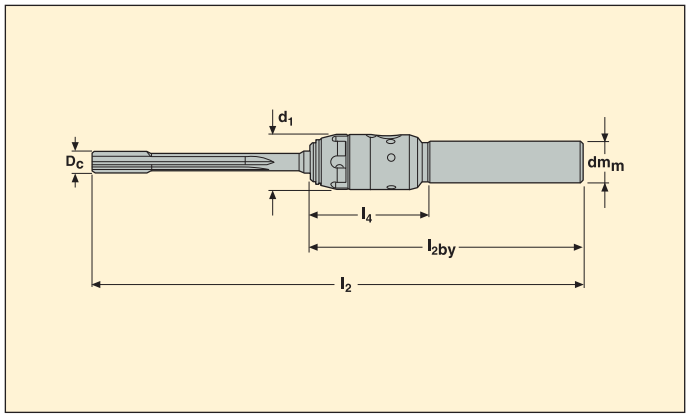

Part No.	Dimensions in mm				
	D_c	dm_m	d_1	l_4	l_{2by}
NFQF06-03700-10N1	2,970-6,050	10	16	37	80
NFQF06-03300-12N1	2,970-6,050	12	16	33	80
NFQF06-03000-16N1	2,970-6,050	16	16	30	80
NFQF10-05200-12N1	6,051-12,050	12	23	52	100
NFQF10-04900-16N1	6,051-12,050	16	23	49	100
NFQF10-04700-20N1	6,051-12,050	20	23	47	100

D_c	l_2
2,970-3,050	124,5
3,051-6,050	144,5
6,051-8,050	189,5
8,051-10,050	199,5
10,051-12,050	219,5

Spare Parts

	Spare Clamping Kit	Key
	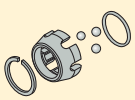	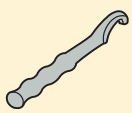
2,97-6,050	NF06-CLKI	CLC06KEY
6,051-12,050	NF10-CLKI	CLC10KEY

Spare clamping kit for Nanofix holders includes:
- 1 clamping nut
- 1 axial stop spring ring
- 3 clamping balls (dia 3,5 mm for size NF06 & dia 5 mm for size NF10)
- 1 fool-proof ball (dia 3 mm for size NF06 & dia 4 mm for size NF10)
- 1 o-ring

Note: fool-proof ball not shown on above view.

Nanofix tool holder – inch



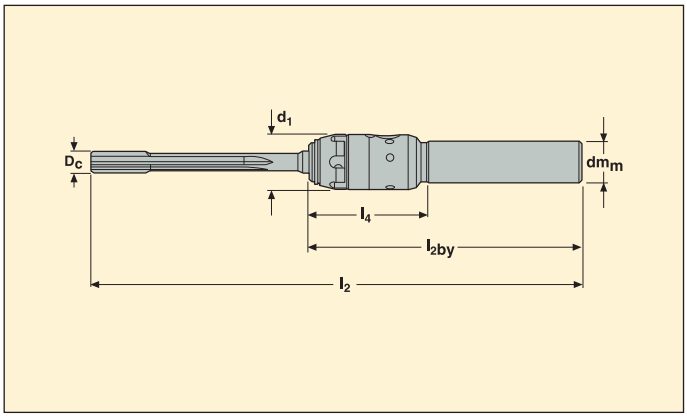

Part No.	Dimensions in mm				
	D_c	dm_m	d_1	l_4	l_{2by}
NFQF06-11811-0625N1	2,970-6,050	0.625	0.630	1.181	3.150
NFQF06-12992-0500N1	2,970-6,050	0.500	0.630	1.299	3.150
NFQF06-14567-0375N1	2,970-6,050	0.375	0.630	1.457	3.150
NFQF10-18504-07500N1	6,051-12,050	0.750	0.906	1.850	3.937
NFQF10-19291-0625N1	6,051-12,050	0.625	0.906	1.929	3.937
NFQF10-20472-0500N1	6,051-12,050	0.500	0.906	2.047	3.937

D_c	l_2
2,970-3,050	124,5
3,051-6,050	144,5
6,051-8,050	189,5
8,051-10,050	199,5
10,051-12,050	219,5

Spare Parts

	Spare Clamping Kit	Key
	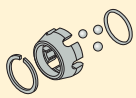	
2,97-6,050	NF06-CLKI	CLC06KEY
6,051-12,050	NF10-CLKI	CLC10KEY

Spare clamping kit for Nanofix holders includes:
- 1 clamping nut
- 1 axial stop spring ring
- 3 clamping balls (dia 3,5 mm for size NF06 & dia 5 mm for size NF10)
- 1 fool-proof ball (dia 3 mm for size NF06 & dia 4 mm for size NF10)
- 1 o-ring

Note: fool-proof ball not shown on above view.

Cutting data – NF/NS...-EB845

SMG		a_p (Ø)		f		V_c		
		z=4	z=6	z=4	z=6	H15	CP20	RX2000
P3	NF/NS-EB845	0,10-0,15	0,1-0,20	0,10-0,30	0,20-0,60	-	60 (30-100)	80 (30-150)
P4	NF/NS-EB845	0,10-0,15	0,1-0,20	0,10-0,20	0,20-0,50	-	50 (30-80)	60 (30-120)
P5	NF/NS-EB845	0,10-0,15	0,1-0,20	0,10-0,20	0,20-0,50	20 (10-25)	50 (30-80)	60 (30-120)
P6	NF/NS-EB845	0,10-0,15	0,1-0,20	0,10-0,20	0,20-0,50	20 (10-25)	50 (30-80)	60 (30-120)
P7	NF/NS-EB845	0,10-0,15	0,1-0,20	0,10-0,20	0,20-0,50	20 (10-25)	50 (30-80)	60 (30-120)
P8	NF/NS-EB845	0,10-0,15	0,1-0,20	0,10-0,20	0,20-0,50	15 (10-20)	35 (20-60)	40 (20-80)
P11	NF/NS-EB845	0,10-0,15	0,1-0,20	0,10-0,20	0,20-0,50	15 (10-20)	35 (20-60)	40 (20-80)
K1	NF/NS-EB845	0,10-0,20	0,10-0,25	0,10-0,30	0,20-0,60	25 (15-30)	60 (40-100)	80 (30-150)
K2	NF/NS-EB845	0,10-0,20	0,10-0,25	0,10-0,30	0,20-0,60	-	25 (20-40)	40 (30-70)
K3	NF/NS-EB845	0,10-0,20	0,10-0,25	0,10-0,30	0,20-0,60	25 (15-30)	60 (40-100)	80 (30-150)
K4	NF/NS-EB845	0,10-0,20	0,10-0,25	0,10-0,30	0,20-0,60	25 (15-30)	45 (30-70)	70 (40-120)
K5	NF/NS-EB845	0,10-0,20	0,10-0,25	0,10-0,30	0,20-0,60	25 (15-30)	45 (30-70)	70 (40-120)
K6	NF/NS-EB845	0,10-0,20	0,10-0,25	0,10-0,30	0,20-0,60	-	60 (40-100)	80 (30-150)
K7	NF/NS-EB845	0,10-0,20	0,10-0,25	0,10-0,30	0,20-0,60	-	60 (40-100)	80 (30-150)
S1	NF/NS-EB845	0,08-0,15	0,10-0,15	0,10-0,20	0,20-0,30	-	15 (8-20)	20 (10-25)
S2	NF/NS-EB845	0,08-0,15	0,10-0,15	0,10-0,20	0,20-0,30	-	15 (8-20)	20 (10-25)
S3	NF/NS-EB845	0,08-0,15	0,10-0,15	0,10-0,20	0,20-0,30	-	15 (8-20)	20 (10-25)
S11	NF/NS-EB845	0,08-0,15	0,10-0,15	0,10-0,20	0,20-0,30	20 (15-30)	30 (15-40)	40 (20-50)
S12	NF/NS-EB845	0,08-0,15	0,10-0,15	0,10-0,20	0,20-0,30	20 (15-30)	30 (15-40)	40 (20-50)
S13	NF/NS-EB845	0,08-0,15	0,10-0,15	0,10-0,20	0,20-0,30	20 (15-30)	30 (15-40)	40 (20-50)
H3	NF/NS-EB845	0,08-0,15	0,10-0,15	0,10-0,20	0,20-0,30	-	-	10 (8-15)
H5	NF/NS-EB845	0,08-0,15	0,10-0,15	0,10-0,20	0,20-0,30	-	-	10 (8-15)
H7	NF/NS-EB845	0,08-0,15	0,10-0,15	0,10-0,20	0,20-0,30	-	-	10 (8-15)
H8	NF/NS-EB845	0,08-0,15	0,10-0,15	0,10-0,20	0,20-0,30	-	-	10 (8-15)
H11	NF/NS-EB845	0,08-0,15	0,10-0,15	0,10-0,20	0,20-0,30	-	-	10 (8-15)
H12	NF/NS-EB845	0,08-0,15	0,10-0,15	0,10-0,20	0,20-0,30	-	-	10 (8-15)
H21	NF/NS-EB845	0,08-0,15	0,10-0,15	0,10-0,20	0,20-0,30	-	-	10 (8-15)
H31	NF/NS-EB845	0,08-0,15	0,10-0,15	0,10-0,20	0,20-0,30	-	-	10 (8-15)
PM1	NF/NS-EB845	0,10-0,15	0,1-0,20	0,10-0,20	0,20-0,50	-	50 (30-80)	70 (40-100)
PM2	NF/NS-EB845	0,10-0,15	0,1-0,20	0,10-0,20	0,20-0,50	-	50 (30-80)	70 (40-100)
PM3	NF/NS-EB845	0,10-0,15	0,1-0,20	0,10-0,20	0,20-0,50	-	50 (30-80)	70 (40-100)

Cutting data – NF/NS-EB25

SMG		a_p (Ø)		f		V_c		
		z=4	z=6	z=4	z=6	H15	CP20	RX2000
P1	NF/NS-EB25	0,10-0,15	0,1-0,20	0,3-0,9	0,5-1,2	25 (15-30)	60 (30-100)	80 (30-150)
P2	NF/NS-EB25	0,10-0,15	0,1-0,20	0,3-0,9	0,5-1,2	25 (15-30)	60 (30-100)	80 (30-150)
P3	NF/NS-EB25	0,10-0,15	0,1-0,20	0,3-0,9	0,5-1,2	25 (15-30)	60 (30-100)	80 (30-150)
P4	NF/NS-EB25	0,10-0,15	0,1-0,20	0,3-0,7	0,5-1	20 (10-25)	50 (30-80)	60 (30-120)
P5	NF/NS-EB25	0,10-0,15	0,1-0,20	0,3-0,7	0,5-1	20 (10-25)	50 (30-80)	60 (30-120)
P6	NF/NS-EB25	0,10-0,15	0,1-0,20	0,3-0,7	0,5-1	20 (10-25)	50 (30-80)	60 (30-120)
P7	NF/NS-EB25	0,10-0,15	0,1-0,20	0,3-0,7	0,5-1	20 (10-25)	50 (30-80)	60 (30-120)
M1	NF/NS-EB25	0,08-0,15	0,10-0,15	0,3-0,7	0,5-1	-	25 (15-40)	35 (20-60)
K1	NF/NS-EB25	0,10-0,20	0,10-0,25	0,3-0,9	0,5-1,2	25 (15-30)	60 (40-100)	80 (30-150)
K2	NF/NS-EB25	0,10-0,20	0,10-0,25	0,3-0,9	0,5-1,2		25 (20-40)	40 (30-70)
K3	NF/NS-EB25	0,10-0,20	0,10-0,25	0,3-0,9	0,5-1,2	25 (15-30)	60 (40-100)	80 (30-150)
K4	NF/NS-EB25	0,10-0,20	0,10-0,25	0,3-0,9	0,5-1,2	25 (15-30)	45 (30-70)	70 (40-120)
K5	NF/NS-EB25	0,10-0,20	0,10-0,25	0,3-0,9	0,5-1,2	25 (15-30)	45 (30-70)	70 (40-120)
K6	NF/NS-EB25	0,10-0,20	0,10-0,25	0,3-0,9	0,5-1,2	-	60 (40-100)	80 (30-150)
K7	NF/NS-EB25	0,10-0,20	0,10-0,25	0,3-0,9	0,5-1,2	-	60 (40-100)	80 (30-150)
N1	NF/NS-EB25	0,10-20	0,10-0,30	0,3-0,9	0,5-1,2	50 (20-80)	-	-
N2	NF/NS-EB25	0,10-20	0,10-0,30	0,3-0,9	0,5-1,2	50 (20-80)	-	-
N3	NF/NS-EB25	0,10-20	0,10-0,30	0,3-0,9	0,5-1,2	50 (20-80)	-	-
N11	NF/NS-EB25	0,10-20	0,10-0,30	0,3-0,9	0,5-1,2	50 (20-80)	-	-
PM1	NF/NS-EB25	0,10-0,15	0,1-0,20	0,3-0,9	0,5-1,2	-	50 (30-80)	70 (40-100)
PM2	NF/NS-EB25	0,10-0,15	0,1-0,20	0,3-0,9	0,5-1,2	-	50 (30-80)	70 (40-100)
PM3	NF/NS-EB25	0,10-0,15	0,1-0,20	0,3-0,9	0,5-1,2	-	50 (30-80)	70 (40-100)

Cutting data – NF/NS...-EB45

SMG		a_p (Ø)		f		V_c		
		z=4	z=6	z=4	z=6	H15	CP20	RX2000
P1	NF/NS-EB45	0,10-0,15	0,1-0,20	0,10-0,30	0,20-0,60	25 (15-30)	60 (30-100)	80 (30-150)
P2	NF/NS-EB45	0,10-0,15	0,1-0,20	0,10-0,30	0,20-0,60	25 (15-30)	60 (30-100)	80 (30-150)
P3	NF/NS-EB45	0,10-0,15	0,1-0,20	0,10-0,30	0,20-0,60	25 (15-30)	60 (30-100)	80 (30-150)
P4	NF/NS-EB45	0,10-0,15	0,1-0,20	0,10-0,20	0,20-0,50	20 (10-25)	50 (30-80)	60 (30-120)
P5	NF/NS-EB45	0,10-0,15	0,1-0,20	0,10-0,20	0,20-0,50	20 (10-25)	50 (30-80)	60 (30-120)
P6	NF/NS-EB45	0,10-0,15	0,1-0,20	0,10-0,20	0,20-0,50	20 (10-25)	50 (30-80)	60 (30-120)
P7	NF/NS-EB45	0,10-0,15	0,1-0,20	0,10-0,20	0,20-0,50	20 (10-25)	50 (30-80)	60 (30-120)
P8	NF/NS-EB45	0,10-0,15	0,1-0,20	0,10-0,20	0,20-0,50	15 (10-20)	35 (20-60)	40 (20-80)
P11	NF/NS-EB45	0,10-0,15	0,1-0,20	0,10-0,20	0,20-0,50	15 (10-20)	35 (20-60)	40 (20-80)
M1	NF/NS-EB45	0,08-0,15	0,10-0,15	0,10-0,20	0,20-0,50	12 (9-15)	25 (15-40)	35 (20-60)
M2	NF/NS-EB45	0,08-0,15	0,10-0,15	0,10-0,20	0,20-0,50	-	25 (15-40)	35 (20-60)
M3	NF/NS-EB45	0,08-0,15	0,10-0,15	0,10-0,20	0,20-0,50	-	25 (15-40)	35 (20-60)
M4	NF/NS-EB45	0,08-0,15	0,10-0,15	0,10-0,20	0,20-0,50	-	20 (10-30)	25 (15-40)
M5	NF/NS-EB45	0,08-0,15	0,10-0,15	0,10-0,20	0,20-0,50	-	20 (10-30)	25 (15-40)
K1	NF/NS-EB45	0,10-0,20	0,10-0,25	0,10-0,30	0,20-0,60	25 (15-30)	60 (40-100)	80 (30-150)
K2	NF/NS-EB45	0,10-0,20	0,10-0,25	0,10-0,30	0,20-0,60	-	25 (20-40)	40 (30-70)
K3	NF/NS-EB45	0,10-0,20	0,10-0,25	0,10-0,30	0,20-0,60	25 (15-30)	60 (40-100)	80 (30-150)
K4	NF/NS-EB45	0,10-0,20	0,10-0,25	0,10-0,30	0,20-0,60	25 (15-30)	45 (30-70)	70 (40-120)
K5	NF/NS-EB45	0,10-0,20	0,10-0,25	0,10-0,30	0,20-0,60	25 (15-30)	45 (30-70)	70 (40-120)
K6	NF/NS-EB45	0,10-0,20	0,10-0,25	0,10-0,30	0,20-0,60	-	60 (40-100)	80 (30-150)
K7	NF/NS-EB45	0,10-0,20	0,10-0,25	0,10-0,30	0,20-0,60	-	60 (40-100)	80 (30-150)
N1	NF/NS-EB45	0,10-20	0,10-0,30	0,10-0,30	0,20-0,60	50 (20-80)	-	80 (30-150)
N2	NF/NS-EB45	0,10-20	0,10-0,30	0,10-0,30	0,20-0,60	50 (20-80)	-	80 (30-150)
N3	NF/NS-EB45	0,10-20	0,10-0,30	0,10-0,30	0,20-0,60	50 (20-80)	-	80 (30-150)
N11	NF/NS-EB45	0,10-20	0,10-0,30	0,10-0,30	0,20-0,60	50 (20-80)	-	80 (30-150)
S1	NF/NS-EB45	0,08-0,15	0,10-0,15	0,10-0,20	0,20-0,30	-	15 (8-20)	20 (10-25)
S2	NF/NS-EB45	0,08-0,15	0,10-0,15	0,10-0,20	0,20-0,30	-	15 (8-20)	20 (10-25)
S3	NF/NS-EB45	0,08-0,15	0,10-0,15	0,10-0,20	0,20-0,30	-	15 (8-20)	20 (10-25)
S11	NF/NS-EB45	0,08-0,15	0,10-0,15	0,10-0,20	0,20-0,30	20 (15-30)	30 (15-40)	40 (20-50)
S12	NF/NS-EB45	0,08-0,15	0,10-0,15	0,10-0,20	0,20-0,30	20 (15-30)	30 (15-40)	40 (20-50)
S13	NF/NS-EB45	0,08-0,15	0,10-0,15	0,10-0,20	0,20-0,30	20 (15-30)	30 (15-40)	40 (20-50)
H3	NF/NS-EB45	0,08-0,15	0,10-0,15	0,10-0,20	0,20-0,30	-	-	10 (8-15)
H5	NF/NS-EB45	0,08-0,15	0,10-0,15	0,10-0,20	0,20-0,30	-	-	10 (8-15)
H7	NF/NS-EB45	0,08-0,15	0,10-0,15	0,10-0,20	0,20-0,30	-	-	10 (8-15)
H8	NF/NS-EB45	0,08-0,15	0,10-0,15	0,10-0,20	0,20-0,30	-	-	10 (8-15)
H11	NF/NS-EB45	0,08-0,15	0,10-0,15	0,10-0,20	0,20-0,30	-	-	10 (8-15)
H12	NF/NS-EB45	0,08-0,15	0,10-0,15	0,10-0,20	0,20-0,30	-	-	10 (8-15)
H21	NF/NS-EB45	0,08-0,15	0,10-0,15	0,10-0,20	0,20-0,30	-	-	10 (8-15)
H31	NF/NS-EB45	0,08-0,15	0,10-0,15	0,10-0,20	0,20-0,30	-	-	10 (8-15)
PM1	NF/NS-EB45	0,10-0,15	0,1-0,20	0,10-0,20	0,20-0,50	-	50 (30-80)	70 (40-100)
PM2	NF/NS-EB45	0,10-0,15	0,1-0,20	0,10-0,20	0,20-0,50	-	50 (30-80)	70 (40-100)
PM3	NF/NS-EB45	0,10-0,15	0,1-0,20	0,10-0,20	0,20-0,50	-	50 (30-80)	70 (40-100)
TS1	NF/NS-EB45	0,10-0,15	0,1-0,20	0,10-0,30	0,20-0,60	20 (15-25)	-	40 (20-60)
TS2	NF/NS-EB45	0,10-0,15	0,1-0,20	0,10-0,30	0,20-0,60	20 (15-25)	-	40 (20-60)
TS3	NF/NS-EB45	0,10-0,15	0,1-0,20	0,10-0,30	0,20-0,60	20 (15-25)	-	40 (20-60)
TS4	NF/NS-EB45	0,10-0,15	0,1-0,20	0,10-0,30	0,20-0,60	20 (15-25)	-	40 (20-60)
TP1	NF/NS-EB45	0,10-0,15	0,1-0,20	0,10-0,30	0,20-0,60	20 (15-25)	-	40 (20-60)
TP2	NF/NS-EB45	0,10-0,15	0,1-0,20	0,10-0,30	0,20-0,60	20 (15-25)	-	40 (20-60)
TP3	NF/NS-EB45	0,10-0,15	0,1-0,20	0,10-0,30	0,20-0,60	20 (15-25)	-	40 (20-60)
TP4	NF/NS-EB45	0,10-0,15	0,1-0,20	0,10-0,30	0,20-0,60	20 (15-25)	-	40 (20-60)
GR1	NF/NS-EB45	0,10-0,15	0,1-0,20	0,10-0,30	0,20-0,60	40 (80-20)	-	60 (30-120)

SMG = Seco material group
a_p = mm
f = mm/rev
v_c= m/min
All cutting data are start values

Custom design – No waiting for quotation - Short delivery time

Custom Design is also available for Nanofix reamers and tool holders.
You can now quote for your own intermediate ∅ reamer and tailor made Nanofix tool holder using the Seco Custom Design software.
Easy to use concept: Just indicate component min/max ∅ or use ISO tolerance system available in the software.
Nanofix head designation is created automatically.
Custom Design gives you a number of advantages:

- No waiting for quotation! Price and delivery time is available instantly!
- Directly visualize your needs. No risk for misunderstandings.
- Short delivery time.

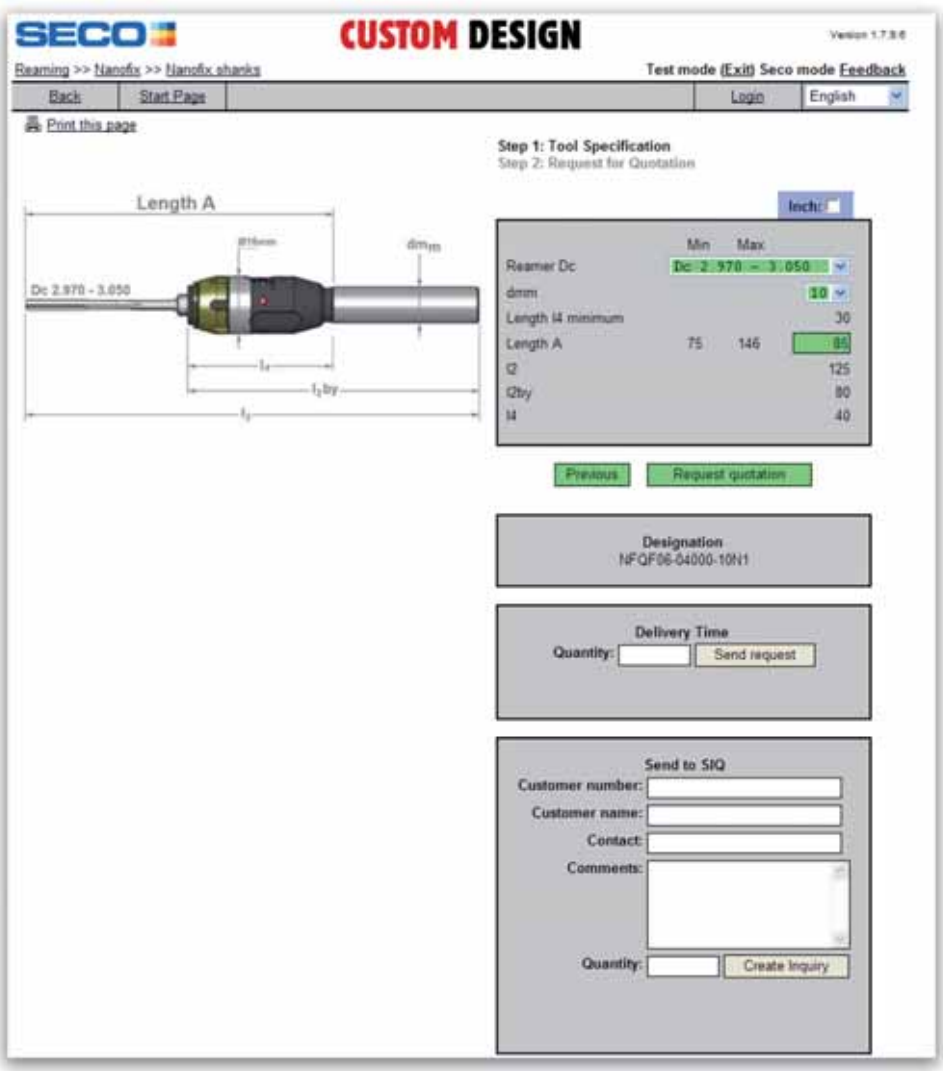

Regrinding instructions

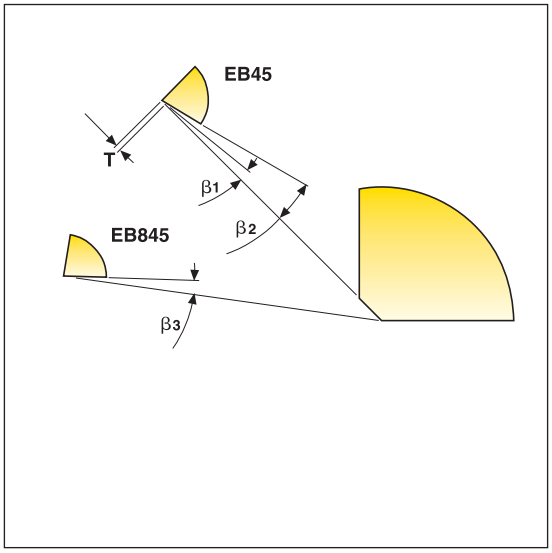

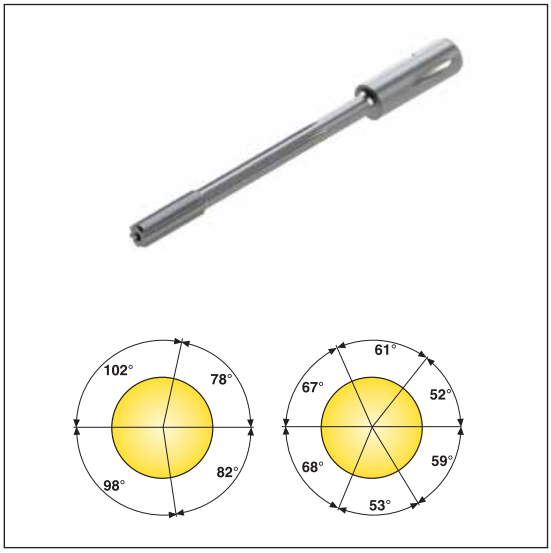

∅ Nanofix	β1	β2	β3	t
2.97-12.050 mm	8°	25°	10°	0.15 mm

Specification:

Diamond grinding wheel
Grain size:
D6 for 1st clearance angle (β1 - β3)
D64 for 2nd clearance angle (β2)

Important

Regrinding reduces reamer diameter
Recoating may produce oversized diameter
Max run-out on lead chamfers 10 µm



Range overview

Bifix®	∅ Range	Reaming depth	Hole tolerance	Intermediate diameters	Surface finish
SR80 For through holes 	5,900–60,500 mm	3–5–7 x D	IT 6-7	Yes , available through Custom Design	R_a 0,2–0,8 µm
SR81 For blind holes 	7,875–60,500 mm	3–5–7 x D	IT 6-7	Yes , available through Custom Design	R_a 0,2–0,8 µm
SR82 For blind holes short version 	7,875–60,500 mm	2–3-5 x D	IT 6-7	Yes , available through Custom Design	R_a 0,2–0,8 µm

Code key - Reamers

Unless requested otherwise, reamers are designed to produce a diameter in the middle of the required tolerance.

Reamer type:
Type 80: Through hole
Type 81: Blind hole
Type 82: Blind hole, short version

Type of lead geometry
EN1, EN2, EN3

SR80 - 16,85 P6 - EN1 - R - 9

Hole diameter and tolerance

Shank type: (to be stated when requested style is not standard)
SR80 and SR81: R1 without flat is standard
SR82: R9 with flat is standard



Code key - Blades

Important: The reamer and the blade must have the same lead geometry.

Blade size:
P00, P0, P1
P2, P4

Cutting rake angle:
0°, 6°, 12°

P2 - EN1 - 06 CP20

Type of lead geometry
EN1, EN2, EN3

Carbide grade:
CP20, H15, CF

Set up and machining data

Rotating tool

Max. run-out recommended: 0,02 mm.
Precision holder is recommended : Hydraulic chuck, D-type collet chuck, 5672 collet chuck or shrink-fit.



Stationary tool

Use a Seco floating holder, see page 469-473.

For optimal chip evacuation

Recommended blade orientation for static tools
(see drawing, view from front of tools).

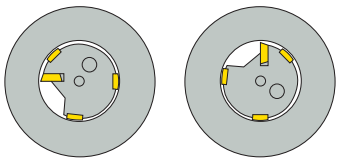

Coolant requirements

To reach maximum tool life and hole quality, the following coolant requirements should be observed.
Coolant through the tool is recommended. External coolant supply can be used if reaming depth < 2 x D.
Quality soluble oil with 40% minimum mineral oil. Neat oil recommended for stainless steel.
Concentration minimum 6–8%.
Filtration 30–50 µm.
Volume min 0,5 l/min/mm in tool diameter. (Ex: Reamer ∅10, min volume is 5 l/min).

Setting fixture

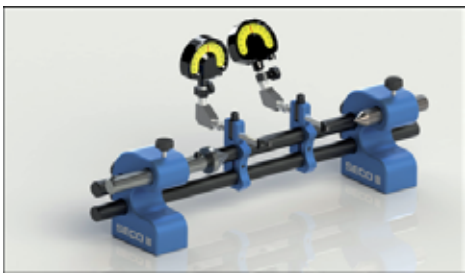

SF-60200-C160C190: Part No. 02885396

- Horizontal stand
- First choice for Ø smaller than 60 mm
- 2 clocks
- Maximum tool Ø: 60,5 mm
- Maximum tool length: 200 mm

Choice of blade – Select a lead geometry

EN1 - General information

Maximum machining allowance on ∅ 0,5 mm.
Surface Finish + (R_a 0,3 - 0,8 µm)

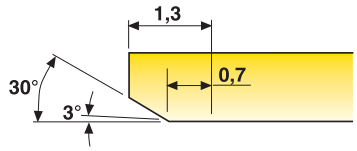

EN2 - Short lead

Maximum machining allowance on ∅ 0,3 mm.
Surface finish (R_a 0,4–1,2 µm).
Maximum feed rate 0,2 mm/rev.
Only to be used when a short lead is required. Designed with end cutting.

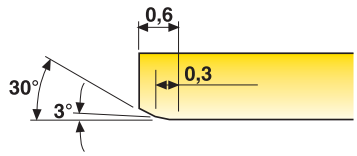

EN3 - Extreme surface finish

Maximum machining allowance on ∅ 0,5 mm.
Surface finish (R_a 0,2–0,6 µm).
Suitable for all materials except aluminium.
To be used when R_a should be < 0,3–0,4 µm.

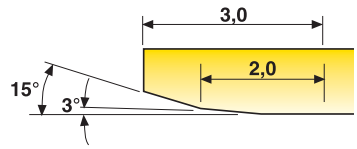

Note that reamer and blade must have the same lead geometry.

Grade and rake angle

Use the tables on page to classify the workpiece material into SMG.
Use the blade and cutting data recommendation table on page 388 to choose grade and rake angle.
The blade programme is on page 389.

For through holes ∅ 6H6–26H6 – Shank type R1, cylindrical without flat



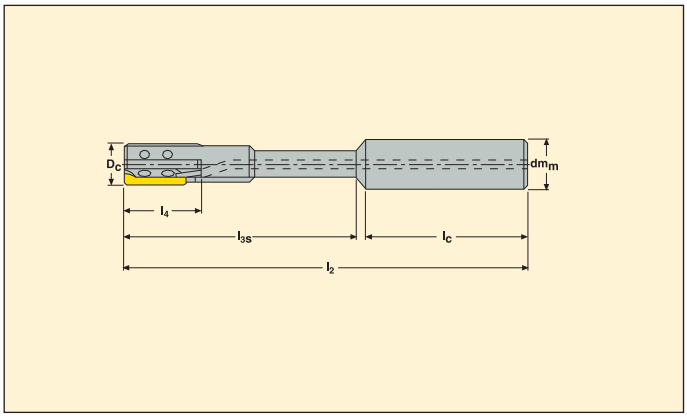

- Blade information on page 389
- Internal through coolant

D_c (mm)	Drill size*	Part No.	Dimensions in mm					Blade size
			l_2	l_c	l_{3s}	l_4	dm_m	
6	5,5/5,9	SR80-6H6-EN1	105	40	62	15	10	P00-EN1-XX
7	6,8/6,9	SR80-7H6-EN1	105	40	63	25	10	P0-EN1-XX
8	7,8/7,9	SR80-8H6-EN1	115	40	73	25	10	P0-EN1-XX
9	8,8/8,9	SR80-9H6-EN1	115	40	73	25	10	P1-EN1-XX
10	9,8/9,9	SR80-10H6-EN1	115	40	74	25	10	P1-EN1-XX
11	10,8/10,9	SR80-11H6-EN1	133	48	81	25	16	P1-EN1-XX
12	11,8/11,908	SR80-12H6-EN1	133	48	81	25	16	P1-EN1-XX
13	12,8/12,9	SR80-13H6-EN1	133	48	81	25	16	P2-EN1-XX
14	13,8/13,891	SR80-14H6-EN1	133	48	81	25	16	P2-EN1-XX
15	14,8/14,9	SR80-15H6-EN1	133	48	82	25	16	P2-EN1-XX
16	15,8/15,9	SR80-16H6-EN1	133	48	82	25	16	P2-EN1-XX
17	16,8/16,9	SR80-17H6-EN1	155	50	100	25	20	P2-EN1-XX
18	17,8/17,9	SR80-18H6-EN1	155	50	100	25	20	P2-EN1-XX
19	18,8/18,9	SR80-19H6-EN1	155	50	100	25	20	P2-EN1-XX
20	19,8/19,9	SR80-20H6-EN1	155	50	100	30	20	P4-EN1-XX
21	20,8/20,9	SR80-21H6-EN1	191	56	128	30	25	P4-EN1-XX
22	21,8/21,9	SR80-22H6-EN1	191	56	129	30	25	P4-EN1-XX
23	22,8/22,9	SR80-23H6-EN1	191	56	129	30	25	P4-EN1-XX
24	23,813/23,9	SR80-24H6-EN1	191	56	129	30	25	P4-EN1-XX
25	24,8/24,9	SR80-25H6-EN1	191	56	129	30	25	P4-EN1-XX
26	25,8/25,9	SR80-26H6-EN1	191	56	129	30	25	P4-EN1-XX

Spare Parts

For drill dia (mm)	Clamp	Clamp screw	Support ball	Adjusting screw	Setting key	Torque key*	Torque value
6	SR-B02	M2T	BB1,5	SH2020	T06P-2+0,9 SMS795	-	-
7-8	SR-B0	LH2040	BB1,5	SH2020	0,9 SMS795	-	-
9	SR-B1	LH2540	BB2,0	SH2525	1,3 SMS795	H00-1305	0,5 Nm
10-12	SR-B2	LH2540	BB2,0	SH2525	1,3 SMS795	H00-1305	0,5 Nm
13-19	SR-B3	LH3050	BB2,5	SH3040	1,5 SMS795	H00-1509	0,9 Nm
20-60	SR-B5	LH4010	BB3,0	SH4060	2,0 SMS795	H00-2020	2,0 Nm

For further information on which drill to use and how to use it see page 9.

* Including blade.

For through holes ∅ 27H6-60H6 – Shank type R1, cylindrical without flat



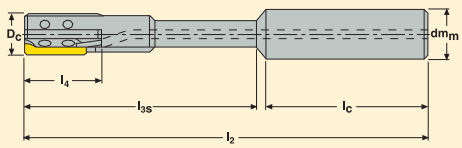

- Blade information on page 389
- Internal through coolant

D_c (mm)	Part No.	Dimensions in mm					Blade size
		l_2	l_c	l_{3s}	l_4	dm_m	
27	**SR80-27H6-EN1**	221	56	159	30	25	P4-EN1-XX
28	**SR80-28H6-EN1**	221	56	159	30	25	P4-EN1-XX
29	**SR80-29H6-EN1**	221	56	159	30	25	P4-EN1-XX
30	**SR80-30H6-EN1**	221	56	159	30	25	P4-EN1-XX
31	**SR80-31H6-EN1**	221	56	160	30	25	P4-EN1-XX
32	**SR80-32H6-EN1**	221	56	160	30	25	P4-EN1-XX
34	**SR80-34H6-EN1**	226	56	165	30	25	P4-EN1-XX
35	**SR80-35H6-EN1**	226	56	165	30	25	P4-EN1-XX
36	**SR80-36H6-EN1**	226	56	166	30	25	P4-EN1-XX
38	**SR80-38H6-EN1**	226	56	166	30	25	P4-EN1-XX
40	**SR80-40H6-EN1**	226	56	166	30	25	P4-EN1-XX
42	**SR80-42H6-EN1**	226	56	167	30	25	P4-EN1-XX
44	**SR80-44H6-EN1**	226	56	167	30	25	P4-EN1-XX
48	**SR80-48H6-EN1**	226	56	168	30	25	P4-EN1-XX
50	**SR80-50H6-EN1**	226	56	168	30	25	P4-EN1-XX
52	**SR80-52H6-EN1**	226	56	169	30	25	P4-EN1-XX
54	**SR80-54H6-EN1**	226	56	169	30	25	P4-EN1-XX
58	**SR80-58H6-EN1**	226	56	169	30	25	P4-EN1-XX
60	**SR80-60H6-EN1**	226	56	169	30	25	P4-EN1-XX

Spare Parts

For drill dia (mm)	Clamp	Clamp screw	Support ball	Adjusting screw	Setting key	Torque key*	Torque value
20-60	SR-B5	LH4010	BB3,0	SH4060	2,0 SMS795	H00-2020	2,0 Nm

For further information on which drill to use and how to use it see page 9.
* Including blade.

For through holes – Intermediate range – Shank type R1, cylindrical without flat



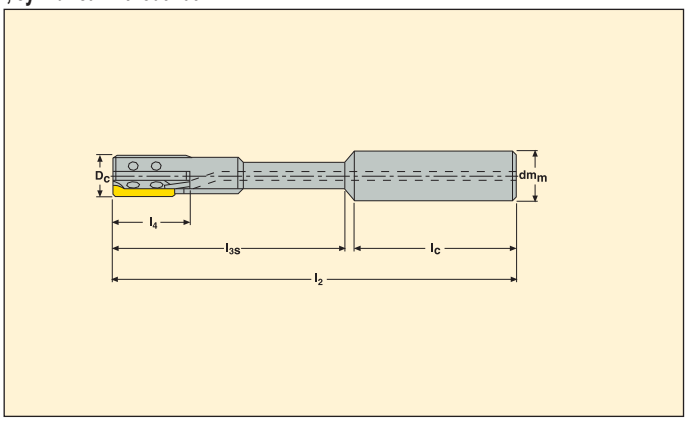

- Blade information on page 389
- Important! Reamer and blade must have the same lead geometry
- For choice of lead geometry EN1, EN2 or EN3 see page 380

D_c (mm)	Part No.	Dimensions in mm					Blade size
		l_2	l_c	l_{3s}	l_4	dm_m	
5,900-6,874	**SR80-x.xxx-EN**	105	40	62	15	10	P00-EN-XX
6,875-7,874	**SR80-x.xxx-EN**	105	40	63	15	10	P0-EN-XX
7,875-8,749	**SR80-x.xxx-EN**	115	40	73	25	10	P0-EN-XX
8,750-10,749	**SR80-x.xxx-EN**	115	40	73	25	10	P1-EN-XX
10,750-12,749	**SR80-xx.xxx-EN**	133	48	81	25	16	P1-EN-XX
12,750-16,749	**SR80-xx.xxx-EN**	133	48	81	25	16	P2-EN-XX
16,750-19,499	**SR80-xx.xxx-EN**	155	50	100	25	20	P2-EN-XX
19,500-20,499	**SR80-xx.xxx-EN**	155	50	100	30	20	P4-EN-XX
20,500-26,499	**SR80-xx.xxx-EN**	191	56	129	30	25	P4-EN-XX
26,500-32,499	**SR80-xx.xxx-EN**	221	56	160	30	25	P4-EN-XX
32,500-38,499	**SR80-xx.xxx-EN**	226	56	165	30	25	P4-EN-XX
38,500-40,499	**SR80-xx.xxx-EN**	226	56	166	30	25	P4-EN-XX
40,500-44,499	**SR80-xx.xxx-EN**	226	56	167	30	25	P4-EN-XX
44,500-50,499	**SR80-xx.xxx-EN**	226	56	168	30	25	P4-EN-XX
50,500-60,500	**SR80-xx.xxx-EN**	226	56	169	30	25	P4-EN-XX

Spare Parts

For ∅ (mm)	Clamp	Clamp screw	Support ball	Adjusting screw	Setting key	Torque key*
5,900-6,299	SR-B02	M2T	BB1,5	SH2020	T06P-2+0,9 SMS795	–
6,300-6,874	SR-B01	M2T	BB1,5	SH2020	T06P-2+0,9 SMS795	–
6,875-8,749	SR-B0	LH2040	BB1,5	SH2020	0,9 SMS795	–
8,750-9,749	SR-B1	LH2540	BB2,0	SH2525	1,3 SMS795	H00-1305
9,750-12,749	SR-B2	LH2540	BB2,0	SH2525	1,3 SMS795	H00-1305
12,750-19,499	SR-B3	LH3050	BB2,5	SH3040	1,5 SMS795	H00-1509
19,500-60,500	SR-B5	LH4010	BB3,0	SH4060	2,0 SMS795	H00-2020

Note! When ordering reamers for intermediate diameter, please state: ∅ and tolerance of bore to be reamed, lead geometry (EN1, EN2 or EN3).
Ordering example: SR80-11.50 H7-EN2, P1-EN2-06, CP20.
*Including blade

For blind holes ∅ 8H6–26H6 – Shank type R1, cylindrical without flat



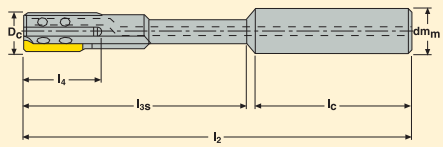

- Blade information on page 389
- Internal through coolant

D_c (mm)	Drill size*	Part No.	Dimensions in mm					Blade size
			l_2	l_c	l_{3s}	l_4	dm_m	
8	7,8/7,9	SR81-8H6-EN1	115	40	73	25	10	P0-EN1-XX
9	8,8/8,9	SR81-9H6-EN1	115	40	73	25	10	P1-EN1-XX
10	9,8/9,9	SR81-10H6-EN1	115	40	74	25	10	P1-EN1-XX
11	10,8/10,9	SR81-11H6-EN1	133	48	81	25	16	P1-EN1-XX
13	12,8/12,9	SR81-13H6-EN1	133	48	81	25	16	P2-EN1-XX
14	13,8/13,891	SR81-14H6-EN1	133	48	81	25	16	P2-EN1-XX
15	14,8/14,9	SR81-15H6-EN1	133	48	82	25	16	P2-EN1-XX
16	15,8/15,9	SR81-16H6-EN1	133	48	82	25	16	P2-EN1-XX
17	16,8/16,9	SR81-17H6-EN1	155	50	100	25	20	P2-EN1-XX
18	17,8/17,9	SR81-18H6-EN1	155	50	100	25	20	P2-EN1-XX
19	18,8/18,9	SR81-19H6-EN1	155	50	100	25	20	P2-EN1-XX
20	19,8/19,9	SR81-20H6-EN1	155	50	100	30	20	P4-EN1-XX
21	20,8/20,9	SR81-21H6-EN1	191	56	128	30	25	P4-EN1-XX
22	21,8/21,9	SR81-22H6-EN1	191	56	129	30	25	P4-EN1-XX
23	22,8/22,9	SR81-23H6-EN1	191	56	129	30	25	P4-EN1-XX
24	23,813/23,9	SR81-24H6-EN1	191	56	129	30	25	P4-EN1-XX
25	24,8/24,9	SR81-25H6-EN1	191	56	129	30	25	P4-EN1-XX
26	25,8/25,9	SR81-26H6-EN1	191	56	129	30	25	P4-EN1-XX

Spare Parts

For drill dia (mm)	Clamp	Clamp screw	Support ball	Adjusting screw	Setting key	Torque key*	Torque value
8	SR-B0	LH2040	BB1,5	SH2020	0,9 SMS795	–	–
9	SR-B1	LH2540	BB2,0	SH2525	1,3 SMS795	H00-1305	0,5 Nm
10-12	SR-B2	LH2540	BB2,0	SH2525	1,3 SMS795	H00-1305	0,5 Nm
13-19	SR-B3	LH3050	BB2,5	SH3040	1,5 SMS795	H00-1509	0,9 Nm
20-60	SR-B5	LH4010	BB3,0	SH4060	2,0 SMS795	H00-2020	2,0 Nm

For further information on which drill to use and how to use it see page 9.

* Including blade.

For blind holes ∅27H6–60H6 – Shank type R1, cylindrical without flat



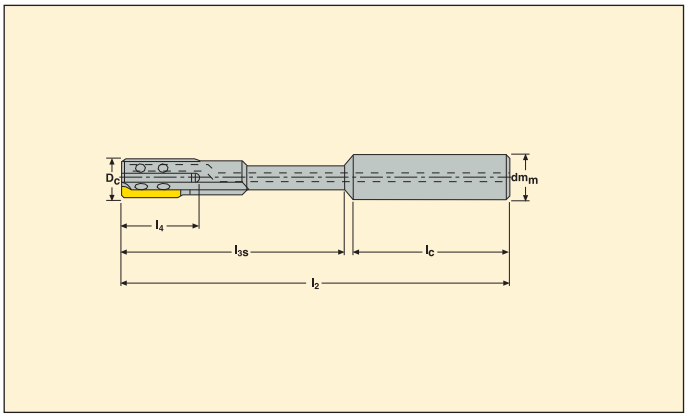

- Blade information on page 389
- Internal through coolant

D_c (mm)	Part No.	Dimensions in mm					Blade size
		l_2	l_c	l_{3s}	l_4	dm_m	
27	SR81-27H6-EN1	221	56	159	30	25	P4-EN1-XX
28	SR81-28H6-EN1	221	56	159	30	25	P4-EN1-XX
29	SR81-29H6-EN1	221	56	159	30	25	P4-EN1-XX
30	SR81-30H6-EN1	221	56	159	30	25	P4-EN1-XX
31	SR81-31H6-EN1	221	56	160	30	25	P4-EN1-XX
32	SR81-32H6-EN1	221	56	160	30	25	P4-EN1-XX
34	SR81-34H6-EN1	226	56	165	30	25	P4-EN1-XX
35	SR81-35H6-EN1	226	56	165	30	25	P4-EN1-XX
36	SR81-36H6-EN1	226	56	166	30	25	P4-EN1-XX
38	SR81-38H6-EN1	226	56	166	30	25	P4-EN1-XX
40	SR81-40H6-EN1	226	56	166	30	25	P4-EN1-XX
42	SR81-42H6-EN1	226	56	167	30	25	P4-EN1-XX
44	SR81-44H6-EN1	226	56	167	30	25	P4-EN1-XX
48	SR81-48H6-EN1	226	56	168	30	25	P4-EN1-XX
50	SR81-50H6-EN1	226	56	168	30	25	P4-EN1-XX
52	SR81-52H6-EN1	226	56	169	30	25	P4-EN1-XX
54	SR81-54H6-EN1	226	56	169	30	25	P4-EN1-XX
58	SR81-58H6-EN1	226	56	169	30	25	P4-EN1-XX
60	SR81-60H6-EN1	226	56	169	30	25	P4-EN1-XX

Spare Parts

For drill dia (mm)	Clamp	Clamp screw	Support ball	Adjusting screw	Setting key	Torque key*	Torque value
20-60	SR-B5	LH4010	BB3,0	SH4060	2,0 SMS795	H00-2020	2,0 Nm

For further information on which drill to use and how to use it see page 9.

* Including blade.

For blind holes – Intermediate range – Shank type R1, cylindrical without flat



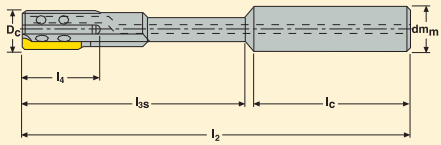

- Blade information on page 389
- Important! Reamer and blade must have the same lead geometry
- For choice of lead geometry EN1, EN2 or EN3 see page 380

D_c (mm)	Part No.	Dimensions in mm					Blade size
		l_2	l_c	l_{3s}	l_4	dm_m	
7,875-8,749	**SR81-x.xxx-EN**	115	40	73	25	10	P00-EN-XX
8,750-10,749	**SR81-x.xxx-EN**	115	40	73	25	10	P1-EN-XX
10,750-12,749	**SR81-x.xxx-EN**	133	48	81	25	16	P1-EN-XX
12,750-16,749	**SR81-x.xxx-EN**	133	48	81	25	16	P2-EN-XX
16,750-19,499	**SR81-x.xxx-EN**	155	50	100	25	20	P2-EN-XX
19,500-20,499	**SR81-x.xxx-EN**	155	50	100	30	20	P4-EN-XX
20,500-26,499	**SR81-x.xxx-EN**	191	56	129	30	25	P4-EN-XX
26,500-32,499	**SR81-x.xxx-EN**	221	56	160	30	25	P4-EN-XX
32,500-38,499	**SR81-x.xxx-EN**	226	56	165	30	25	P4-EN-XX
38,500-40,499	**SR81-x.xxx-EN**	226	56	166	30	25	P4-EN-XX
40,500-44,499	**SR81-x.xxx-EN**	226	56	167	30	25	P4-EN-XX
44,500-50,499	**SR81-x.xxx-EN**	226	56	168	30	25	P4-EN-XX
50,500-60,500	**SR81-x.xxx-EN**	226	56	169	30	25	P4-EN-XX

Spare Parts

For ∅ (mm)	Clamp	Clamp screw	Support ball	Adjusting screw	Setting key	Torque key*	
7,875-8,749	SR-B0	LH2040	BB1,5	SH2020	0,9 SMS795	-	
8,750-9,749	SR-B1	LH2540	BB2,0	SH2525	1,3 SMS795	H00-1305	
9,750-12,749	SR-B2	LH2540	BB2,0	SH2525	1,3 SMS795	H00-1305	
12,750-19,499	SR-B3	LH3050	BB2,5	SH3040	1,5 SMS795	H00-1509	
19,500-60,500	SR-B5	LH4010	BB3,0	SH4060	2,0 SMS795	H00-2020	

Note! When ordering reamers for intermediate diameter, please state: ∅ and tolerance of bore to be reamed, lead geometry (EN1, EN2 or EN3).
Ordering example: SR81-11.50 H7-EN2, P1-EN2-06, CP20.
* Including blade

For blind holes – Short range for turning applications – Shank type R9, cylindrical without flat



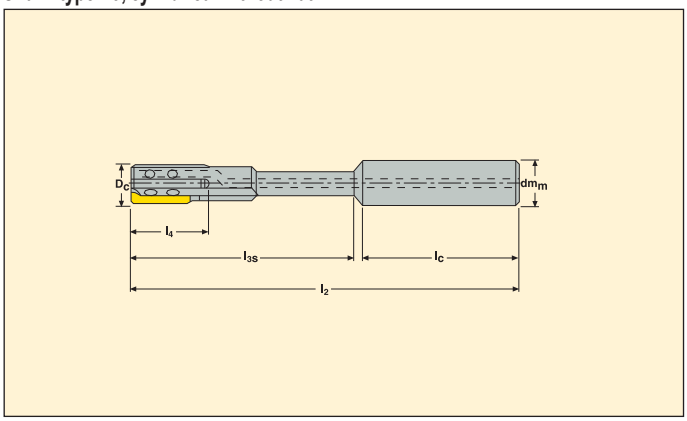

- Blade information on page 389
- Important! Reamer and blade must have the same lead geometry
- For choice of lead geometry EN1, EN2 or EN3 see page 380

D_c (mm)	Part No.	Dimensions in mm					Blade size
		l_2	l_c	l_{3s}	l_4	dm_m	
7,875-8,749	**SR82-x.xxx-EN**	95	40	53	25	10	P00-EN-XX
8,750-10,749	**SR82-x.xxx-EN**	95	40	53	25	10	P1-EN-XX
10,750-12,749	**SR82-x.xxx-EN**	113	48	61	25	16	P1-EN-XX
12,750-16,749	**SR82-x.xxx-EN**	113	48	61	25	16	P2-EN-XX
16,750-19,499	**SR82-x.xxx-EN**	115	50	60	25	20	P2-EN-XX
19,500-20,499	**SR82-x.xxx-EN**	115	50	60	30	20	P4-EN-XX
20,500-32,499	**SR82-x.xxx-EN**	151	56	89	30	25	P4-EN-XX
32,500-36,499	**SR82-x.xxx-EN**	166	56	105	30	25	P4-EN-XX
36,500-40,499	**SR82-x.xxx-EN**	166	56	106	30	25	P4-EN-XX
40,500-44,499	**SR82-x.xxx-EN**	166	56	107	30	25	P4-EN-XX
44,500-50,499	**SR82-x.xxx-EN**	166	56	108	30	25	P4-EN-XX
50,500-60,500	**SR82-x.xxx-EN**	166	56	109	30	25	P4-EN-XX

Spare Parts

For ∅ (mm)	Clamp	Clamp screw	Support ball	Adjusting screw	Setting key	Torque key*
7,875-8,749	SR-B0	LH2040	BB1,5	SH2020	0,9 SMS795	–
8,750-9,749	SR-B1	LH2540	BB2,0	SH2525	1,3 SMS795	H00-1305
9,750-12,749	SR-B2	LH2540	BB2,0	SH2525	1,3 SMS795	H00-1305
12,750-19,499	SR-B3	LH3050	BB2,5	SH3040	1,5 SMS795	H00-1509
19,500-60,500	SR-B5	LH4010	BB3,0	SH4060	2,0 SMS795	H00-2020

Note! When ordering reamers for intermediate diameter, please state: ∅ and tolerance of bore to be reamed, lead geometry (EN1, EN2 or EN3)
Ordering example: SR82-11.50 H7EN2, P1-EN2-06, CP20
* Including blade

Optimization/Grades

Use the blade selection table to choose alternative blades for higher productivity or better security

Blade size	Steel	Stainless steel	Cast iron	Non-ferrous	Aluminium	Wear resistance ⟷ Toughness			Part No.	
						Productivity	Versatility	Security	Blade	Grade
P00, P0, P1, P2, P4										
			•	•				X	Pxx-ENx-00	H15
	•		•		•			X	Pxx-ENx-06	H15
		•		•	•			X	Pxx-ENx-12	H15
	•					X			Pxx-ENx-00	CP20
	•		•				X		Pxx-ENx-06	CP20
	•	•					X		Pxx-ENx-12	CP20
	•		•			X			Pxx-ENx-00	CP15
	•		•			X			Pxx-ENx-06	CP15
	•	•		•	•	X			Pxx-ENx-12	CP15
	•		•			X			Pxx-ENx-06	CF

Grades

	CF	**Cermet** A wear resistant grade for performance optimization in steel.
	CP15	**Coated** A wear-resistant coated grade alternative to CP20. For optimization in cast iron and steels. Also suitable for non-ferrous. Ti(C, N)
	CP20	**Coated** A versatile coated grade suitable for most materials, except aluminium. TiN
	H15	**Uncoated** A tough micrograin grade for all materials. Suitable for fine-reaming operations due to edge sharpness.

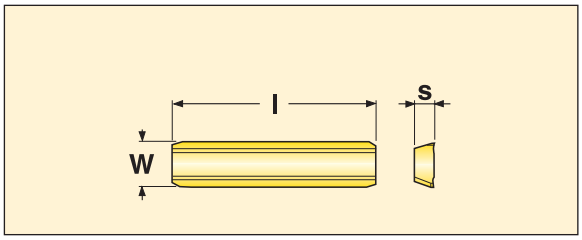

Size	Dimensions in mm		
	W	l	s
P0	2,5	20	1,2
P00	1,5	11	1
P1	3	20	1,5
P2	4,5	20	2
P4	7	25	2,3

		Grades			
		H15	CP15	CP20	CF
P00					
	P00 -EN1-0	□	□	■	
	-EN1-06	■	□	■	□
	-EN1-12	■	□	■	
	-EN2-0	□	□	□	
	-EN2-06	□	□	■	□
	-EN2-12	□	□	■	
	-EN3-0	□	□	□	
	-EN3-06	□	□	■	
	-EN3-12	□	□	□	
P0					
	P0- EN1-0	□	□	■	
	EN1-06	□	□	■	□
	EN1-12	■	□	■	
	EN2-0	□	□	□	
	EN2-06	□	□	■	□
	EN2-12	□	□	■	
	EN3-0	□	□	□	
	EN3-06	□	□		
	EN3-12	□	□	□	
P1					
	P1- EN1-0	□	□	■	
	EN1-06	■	□	■	□
	EN1-12	■	□	■	
	EN2-0	□	□	□	
	EN2-06	□	□	■	□
	EN2-12	□	□	■	
	EN3-0	□	□	□	
	EN3-06	□	□	■	
	EN3-12	□	□	□	
P2					
	P2- EN1-0	□	□	■	
	EN1-06	■	□	■	□
	EN1-12	■	□	■	
	EN2-0	□	□	□	
	EN2-06	□	□	■	□
	EN2-12	□	□	■	
	EN3-0	□	□	□	
	EN3-06	□	□		
	EN3-12	□	□	□	
P4					
	P4- EN1-0	□	□	■	
	EN1-06	■	□	■	□
	EN1-12	■	□	■	
	EN2-0	□	□	□	
	EN2-06	□	□	■	□
	EN2-12	□	□	■	
	EN3-0	□	□	□	
	EN3-06	□	□	■	
	EN3-12	□	□	□	

■ Stock standard, □ = Non stock standard. Subject to change refer to current price- and stock-list.

Custom design – No waiting for quotation – Short delivery time

Custom Design is also available for Bifix reamers and tool holders.
You can now quote for your own intermediate ∅ reamer and tailor made Bifix tool holder using the Seco Custom Design software.
Easy to use concept: Just indicate component min/max ∅ or use ISO tolerance system available in the software.
Bifix head designation is created automatically.
Custom Design gives you a number of advantages:

- No waiting for quotation! Price and delivery time is available instantly!
- Directly visualize your needs. No risk for misunderstandings.
- Short delivery time.

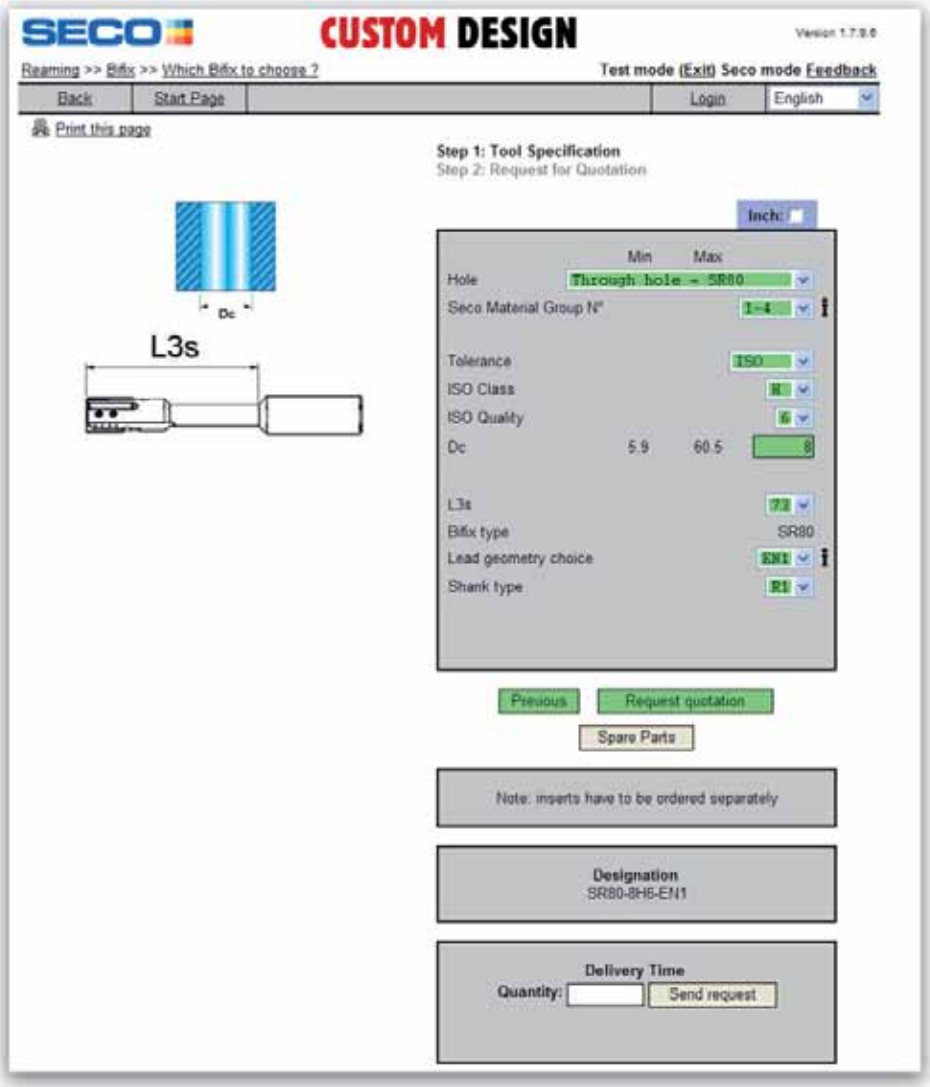

Cutting data – Pxx-EN1/EN2-00

SMG		a_p (Ø)		f	V_c	
		Ø < 9	Ø ≥ 9		CP20	CP15
P5	Pxx-EN1/EN2-00	0,10-0,15	0,10-0,20	0,10-0,30	40((30-50)	-
P6	Pxx-EN1/EN2-00	0,10-0,15	0,10-0,20	0,10-0,30	40((30-50)	-
P7	Pxx-EN1/EN2-00	0,10-0,15	0,10-0,20	0,10-0,30	40((30-50)	-
K1	Pxx-EN1/EN2-00	0,10-0,20	0,10-0,30	0,10-0,30	90 (80-100)	120 (80-150)
K2	Pxx-EN1/EN2-00	0,10-0,20	0,10-0,30	0,10-0,30	35 (25-50)	50 (25-70)
K3	Pxx-EN1/EN2-00	0,10-0,20	0,10-0,30	0,10-0,30	90 (80-100)	120 (80-150)
K4	Pxx-EN1/EN2-00	0,10-0,20	0,10-0,30	0,10-0,30	70 (60-80)	90 (80-100)
K5	Pxx-EN1/EN2-00	0,10-0,20	0,10-0,30	0,10-0,30	70 (60-80)	90 (80-100)
K6	Pxx-EN1/EN2-00	0,10-0,20	0,10-0,30	0,10-0,30	90 (80-100)	120 (80-150)
K7	Pxx-EN1/EN2-00	0,10-0,20	0,10-0,30	0,10-0,30	90 (80-100)	120 (80-150)
PM1	Pxx-EN1/EN2-00	0,10-0,20	0,10-0,30	0,10-0,30	50 (25-70)	-
PM2	Pxx-EN1/EN2-00	0,10-0,20	0,10-0,30	0,10-0,30	50 (25-70)	-
PM3	Pxx-EN1/EN2-00	0,10-0,20	0,10-0,30	0,10-0,30	50 (25-70)	-

Cutting data – Pxx-EN1/EN2-06

SMG		a_p (Ø)		f	V_c			
		Ø < 9	Ø ≥ 9		H15	CP20	CP15	CF
P1	Pxx-EN1/EN2-06	0,10-0,15	0,10-0,20	0,10-0,30	40 (30-60)	105 (90-120)	120 (90-150)	200 (100-300)
P2	Pxx-EN1/EN2-06	0,10-0,15	0,10-0,20	0,10-0,30	40 (30-60)	105 (90-120)	120 (90-150)	200 (100-300)
P3	Pxx-EN1/EN2-06	0,10-0,15	0,10-0,20	0,10-0,30	40 (30-60)	105 (90-120)	120 (90-150)	200 (100-300)
P4	Pxx-EN1/EN2-06	0,10-0,15	0,10-0,20	0,10-0,30	35 (25-40)	60 (40-70)	80 (60-100)	150 (100-200)
P5	Pxx-EN1/EN2-06	0,10-0,15	0,10-0,20	0,10-0,30	35 (25-40)	60 (40-70)	80 (60-100)	150 (100-200)
P6	Pxx-EN1/EN2-06	0,10-0,15	0,10-0,20	0,10-0,30	35 (25-40)	60 (40-70)	80 (60-100)	150 (100-200)
P7	Pxx-EN1/EN2-06	0,10-0,15	0,10-0,20	0,10-0,30	35 (25-40)	60 (40-70)	80 (60-100)	150 (100-200)
P8	Pxx-EN1/EN2-06	0,10-0,15	0,10-0,20	0,10-0,30	30 (25-40)	50 (30-60)	60 (40-70)	150 (100-200)
P11	Pxx-EN1/EN2-06	0,10-0,15	0,10-0,20	0,10-0,30	30 (25-40)	50 (30-60)	60 (40-70)	-
M1	Pxx-EN1/EN2-06	0,10-0,15	0,10-0,20	0,10-0,30	25 (20-30)	35 (25-40)	35 (25-40)	-
M2	Pxx-EN1/EN2-06	0,10-0,15	0,10-0,20	0,10-0,30	25 (20-30)	35 (25-40)	35 (25-40)	-
M3	Pxx-EN1/EN2-06	0,10-0,15	0,10-0,20	0,10-0,30	25 (20-30)	35 (25-40)	35 (25-40)	-
M4	Pxx-EN1/EN2-06	0,10-0,15	0,10-0,20	0,10-0,30	20 (15-30)	30 (25-40)	30 (25-40)	-
M5	Pxx-EN1/EN2-06	0,10-0,15	0,10-0,20	0,10-0,30	20 (15-30)	30 (25-40)	30 (25-40)	-
K1	Pxx-EN1/EN2-06	0,10-0,20	0,10-0,30	0,10-0,30	-	90 (80-100)	120 (80-150)	-
K2	Pxx-EN1/EN2-06	0,10-0,20	0,10-0,30	0,10-0,30	-	35 (25-50)	50 (25-70)	-
K3	Pxx-EN1/EN2-06	0,10-0,20	0,10-0,30	0,10-0,30	-	90 (80-100)	120 (80-150)	-
K4	Pxx-EN1/EN2-06	0,10-0,20	0,10-0,30	0,10-0,30	-	70 (60-80)	90 (80-100)	150 (100-200)
K5	Pxx-EN1/EN2-06	0,10-0,20	0,10-0,30	0,10-0,30	-	70 (60-80)	90 (80-100)	150 (100-200)
K6	Pxx-EN1/EN2-06	0,10-0,20	0,10-0,30	0,10-0,30	-	90 (80-100)	120 (80-150)	-
K7	Pxx-EN1/EN2-06	0,10-0,20	0,10-0,30	0,10-0,30	-	90 (80-100)	120 (80-150)	-
N1	Pxx-EN1/EN2-06	0,10-0,30	0,20-0,50	0,10-0,30	65 (50-150)	90 (70-150)	-	-
N2	Pxx-EN1/EN2-06	0,10-0,30	0,20-0,50	0,10-0,30	65 (50-150)	90 (70-150)	-	-
N3	Pxx-EN1/EN2-06	0,10-0,30	0,20-0,50	0,10-0,30	65 (50-150)	90 (70-150)	-	-
N11	Pxx-EN1/EN2-06	0,10-0,30	0,20-0,50	0,10-0,30	65 (50-150)	90 (70-150)	-	-
S1	Pxx-EN1/EN2-06	0,10-0,15	0,10-0,20	0,10-0,30	-	25 (15-30)	-	-
S2	Pxx-EN1/EN2-06	0,10-0,15	0,10-0,20	0,10-0,30	-	25 (15-30)	-	-
S3	Pxx-EN1/EN2-06	0,10-0,15	0,10-0,20	0,10-0,30	-	25 (15-30)	-	-
PM1	Pxx-EN1/EN2-06	0,10-0,20	0,10-0,30	0,10-0,30	-	50 (25-70)	-	-
PM2	Pxx-EN1/EN2-06	0,10-0,20	0,10-0,30	0,10-0,30	-	50 (25-70)	-	-
PM3	Pxx-EN1/EN2-06	0,10-0,20	0,10-0,30	0,10-0,30	-	50 (25-70)	-	-

SMG = Seco material group
a_p = mm
f = mm/rev
v_c= m/min
All cutting data are start values

Cutting data – Pxx-EN1/EN2-12

SMG		a_p (Ø)		f	V_c		
		Ø < 9	Ø ≥ 9		H15	CP20	CP15
P1	Pxx-EN1/EN2-12	0,10-0,15	0,10-0,20	0,10-0,30	40 (30-60)	105 (90-120)	120 (90-150)
P2	Pxx-EN1/EN2-12	0,10-0,15	0,10-0,20	0,10-0,30	40 (30-60)	105 (90-120)	120 (90-150)
P3	Pxx-EN1/EN2-12	0,10-0,15	0,10-0,20	0,10-0,30	40 (30-60)	105 (90-120)	120 (90-150)
P4	Pxx-EN1/EN2-12	0,10-0,15	0,10-0,20	0,10-0,30	35 (25-40)	60 (40-70)	80 (60-100)
P5	Pxx-EN1/EN2-12	0,10-0,15	0,10-0,20	0,10-0,30	35 (25-40)	60 (40-70)	80 (60-100)
P6	Pxx-EN1/EN2-12	0,10-0,15	0,10-0,20	0,10-0,30	35 (25-40)	60 (40-70)	80 (60-100)
P7	Pxx-EN1/EN2-12	0,10-0,15	0,10-0,20	0,10-0,30	35 (25-40)	60 (40-70)	80 (60-100)
P8	Pxx-EN1/EN2-12	0,10-0,15	0,10-0,20	0,10-0,30	30 (25-40)	50 (30-60)	60 (40-70)
P11	Pxx-EN1/EN2-12	0,10-0,15	0,10-0,20	0,10-0,30	30 (25-40)	50 (30-60)	60 (40-70)
M1	Pxx-EN1/EN2-12	0,10-0,15	0,10-0,20	0,10-0,30	25 (20-30)	35 (25-40)	35 (25-40)
M2	Pxx-EN1/EN2-12	0,10-0,15	0,10-0,20	0,10-0,30	25 (20-30)	35 (25-40)	35 (25-40)
M3	Pxx-EN1/EN2-12	0,10-0,15	0,10-0,20	0,10-0,30	25 (20-30)	35 (25-40)	35 (25-40)
M4	Pxx-EN1/EN2-12	0,10-0,15	0,10-0,20	0,10-0,30	20 (15-30)	30 (25-40)	30 (25-40)
M5	Pxx-EN1/EN2-12	0,10-0,15	0,10-0,20	0,10-0,30	20 (15-30)	30 (25-40)	30 (25-40)
K1	Pxx-EN1/EN2-12	0,10-0,20	0,10-0,30	0,10-0,30	-	90 (80-100)	-
K3	Pxx-EN1/EN2-12	0,10-0,20	0,10-0,30	0,10-0,30	-	90 (80-100)	-
K4	Pxx-EN1/EN2-12	0,10-0,20	0,10-0,30	0,10-0,30	-	70 (60-80)	-
K5	Pxx-EN1/EN2-12	0,10-0,20	0,10-0,30	0,10-0,30	-	70 (60-80)	-
N1	Pxx-EN1/EN2-12	0,10-0,30	0,20-0,50	0,10-0,30	65 (50-150)	90 (70-150)	-
N2	Pxx-EN1/EN2-12	0,10-0,30	0,20-0,50	0,10-0,30	65 (50-150)	90 (70-150)	-
N3	Pxx-EN1/EN2-12	0,10-0,30	0,20-0,50	0,10-0,30	65 (50-150)	90 (70-150)	-
N11	Pxx-EN1/EN2-12	0,10-0,30	0,20-0,50	0,10-0,30	65 (50-150)	90 (70-150)	-
S1	Pxx-EN1/EN2-12	0,10-0,15	0,10-0,20	0,10-0,30	-	25 (15-30)	-
S2	Pxx-EN1/EN2-12	0,10-0,15	0,10-0,20	0,10-0,30	-	25 (15-30)	-
S3	Pxx-EN1/EN2-12	0,10-0,15	0,10-0,20	0,10-0,30	-	25 (15-30)	-
PM1	Pxx-EN1/EN2-12	0,10-0,20	0,10-0,30	0,10-0,30	-	50 (25-70)	-
PM2	Pxx-EN1/EN2-12	0,10-0,20	0,10-0,30	0,10-0,30	-	50 (25-70)	-
PM3	Pxx-EN1/EN2-12	0,10-0,20	0,10-0,30	0,10-0,30	-	50 (25-70)	-

Cutting data – Pxx-EN3-00

SMG		a_p (Ø)		f	V_c	
		Ø < 9	Ø ≥ 9		CP20	CP15
P5	Pxx-EN3-00	0,10-0,15	0,10-0,20	0,10-0,30	40((30-50)	-
P6	Pxx-EN3-00	0,10-0,15	0,10-0,20	0,10-0,30	40((30-50)	-
P7	Pxx-EN3-00	0,10-0,15	0,10-0,20	0,10-0,30	40((30-50)	-
K1	Pxx-EN3-00	0,10-0,20	0,10-0,30	0,10-0,30	90 (80-100)	120 (80-150)
K2	Pxx-EN3-00	0,10-0,20	0,10-0,30	0,10-0,30	35 (25-50)	50 (25-70)
K3	Pxx-EN3-00	0,10-0,20	0,10-0,30	0,10-0,30	90 (80-100)	120 (80-150)
K4	Pxx-EN3-00	0,10-0,20	0,10-0,30	0,10-0,30	70 (60-80)	90 (80-100)
K5	Pxx-EN3-00	0,10-0,20	0,10-0,30	0,10-0,30	70 (60-80)	90 (80-100)
K6	Pxx-EN3-00	0,10-0,20	0,10-0,30	0,10-0,30	90 (80-100)	120 (80-150)
K7	Pxx-EN3-00	0,10-0,20	0,10-0,30	0,10-0,30	90 (80-100)	120 (80-150)
PM1	Pxx-EN3-00	0,10-0,20	0,10-0,30	0,10-0,30	50 (25-70)	-
PM2	Pxx-EN3-00	0,10-0,20	0,10-0,30	0,10-0,30	50 (25-70)	-
PM3	Pxx-EN3-00	0,10-0,20	0,10-0,30	0,10-0,30	50 (25-70)	-

SMG = Seco material group
a_p = mm
f = mm/rev
v_c= m/min
All cutting data are start values

Cutting data – Pxx-EN3-06

SMG		a_p (Ø)		f	V_c			
		Ø < 9	Ø ≥ 9		H15	CP20	CP15	CF
P1	Pxx-EN3-06	0,10-0,15	0,10-0,20	0,10-0,30	40 (30-60)	105 (90-120)	120 (90-150)	200 (100-300)
P2	Pxx-EN3-06	0,10-0,15	0,10-0,20	0,10-0,30	40 (30-60)	105 (90-120)	120 (90-150)	200 (100-300)
P3	Pxx-EN3-06	0,10-0,15	0,10-0,20	0,10-0,30	40 (30-60)	105 (90-120)	120 (90-150)	200 (100-300)
P4	Pxx-EN3-06	0,10-0,15	0,10-0,20	0,10-0,30	35 (25-40)	60 (40-70)	80 (60-100)	150 (100-200)
P5	Pxx-EN3-06	0,10-0,15	0,10-0,20	0,10-0,30	35 (25-40)	60 (40-70)	80 (60-100)	150 (100-200)
P6	Pxx-EN3-06	0,10-0,15	0,10-0,20	0,10-0,30	35 (25-40)	60 (40-70)	80 (60-100)	150 (100-200)
P7	Pxx-EN3-06	0,10-0,15	0,10-0,20	0,10-0,30	35 (25-40)	60 (40-70)	80 (60-100)	150 (100-200)
P8	Pxx-EN3-06	0,10-0,15	0,10-0,20	0,10-0,30	30 (25-40)	50 (30-60)	60 (40-70)	150 (100-200)
P11	Pxx-EN3-06	0,10-0,15	0,10-0,20	0,10-0,30	30 (25-40)	50 (30-60)	60 (40-70)	-
M1	Pxx-EN3-06	0,10-0,15	0,10-0,20	0,10-0,30	-	-	35 (25-40)	-
M2	Pxx-EN3-06	0,10-0,15	0,10-0,20	0,10-0,30	-	-	35 (25-40)	-
M3	Pxx-EN3-06	0,10-0,15	0,10-0,20	0,10-0,30	-	-	35 (25-40)	-
M4	Pxx-EN3-06	0,10-0,15	0,10-0,20	0,10-0,30	-	-	30 (25-40)	-
M5	Pxx-EN3-06	0,10-0,15	0,10-0,20	0,10-0,30	-	-	30 (25-40)	-
K1	Pxx-EN3-06	0,10-0,20	0,10-0,30	0,10-0,30	-	90 (80-100)	120 (80-150)	-
K2	Pxx-EN3-06	0,10-0,20	0,10-0,30	0,10-0,30	-	35 (25-50)	50 (25-70)	-
K3	Pxx-EN3-06	0,10-0,20	0,10-0,30	0,10-0,30	-	90 (80-100)	120 (80-150)	-
K4	Pxx-EN3-06	0,10-0,20	0,10-0,30	0,10-0,30	-	70 (60-80)	90 (80-100)	-
K5	Pxx-EN3-06	0,10-0,20	0,10-0,30	0,10-0,30	-	70 (60-80)	90 (80-100)	-
K6	Pxx-EN3-06	0,10-0,20	0,10-0,30	0,10-0,30	-	90 (80-100)	120 (80-150)	-
K7	Pxx-EN3-06	0,10-0,20	0,10-0,30	0,10-0,30	-	90 (80-100)	120 (80-150)	-
PM1	Pxx-EN3-06	0,10-0,20	0,10-0,30	0,10-0,30	-	50 (25-70)	-	-
PM2	Pxx-EN3-06	0,10-0,20	0,10-0,30	0,10-0,30	-	50 (25-70)	-	-
PM3	Pxx-EN3-06	0,10-0,20	0,10-0,30	0,10-0,30	-	50 (25-70)	-	-

Cutting data – Pxx-EN3-12

SMG		a_p (Ø)		f	V_c		
		Ø < 9	Ø ≥ 9		H15	CP20	CP15
P1	Pxx-EN3-12	0,10-0,15	0,10-0,20	0,10-0,30	40 (30-60)	105 (90-120)	120 (90-150)
P2	Pxx-EN3-12	0,10-0,15	0,10-0,20	0,10-0,30	40 (30-60)	105 (90-120)	120 (90-150)
P3	Pxx-EN3-12	0,10-0,15	0,10-0,20	0,10-0,30	40 (30-60)	105 (90-120)	120 (90-150)
P4	Pxx-EN3-12	0,10-0,15	0,10-0,20	0,10-0,30	35 (25-40)	60 (40-70)	80 (60-100)
P5	Pxx-EN3-12	0,10-0,15	0,10-0,20	0,10-0,30	35 (25-40)	60 (40-70)	80 (60-100)
P6	Pxx-EN3-12	0,10-0,15	0,10-0,20	0,10-0,30	35 (25-40)	60 (40-70)	80 (60-100)
P7	Pxx-EN3-12	0,10-0,15	0,10-0,20	0,10-0,30	35 (25-40)	60 (40-70)	80 (60-100)
P8	Pxx-EN3-12	0,10-0,15	0,10-0,20	0,10-0,30	30 (25-40)	50 (30-60)	60 (40-70)
P11	Pxx-EN3-12	0,10-0,15	0,10-0,20	0,10-0,30	30 (25-40)	50 (30-60)	60 (40-70)
K1	Pxx-EN3-12	0,10-0,20	0,10-0,30	0,10-0,30	-	90 (80-100)	-
K3	Pxx-EN3-12	0,10-0,20	0,10-0,30	0,10-0,30	-	90 (80-100)	-
K4	Pxx-EN3-12	0,10-0,20	0,10-0,30	0,10-0,30	-	70 (60-80)	-
K5	Pxx-EN3-12	0,10-0,20	0,10-0,30	0,10-0,30	-	70 (60-80)	-
PM1	Pxx-EN3-12	0,10-0,20	0,10-0,30	0,10-0,30	-	50 (25-70)	-
PM2	Pxx-EN3-12	0,10-0,20	0,10-0,30	0,10-0,30	-	50 (25-70)	-
PM3	Pxx-EN3-12	0,10-0,20	0,10-0,30	0,10-0,30	-	50 (25-70)	-

SMG = Seco material group
a_p = mm
f = mm/rev
v_c= m/min
All cutting data are start values

Adjustment instructions

1



Loosen the two adjustment screws (7) by a 1/4 turn.

2



Loosen the two clamping screws (5).

3



Clean the blade seat thoroughly then, index the used blade (2) edge or replace it.

4



Firmly push the blade against the axial end stop and the adjustment balls (6).

5



Tighten the clamping screws carefully.
(Hold the key at its shortest end for correct torque).

6



Set the µm clock to zero using the cylindrical rear end of guiding pads (3).

Adjustment instructions

7



Set the rear end of the blade to a diameter so that a back taper of 0,01 mm/10 mm blade length is achieved (see figure 2).

8



Set the µm clock to zero using the cylindrical front end of guiding pads (3).

9



Set the front end of the blade to 0,02 mm or 0,015 mm above the guide pads (3) clock A, see figure 1.
Check again back taper value (steps 6 and 7) clock B.

10

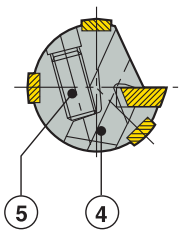

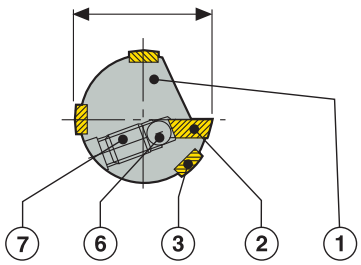

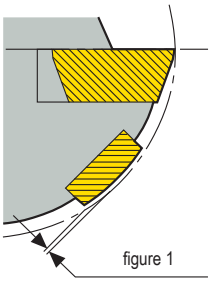

figure 1

0,015 mm (∅ ≤ 10 mm)
0,020 mm (∅ > 10 mm)
clock A value for ∅ setting

Note: If the required diameter is exceeded during adjustment, start again from the beginning to eliminate backlash on adjustment screws.

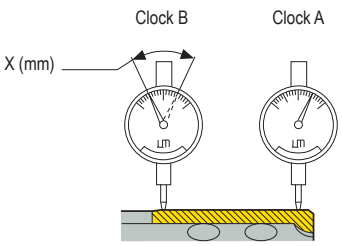

figure 2

Setting chart

Diameter range	Blade size	Front clock A	Rear clock B
5,900-6,874	P00	+15	+5
6,875-8,749	P0	+15	-5
8,750-10,000	P1	+15	-5
10,001-12,749	P1	+20	0
12,750-19,499	P2	+20	0
19,500-60,500	P4	+20	0

- Clock unit = 1 µm
- Front & rear clock values valid when set zero on adjacent pad
- Rear clock values calculated on back taper of 1 µm/mm of blade

Poor surface finish

- Check material allowances
- Improve coolant conditions (outlet type, pressure, quality)
- Reduce feed rate
- Change blade (wrong lead geometry or wrong rake angle)
- Check axial position of blade

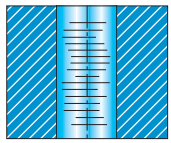

Facets

- Improve centring (part/tool)
- Increase back taper

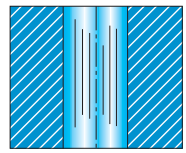

Retraction marks

- Improve coolant conditions (outlet type, pressure, quality)
- Improve centring (part/tool)
- Increase back taper

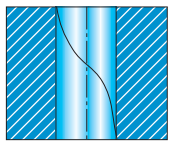

Off centre/Ovality

- Improve clamping (workpiece deformation)
- Check material allowance
- Improve centring (part/tool)
- Check axial position of blade

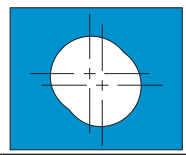

Tapered entry

- Reduce feed rate
- Improve centring (part/tool)
- Check back taper
- Reduce radial run-out

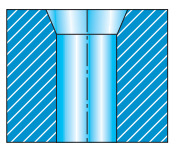

Tapered hole

- Improve centring (part/tool)
- Check back taper

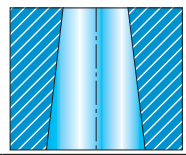

Deformed hole

- Improve clamping (workpiece deformation)

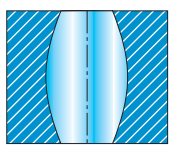

Curved hole

- Change blade (wrong lead geometry)
- Check axial position of blade

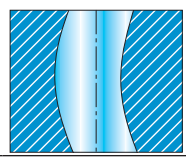

Too large diameter

- Improve centring (part/tool)
- Adjust diameter (too large)

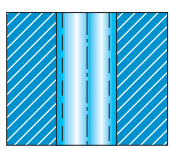

Adhesion to pads

- Improve coolant conditions (outlet type, pressure, quality)
- Adjust diameter (too small)

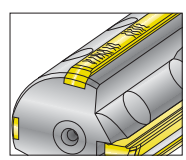



Precifix™	∅ Range	Reaming depth	Hole tolerance	Intermediate diameters	Surface finish
	11,750–17,499 mm	~ 2–10 x D	IT 6–7	Yes, available through Custom design	R_a 0,4–0,8 µm
	17,500–31,499 mm	~ 2–8 x D	IT 6–7	Yes, available through Custom design	R_a 0,4–0,8 µm
	31,500–44,499 mm	~ 2–5 x D	IT 6–7	Yes, available through Custom design	R_a 0,4–0,8 µm
	44,500–60,500 mm	~ 2–3 x D	IT 6–7	Yes, available through Custom design	R_a 0,4–0,8 µm

Code key – Shanks

Shank size:		Max reaming depth		Neutral	
PM07	B -	06400	- 16 -	N	1
			Cyl. shank dia		1: Cyl shank DIN1835

∅ 11,750-17,499 – PM07B shank size
∅ 17,500-31,499 – PM08B shank size
∅ 31,500-44,499 – PM15B shank size
∅ 44,500-60,500 – PM19B shank size



Code key – Heads

PF84 -	18 H6	- EN1
Head type	Hole diameter and tolerance	Type of lead geometry (EN1 double lead angle 30/3°)

Code key – Heads – Intermediate diameter

PF84 -	18 H6	- EN1
Head type	Hole diameter and tolerance	Type of lead geometry (EN1 double lead angle 30/3°)



Code key – Inserts

	Type of lead geometry		Grade: T100R, H02, CM
LNEG1003 -	EN1 -	06 -	T100R
Insert type: ∅ 11,750–17,499 – LNEG0702 ∅ 17,500–31,499 – LNEG1003 ∅ 31,500–60,500 – RNAX1005		Cutting rake angle: 6°, 12°	

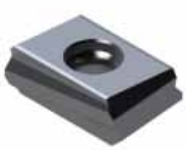

Set up – Run-out

Rotating tool

0,02 mm max

Max. run-out allowed is 0,02 mm.
Precision holder is recommended : Hydraulic chuck, D-type collet chuck, 5672 collet chuck or Shrinkfit.



Stationary tool

Use a Seco floating holder see page 469-473.

Coolant requirements

To reach maximum tool life and hole quality, the following coolant requirements should be observed.
Coolant through the tool is recommended. External coolant supply can be used if reaming depth < 2 x D.
Quality soluble oil with 40% minimum mineral oil. Neat oil recommended for stainless steel.
Concentration minimum 6–8%.
Filtration 30–50 µm.
Volume min 0,5 l/min/mm in tool diameter. (Ex: Reamer ∅ 10, min volume is 5 l/min).

Setting fixture



SF-60200-C160: Part No. 02885395

- Horizontal stand
- First choice for Ø smaller than 60 mm
- 1 clock
- Maximum tool Ø: 60,5 mm
- Maximum tool length: 200 mm

Heads for ∅11,750-17,499



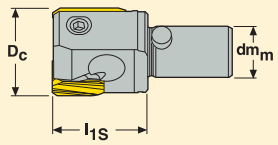

- For complete blade programme see page 413
- For cutting data recommendations see page 415

D_c	Drill size*	Part No.	Dimensions in mm		Blade size
			l_{1S}	dm_m	
12	11.8/11.908	PF84-12H6-EN1	13	7	LNEG0702-EN1...
13	12.8/12.9	PF84-13H6-EN1	13	7	LNEG0702-EN1...
14	13.8/13.891	PF84-14H6-EN1	13	7	LNEG0702-EN1...
15	14.8/14.9	PF84-15H6-EN1	13	7	LNEG0702-EN1...
16	15.8/15.9	PF84-16H6-EN1	13	7	LNEG0702-EN1...
17	16.8/16.9	PF84-17H6-EN1	13	7	LNEG0702-EN1...

Spare Parts

For ∅ (mm)	Setting screw	Setting key	Insert screw	Cylindrical cartridge	Clamp screw	Clamp
11,750-17,499	SH3030P	1.5SMS795	C01805-T06P	CARTCY4	C02506-T07P	CLW5

Accessories**

Torque key
T00-07P05

* For further information on which drill to use and how to use it see page 9. ** Accessories not included in delivery.
When ordering intermediate diameters please state ∅ and tolerance of hole to be reamed. Ordering example: PF84-12.700 ± 8 µm-EN1.

Shanks for ∅11,750-17,499



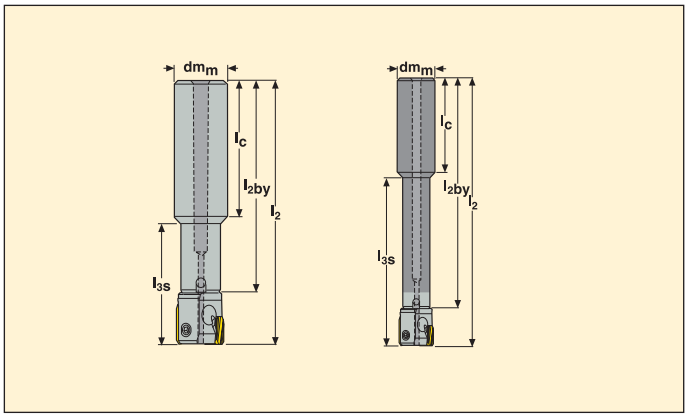

Dc	Head	Tool holder material	Part No.	Dimensions in mm				
				l2	l2by	l3s	lc	dmm
11.750-17.499	PF84	Steel	PM07B-03300-16N1	84	72	33	48	16
	PF84	Steel	PM07B-06400-16N1	115	103	64	48	16
	PF84	Steel	PM07B-12000-16N1	171	159	120	48	16
	PF84	Carbide	PM07BHM-06400-16N1	115	103	64	48	16
	PF84	Carbide	PM07BHM-12000-16N1	171	159	120	48	16

Spare Parts

For shank	Clamp kit	Clamp key
PM07B	PM07-CLKI	1.5SMS795

Accessories*

Torque key	Replacement blade
H00-1505	H00-1.5

* Accessories not included in delivery.

Heads for ∅17,500-24,499



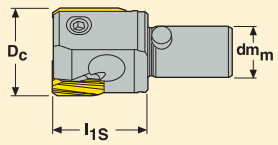

- For complete blade programme see page 413
- For cutting data recommendations see page 415

D_c	Drill size*	Part No.	Dimensions in mm		Blade size
			l_{1s}	dm_m	
18	17,8/17,9	PF84-18H6-EN1	20	8	LNEG1003-EN1...
19	18,8/18,9	PF84-19H6-EN1	20	8	LNEG1003-EN1...
20	19,8/19,9	PF84-20H6-EN1	20	8	LNEG1003-EN1...
21	20,8/20,9	PF84-21H6-EN1	20	8	LNEG1003-EN1...
22	21,8/21,9	PF84-22H6-EN1	20	8	LNEG1003-EN1...
23	22,8/22,9	PF84-23H6-EN1	20	8	LNEG1003-EN1...
24	23,813/23,9	PF84-24H6-EN1	20	8	LNEG1003-EN1...

Spare Parts

For ∅ (mm)	Setting screw	Setting key	Insert screw	Cylindrical cartridge	Clamp screw	Clamp
17,500-24,499	SH4040P	2SMS795	C02506-T07P	CARTCY6	C03010-T09P	CLW7

Accessories**

Torque key
T00-09P09

* For further information on which drill to use and how to use it see page 9. ** Accessories not included in delivery.
When ordering intermediate diameters please state ∅ and tolerance of hole to be reamed. Ordering example: PF84-25.400 ± 18 µm-EN1.

Shanks for ∅17,500-24,499



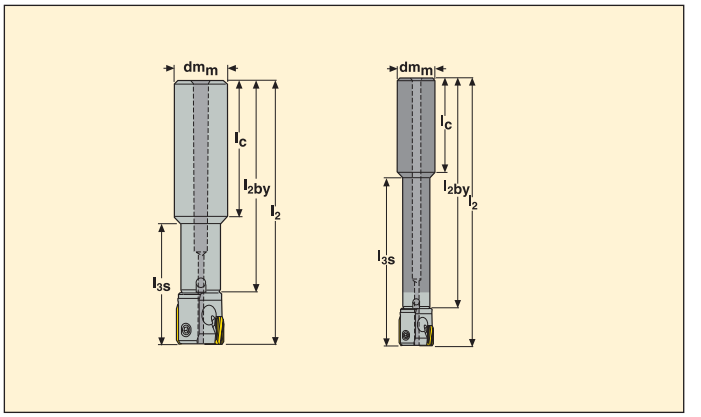

Dc	Head	Tool holder material	Part No.	Dimensions in mm				
				l2	l2by	l3s	lc	dmm
17.500-24.499	PF84	Steel	PM08B-03800-12N1	116	78	38	50	12
	PF84	Steel	PM08B-03800-16N1	116	78	63	50	16
	PF84	Steel	PM08B-03800-20N1	91	78	38	50	20
	PF84	Steel	PM08B-08200-20N1	135	122	82	50	20
	PF84	Steel	PM08B-14500-20N1	198	185	145	50	20
	PF84	Carbide	PM08BHM-08200-20N1	135	122	82	50	20
	PF84	Carbide	PM08BHM-14500-20N1	198	185	145	50	20

Spare Parts

For shank	Clamp kit	Clamp key
	PM08-CLKI	2SMS795
PM08B	PM08-CLKI	2SMS795

Accessories*

Torque key	Replacement blade
H00-2009	H00-2.0

* Accessories not included in delivery.

Heads for ∅24,500-31,499



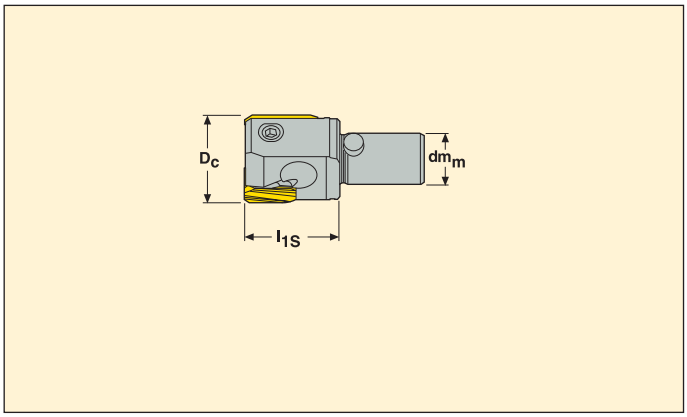

- For complete blade programme see page 413
- For cutting data recommendations see page 415

D_c	Drill size*	Part No.	Dimensions in mm		Blade size
			l_{1s}	dm_m	
25	24,8/24,9	PF84-25H6-EN1	20	11	LNEG1003-EN1...
26	25,8/25,9	PF84-26H6-EN1	20	11	LNEG1003-EN1...
27	26.8/26.9	PF84-27H6-EN1	20	11	LNEG1003-EN1...
28	27.8/27.9	PF84-28H6-EN1	20	11	LNEG1003-EN1...
29	28.8/28.9	PF84-29H6-EN1	20	11	LNEG1003-EN1...
30	29.8/29.9	PF84-30H6-EN1	20	11	LNEG1003-EN1...
31	30.8/30.9	PF84-31H6-EN1	20	11	LNEG1003-EN1...

Spare Parts

For ∅ (mm)	Setting screw	Setting key	Insert screw	Cylindrical cartridge	Clamp screw	Clamp
24,500-31,499	SH4040P	2SMS795	C02506-T07P	CARTCY6	C03010-T09P	CLW7

Accessories**

Torque key
T00-09P09

* For further information on which drill to use and how to use it see page 9. **Accessories not included in delivery.
When ordering intermediate diameters please state ∅ and tolerance of hole to be reamed. Ordering example: PF84-25.400 ± 18 µm-EN1.

Shanks for ∅24,500-31,499



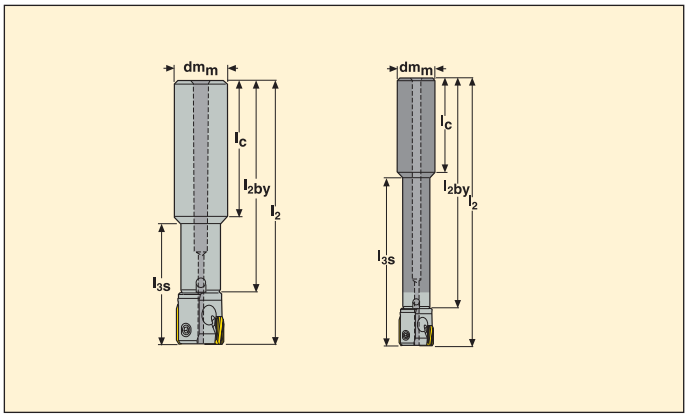

Dc	Head	Tool holder material	Part No.	Dimensions in mm				
				l2	l2by	l3s	lc	dmm
24.500-31.499	PF84	Steel	PM11B-04800-25N1	107	91	48	56	25
	PF84	Steel	PM11B-10600-25N1	165	149	106	56	25
	PF84	Steel	PM11B-17000-25N1	229	213	170	56	25
	PF84	Carbide	PM11BHM-10600-25N1	165	149	106	56	25
	PF84	Carbide	PM11BHM-17000-25N1	229	213	170	56	25

Spare Parts

For shank	Clamp kit	Clamp key
PM11B	PM11-CLKI	2.5SMS795

Accessories*

Torque key	Replacement blade
H00-2512	H00-2.5

* Accessories not included in delivery.

Heads for ∅31,500-44,399

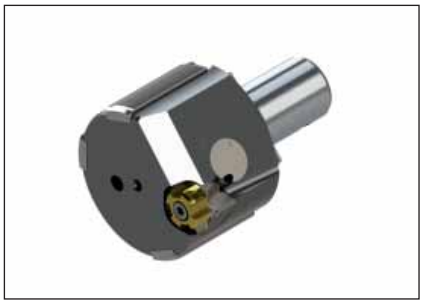

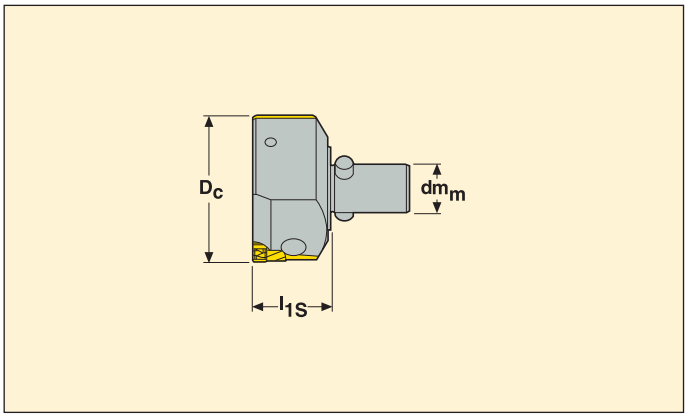

- For complete blade programme see page 413
- For cutting data recommendations see page 415

D_c	Drill size*	Part No.	Dimensions in mm		Blade size
			l_{1s}	dm_m	
32	31.70/31.80	PF84-32H6-EN1	31	15	RNAX1005-EN1...
33	32.70/32.80	PF84-33H6-EN1	31	15	RNAX1005-EN1...
34	33.70/33.80	PF84-34H6-EN1	31	15	RNAX1005-EN1...
35	34.70/34.80	PF84-35H6-EN1	31	15	RNAX1005-EN1...
36	35.70/35.80	PF84-36H6-EN1	31	15	RNAX1005-EN1...
38	37.70/37.80	PF84-38H6-EN1	31	15	RNAX1005-EN1...
39	38.70/38.80	PF84-39H6-EN1	31	15	RNAX1005-EN1...
40	39.70/39.80	PF84-40H6-EN1	31	15	RNAX1005-EN1...
41	40.70/40.80	PF84-41H6-EN1	31	15	RNAX1005-EN1...
42	41.70/41.80	PF84-42H6-EN1	31	15	RNAX1005-EN1...
43	42.70/42.80	PF84-43H6-EN1	31	15	RNAX1005-EN1...
44	43.70/43.80	PF84-44H6-EN1	31	15	RNAX1005-EN1...

Spare Parts

For drill dia (mm)	Torque key**	Setting screw	Key	Insert screw	Cylindrical cartridge	Clamp screw	Clamp
31,500-44,499	T00-09P20	SH4080P	2,0 SMS795	C03010-T07P	CARTCY12	C04013-T15P	CLW10

Accessories**

Torque key
T00-15P20

* For further information on which drill to use and how to use it see page 9. **Accessories not included in delivery.
When ordering intermediate diameters please state ∅ and tolerance of hole to be reamed. Ordering example: PF84-31,500 K6-EN1.

Shanks for ∅31,500-44,499



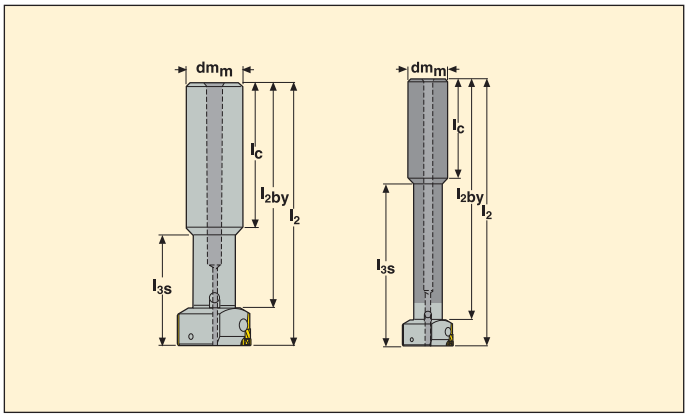

D_c	Head	Tool holder material	Part No.	Dimensions in mm				
				l_2	l_{2by}	l_{3s}	l_c	dm_m
31.500-44.499	PF84	Steel	PM15B-06300-25N1	121	101	63	56	25
	PF84	Steel	PM15B-12700-25N1	185	165	127	56	25
	PF84	Steel	PM15B-17000-25N1	229	209	170	56	25
	PF84	Carbide	PM15BHM-12700-25N1	185	165	127	56	25
	PF84	Carbide	PM15BHM-17000-25N1	229	209	170	56	25

Spare Parts

For shank	Clamp kit	Clamp key
	PM15-CLKI	3SMS795
PM15B	PM15-CLKI	3SMS795

Accessories*

Torque key	Replacement blade
H00-3020	H00-3.0

* Accessories not included in delivery.

Heads for ∅44,500-60,500

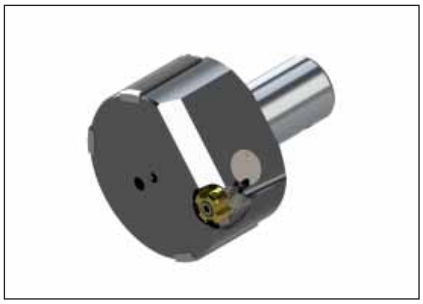

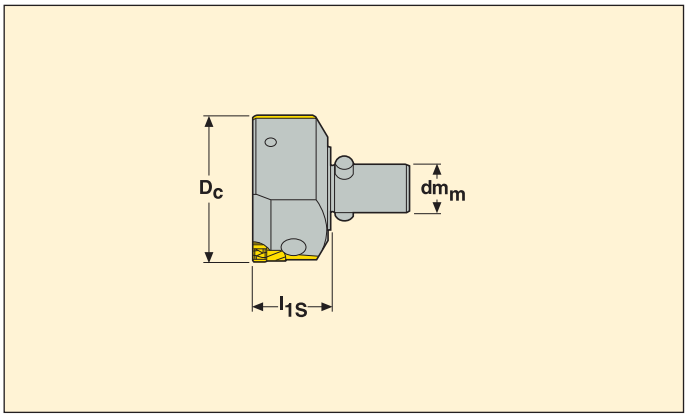

- For complete blade programme see page 413
- For cutting data recommendations see page 415

D_c	Drill size*	Part No.	Dimensions in mm		Blade size
			l_{1S}	dm_m	
45	44.70/44.80	PF84-45H6-EN1	31	19	RNAX1005-EN1...
46	45.70/45.80	PF84-46H6-EN1	31	19	RNAX1005-EN1...
47	46.70/46.80	PF84-47H6-EN1	31	19	RNAX1005-EN1...
48	47.70/47.80	PF84-48H6-EN1	31	19	RNAX1005-EN1...
49	48.70/48.80	PF84-49H6-EN1	31	19	RNAX1005-EN1...
50	49.70/49.80	PF84-50H6-EN1	31	19	RNAX1005-EN1...
51	50.70/50.80	PF84-51H6-EN1	31	19	RNAX1005-EN1...
52	51.70/51.80	PF84-52H6-EN1	31	19	RNAX1005-EN1...
53	52.70/52.80	PF84-53H6-EN1	31	19	RNAX1005-EN1...
54	53.70/53.80	PF84-54H6-EN1	31	19	RNAX1005-EN1...
55	54.70/54.80	PF84-55H6-EN1	31	19	RNAX1005-EN1...
56	55.70/55.80	PF84-56H6-EN1	31	19	RNAX1005-EN1...
57	56.70/56.80	PF84-57H6-EN1	31	19	RNAX1005-EN1...
58	57.70/57.80	PF84-58H6-EN1	31	19	RNAX1005-EN1...
59	58.70/58.80	PF84-59H6-EN1	31	19	RNAX1005-EN1...
60	59.70/59.80	PF84-60H6-EN1	31	19	RNAX1005-EN1...

Spare Parts

Accessories**

For drill dia (mm)	Setting screw	Setting key	Insert screw	Cylindrical cartridge	Clamp screw	Clamp	Torque key*
44,500-60,500	SH4080P	2,0 SMS795	C03010-T07P	CARTCY12	C04013-T15P	CLW10	T00-15P20

* For further information on which drill to use and how to use it see page 9. **Accessories not included in delivery.
When ordering intermediate diameters please state ∅ and tolerance of hole to be reamed. Ordering example: PF84-51,250 M7-EN1.

Shanks for ∅44,500-60,500



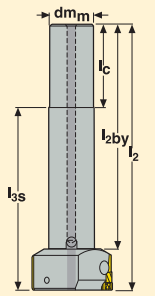

D_c	Head	Tool holder material	Part No.	Dimensions in mm				
				l_2	l_{2by}	l_{3s}	l_c	dm_m
44.500-60.500	PF84	Steel	PM19B-08800-32N1	149	127	88	61	32
	PF84	Steel	PM19B-14700-32N1	208	186	147	61	32

Spare Parts

For shank	Clamp kit	Clamp key
PM19B	PM19-CLKI	4SMS795

* Accessories not included in delivery.

Heads for ∅11,750-60,500 – Intermediate diameters



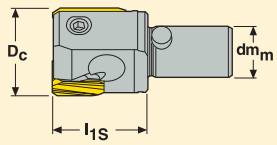

- For complete blade programme see page 413
- For cutting data recommendations see page 415

D_c	Part No.	Dimensions in mm		Blade size
		l_{1s}	dm_m	
11,750-17,499	PF84-xx.xxx-EN1	13	7	LNEG0702EN1...
17,500-24,499	PF84-xx.xxx-EN1	20	8	LNEG1003EN1...
24,500-31,499	PF84-xx.xxx-EN1	20	11	LNEG1003EN1...
31,500-44,499	PF84-xx.xxx-EN1	31	15	RNAX1005...
44,500-60,500	PF84-xx.xxx-EN1	31	19	RNAX1005...

Spare Parts

For drill ∅ (mm)	Insert screw	Torque key**	Torque value	Cylindrical cartride	Clamp	Clamp screw	Torque key**	Torque value	Setting screw	Setting key
11,750-17,499	C01805-T06P	T00-06P05	0,5 Nm	CARTCY4	CLW5	C02506-T07P	T00-07P05	0,5 Nm	SH3030P	1,5 SMS795
17,500-24,499	C02506-T07P	T00-07P09	0,9 Nm	CARTCY6	CLW7	C03010-T09P	T00-09P09	0,9 Nm	SH4040P	2,0 SMS795
24,500-31,499	C02506-T07P	T00-07P09	0,9 Nm	CARTCY6	CLW7	C03010-T09P	T00-09P09	0,9 Nm	SH4040P	2,0 SMS795
31,500-44,499	C03010-T07P	T00-09P20	2,0 Nm	CARTCY12	CLW10	C04013-T15P	T00-15P20	2,0 Nm	SH4080P	2,0 SMS795
44,500-60,500	C03010-T07P	T00-09P20	2,0 Nm	CARTCY12	CLW10	C04013-T15P	T00-15P20	2,0 Nm	SH4080P	2,0 SMS795

* For further information on which drill to use and how to use it see page 9. ** To be ordered separately.
When ordering intermediate diameters please state ∅ and tolerance of hole to be reamed. Ordering example: PF84-12.700 ± 8 µm-EN1.

Grades

	T100R	Coated PVD coated hard micrograin grade, suitable for most materials. (Ti,Al) N
	H02	Uncoated A tough micrograin grade for all materials. Suitable for fine-reaming operations thanks to very good edge sharpness.
	CM	Cermet A very high wear resistant grade. Intended for finishing operation on steels, in which strict demands are made on surface finish.

Blades/Grades LNEG

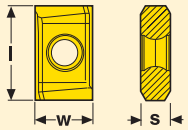

Size	Dimensions in mm		
	l	W	s
07	7	4,2	2,25
10	10	6,35	3,5

Inserts	Part No.	Grades		
		T100R	H02	CM
LNEG-EN1				
	LNEG0702-EN1-06	■	■	■
	LNEG0702-EN1-12	■	■	
	LNEG1003-EN1-06	■	■	■
	LNEG1003-EN1-12	■	■	

Blades/Grades RNAX

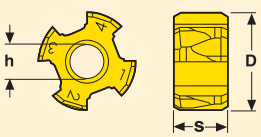

Size	Dimensions in mm		
	d	s	d_1
10	10	5,5	3,5

Inserts	Part No.	Grades		
		T100R	H02	CM
RNAX-EN1				
	RNAX1005-EN1-06	■	■	■
	RNAX1005-EN1-12	■	■	■

■ Stock standard.
Subject to change refer to current price and stock-list.

Custom design – No waiting for quotations – Short delivery time

Custom Design is also available for Precifix reamers and tool holders.
You can now quote for your own intermediate ∅ reamer and tailor made Precifix tool holder using the Seco Custom Design software.
Easy to use concept: Just indicate component min/max ∅ or use ISO tolerance system available in the software.
Precifix head designation is created automatically.
Custom Design gives you a number of advantages:

- No waiting for quotations! Price and delivery time available instantly!
- Directly visualises your needs. No risk of misunderstandings
- Short delivery time

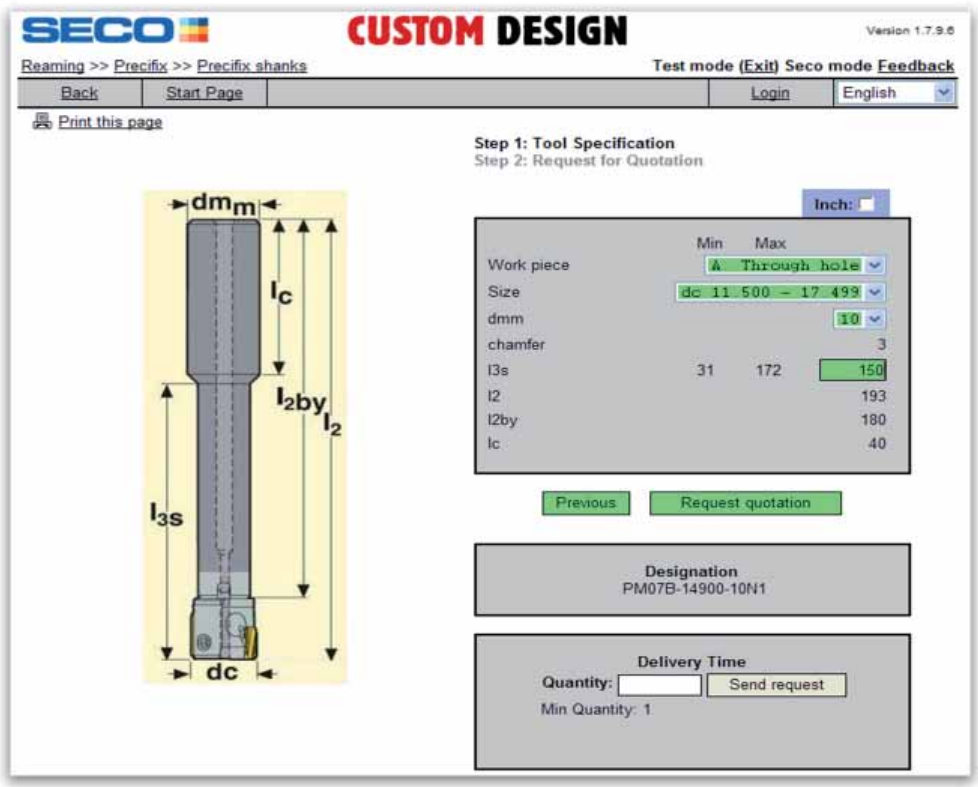

Please contact your local Seco representative for more information.

Cutting data – LNEG...-EN1

SMG		a_p (Ø)	f	V_c		
				H02	T100R	CM
P1	LNEG...-EN1	0,1-0,2	0,1-0,3	40 (30-60)	100 (80-120)	150 (120 - 250)
P2	LNEG...-EN1	0,1-0,2	0,1-0,3	40 (30-60)	100 (80-120)	150 (120 - 250)
P3	LNEG...-EN1	0,1-0,2	0,1-0,3	40 (30-60)	100 (80-120)	150 (120 - 250)
P4	LNEG...-EN1	0,1-0,2	0,1-0,3	30 (20-40)	60 (40-80)	80 (60-150)
P5	LNEG...-EN1	0,1-0,2	0,1-0,3	30 (20-40)	60 (40-80)	80 (60-150)
P6	LNEG...-EN1	0,1-0,2	0,1-0,3	30 (20-40)	60 (40-80)	80 (60-150)
P7	LNEG...-EN1	0,1-0,2	0,1-0,3	30 (20-40)	60 (40-80)	80 (60-150)
P8	LNEG...-EN1	0,1-0,2	0,1-0,3	30 (20-40)	40 (30-80)	-
P11	LNEG...-EN1	0,1-0,2	0,1-0,3	30 (20-40)	40 (30-80)	-
M1	LNEG...-EN1	0,08-0,15	0,1-0,2	25 (20-30)	30 (20-40)	-
M2	LNEG...-EN1	0,08-0,15	0,1-0,2	25 (20-30)	30 (20-40)	-
M3	LNEG...-EN1	0,08-0,15	0,1-0,2	25 (20-30)	30 (20-40)	-
M4	LNEG...-EN1	0,08-0,15	0,1-0,2	20 (15-30)	25 (20-30)	-
M5	LNEG...-EN1	0,08-0,15	0,1-0,2	20 (15-30)	25 (20-30)	-
K1	LNEG...-EN1	0,20-0,50	0,1-0,3	-	90 (70-120)	-
K2	LNEG...-EN1	0,20-0,50	0,1-0,3	-	35 (50-80)	-
K3	LNEG...-EN1	0,20-0,50	0,1-0,3	-	90 (70-120)	-
K4	LNEG...-EN1	0,20-0,50	0,1-0,3	-	70 (50-100)	100 (60-120)
K5	LNEG...-EN1	0,20-0,50	0,1-0,3	-	70 (50-100)	100 (60-120)
K6	LNEG...-EN1	0,20-0,50	0,1-0,3	-	90 (70-120)	-
K7	LNEG...-EN1	0,20-0,50	0,1-0,3	-	90 (70-120)	-
S11	LNEG...-EN1	0,08-0,15	0,1-0,2	15 (10-25)	-	-
S12	LNEG...-EN1	0,08-0,15	0,1-0,2	15 (10-25)	-	-
S13	LNEG...-EN1	0,08-0,15	0,1-0,2	15 (10-25)	-	-

Cutting data – RNAX...-EN1

SMG		a_p (Ø)	f	V_c		
				H02	T100R	CM
P1	RNAX...-EN1	0,1-0,2	0,1-0,3	40 (30-60)	100 (80-120)	150 (120 - 250)
P2	RNAX...-EN1	0,1-0,2	0,1-0,3	40 (30-60)	100 (80-120)	150 (120 - 250)
P3	RNAX...-EN1	0,1-0,2	0,1-0,3	40 (30-60)	100 (80-120)	150 (120 - 250)
P4	RNAX...-EN1	0,1-0,2	0,1-0,3	30 (20-40)	60 (40-80)	80 (60-150)
P5	RNAX...-EN1	0,1-0,2	0,1-0,3	30 (20-40)	60 (40-80)	80 (60-150)
P6	RNAX...-EN1	0,1-0,2	0,1-0,3	30 (20-40)	60 (40-80)	80 (60-150)
P7	RNAX...-EN1	0,1-0,2	0,1-0,3	30 (20-40)	60 (40-80)	80 (60-150)
P8	RNAX...-EN1	0,1-0,2	0,1-0,3	30 (20-40)	40 (30-80)	-
P11	RNAX...-EN1	0,1-0,2	0,1-0,3	30 (20-40)	40 (30-80)	-
K1	RNAX...-EN1	0,20-0,50	0,1-0,3	-	90 (70-120)	-
K2	RNAX...-EN1	0,20-0,50	0,1-0,3	-	35 (50-80)	-
K3	RNAX...-EN1	0,20-0,50	0,1-0,3	-	90 (70-120)	-
K4	RNAX...-EN1	0,20-0,50	0,1-0,3	-	70 (50-100)	100 (60-120)
K5	RNAX...-EN1	0,20-0,50	0,1-0,3	-	70 (50-100)	100 (60-120)
K6	RNAX...-EN1	0,20-0,50	0,1-0,3	-	90 (70-120)	-
K7	RNAX...-EN1	0,20-0,50	0,1-0,3	-	90 (70-120)	-

SMG = Seco material group
a_p = mm
f = mm/rev
v_c= m/min
All cutting data are start values

Adjustment instructions

1 Unscrew blade locking screw ‘A’ and remove blade ‘1’.



2 Loosen clamping screw ‘B’ 2-3 revolutions.



3 Tighten adjusting screw ‘C’ to push adjustable cartridge ‘2’ and unlock cylindrical clamp ‘3’.



4 Push adjustable cartridge ‘2’ fully back in its seat pocket.



5 Put cylindrical clamp ‘3’ back in position against adjustable cartridge ‘2’.



6 Tighten clamping screw ‘B’.



7 Clean the blade seat thoroughly then, index the used blade ‘1’ or replace it.



8 Place clock at front end of blade and set to zero using the cylindrical guiding pads ‘4’.



9 Set the insert to 0,02 mm above guiding pad ‘4’.

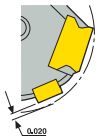

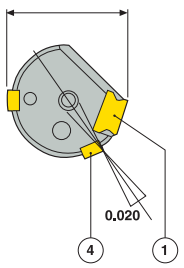

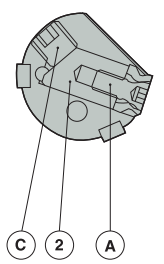

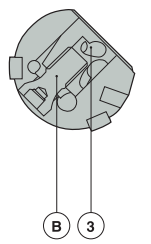

1 = Insert
2 = Adjustable cartridge
3 = Cylindrical clamp
4 = Guiding pads

A = Insert locking screw
B = Clamping screw
C = Adjusting screw

Note: If the required diameter is exceeded during adjustment, start again from the beginning to eliminate backlash on adjustment screws.

Coolant setting instructions

1 Unscrew blade locking screw ‘A’ and remove blade ‘1’.



2 Loosen clamping screw ‘B’ 2-3 revolutions.



3 Tighten adjusting screw ‘C’ to push adjustable cartridge ‘2’ and unlock cylindrical clamp ‘3’.



4 Push adjustable cartridge ‘2’ fully back in its seat pocket.



5 Index and put cylindrical clamp ‘3’ back in position against adjustable cartridge ‘2’:
Mark on clamp facing ‘T’ index
– Coolant outlet set for THROUGH holes.
Mark on clamp facing ‘B’ index
– Coolant outlet set for BLIND holes.



6 Tighten clamping screw ‘B’.



7 Proceed to blade setting - Adjustment instructions see previous page.

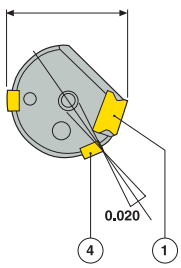

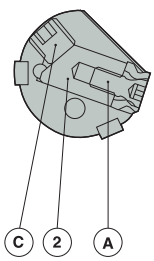

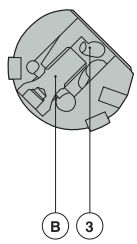

1 = Insert
2 = Adjustable cartridge
3 = Cylindrical clamp
4 = Guiding pads

A = Insert locking screw
B = Clamping screw
C = Adjusting screw

Troubleshooting

Poor surface finish

- Check material allowance.
- Improve coolant conditions (outlet type, pressure, quality).
- Reduce feed rate.
- Change blade (wrong lead geometry or wrong rake angles).
- Check axial position of blade.

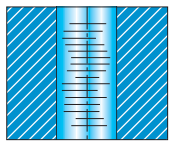

Facets

- Improve centring (part/tool).

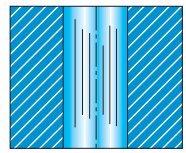

Retraction marks

- Improve coolant conditions (outlet type, pressure, quality).
- Improve centring (part/tool).

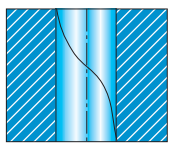

Off centre/Ovality

- Improve clamping (workpiece deformation).
- Check material allowance.
- Improve centring (part/tool).
- Check axial position of blade.

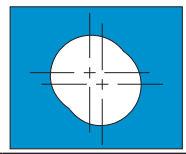

Tapered entry

- Reduce feed rate.
- Improve centring (part/tool).
- Reduce radial run-out.

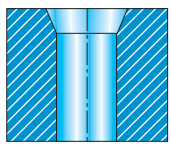

Tapered hole

- Improve centring (part/tool).

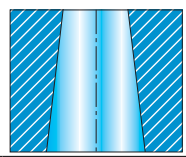

Deformed hole

- Improve clamping (workpiece deformation).

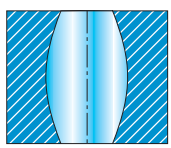

Curved hole

- Change blade (wrong lead geometry).
- Check axial position of blade.

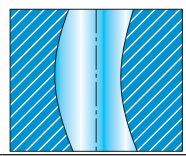

Too large diameter

- Improve centring (part/tool).
- Adjust diameter (too large).

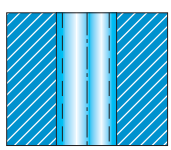

Adhesion to pads

- Improve coolant conditions (outlet type, pressure, quality).
- Adjust diameter (too small).





Xfix™	∅ Range	Reaming depth	Hole tolerance	Intermediate diameters	Surface finish
	39,500-154,500 mm	2,5–6,5 x D	IT 6	Yes, available through Custom Design	R_a 0,8–1,2 µm

Xfix™ is a specially developed Seco Reaming programme, dedicated for large ∅ 39,5 to 154,5 mm.
Design includes adjustable and indexable inserts to achieve IT 6 accurate tolerance, as well as a built in adjustable run-out adapter to guarantee component quality.
Multi-teeth construction and patented pre-loaded guiding pads offering maximum stability and productivity for large ∅ reaming operations.

Feature details

- 4 or 8 cutting edges for optimisation in all materials
- Stable clamping system
- Easy adjustment with 1 adjusting screw for easy setting
- Grade and geometry choice for different applications

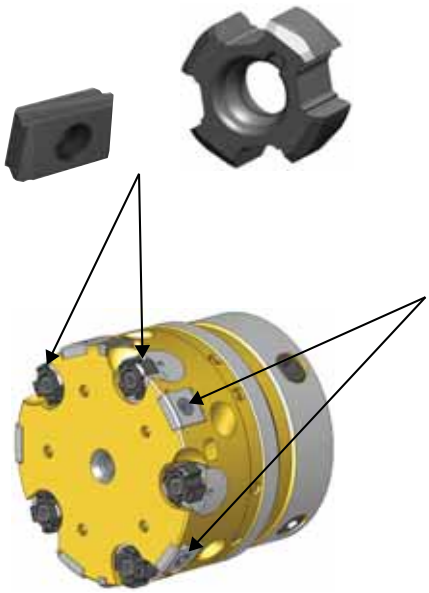



- Patended pre-loaded guiding pads system for application stability
- Pads lubrication for performance and safety

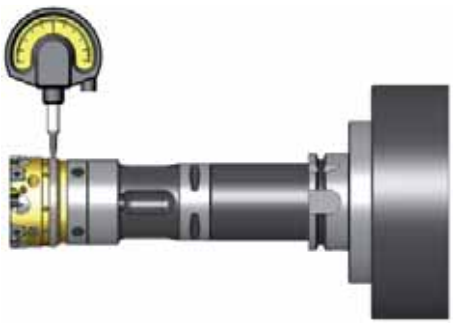

- Integrated adjustable adapter for perfect run-out control

- Shanks and extention programme from Seco
Tooling system catalogue offer maximum modularit



Code key – Adapters

Flange size		Length		Shank type
HF55	-	088	-	C5



Code key – Standard heads

Head type		Diameter and tolerance		Number of teeth		Flange size D
HF85	-	60H6	-	05	-	55



Code key – Heads Intermediate

Head type		Diameter and tolerance		Number of teeth		Flange size D
HF85	-	65,2G7	-	05	-	55

Head type information :
- HF85 , through bore, short chipping material
- HF85B, blind bore, short chipping material
- HF86, through bore , all material
- HF86B, blind bore, all material

Code key – Inserts

Insert size		Lead geometry		Rake angle		Grade
RNAX1005	-	EB45	-	03	-	RX2000



RNAX insert for HF85 & HF 85B Xfix heads

Code key – Inserts

Insert size		Lead geometry		Rake angle		Grade
LNEG1003	-	EB45	-	06	-	RX2000

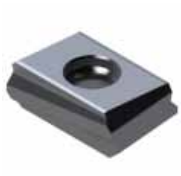

LNEG inserts for HF86 & HF86B Xfix heads

RNAX

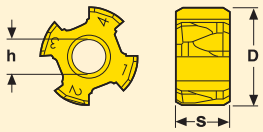

Size	Dimensions in mm		
	D	s	h
10	10	5,5	3,5

Inserts	Part No.	Grades		Rake angle
		RX1500	RX2000	
RNAX				
	RNAX1005-EB45-03	■	■	3 °
	RNAX1005-EB845-03	■	■	3 °
	RNAX1005-EB1570-03	■	■	3 °

LNEG

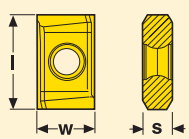

Size	Dimensions in mm		
	l	W	s
10	10	6,35	3,5

Inserts	Part No.	Grades			Rake angle
		RX1500	RX2000	CF	
LNEG					
	LNEG1003-EB45-03		■		3 °
	LNEG1003-EB45-06	■	■	■	6 °
	LNEG1003-EB845-03		■		3 °
	LNEG1003-EB845-06		■		6 °

■ Stock standard.
Subject to change refer to current price and stock-list.

Grades

	RX1500	Coated Cermet A wear resistant coated grade for performance optimization in steel and cast iron.
	RX2000	Coated High performance coated grade suitable for all materials.
	CF	Cermet A wear resistant grade for performance optimization in steel.

Applications

Lead geometry - EB45

Chip control +++
Surface Finish + (R_a 0,8 - 1,2 µm)
First choice geometry

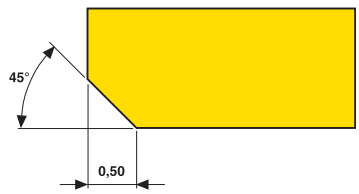

Lead geometry - EB845

Chip control ++
Surface finish+++ (R_a 0,2 - 0,8 µm)

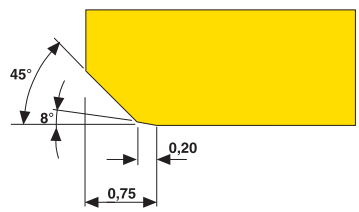

Lead geometry - EB1570

Chip control ++
Surface finish ++ (R_a 0,8 - 1,2 µm)
Stability for long reach application +++

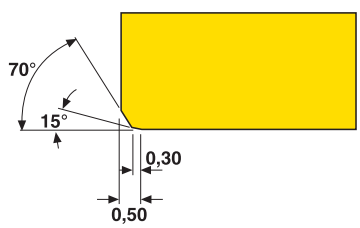

Heads for RNAX inserts, through bore ∅ 39,5 - 59,499

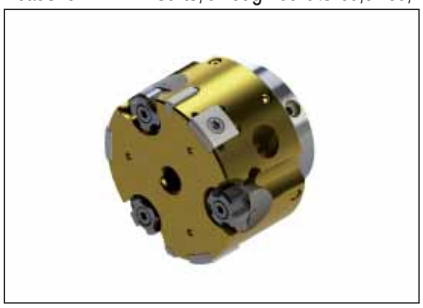

• For inserts, grades and geometries see page 423-424.

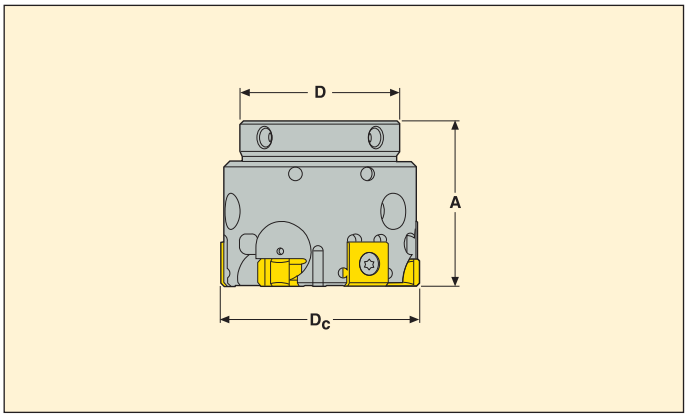

D_c	Part No.	Dimensions in mm A	Dimensions in mm D		KG	Insert	Geometries EB45	Geometries EB845	Geometries EB1570	Grades RX2000	Grades RX1500
39,5-44,499	HF85....03-32	33	32	3	0,41	RNAX1005....	■	■	■	■	■
44,5-49,499	HF85....03-32	33	32	3	0,51						
49,5-54,499	HF85....03-32	33	32	3	0,62						
54,5-59,499	HF85....03-32	33	32	3	0,74						

Spare parts

Insert screw	Clamp screw	Cartridge	Wedge clamp	Adjusting screw	Setting screw radial
					
C03010-T09P	LDH4010	CARTCY-HF16	B6027	SH4075S	HCM4 x 08
Torque key	Torque key			Key (Flag)	Setting key
					
T00-09P20*	H00-2020*			H2.0-2D	2SMS795
Clamping torque (Nm)	Clamping torque (Nm)				
2	2				

* To be ordered separately.
■ Stock standard.

Heads for RNAX inserts, blind bore ∅ 39,5 - 59,499

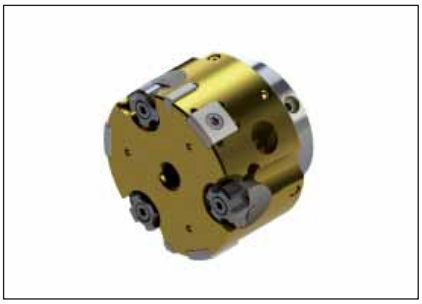

• For inserts, grades and geometries see page 423-424.

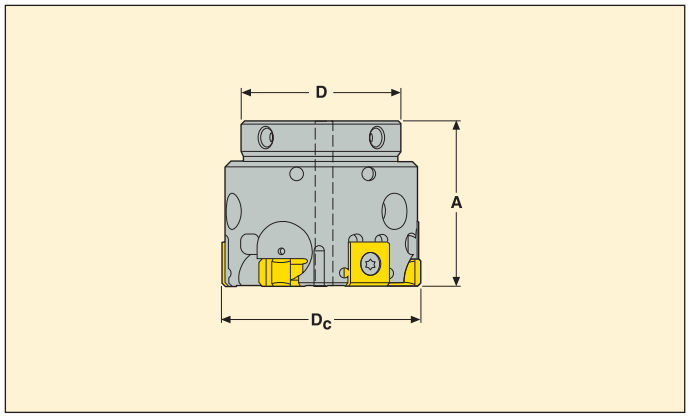

D_c	Part No.	Dimensions in mm A	Dimensions in mm D		KG	Insert	Geometries EB45	Geometries EB845	Geometries EB1570	Grades RX2000	Grades RX1500
39,5-44,499	HF85B....03-32	33	32	3	0.41	RNAX1005....	■	■	■	■	■
44,5-49,499	HF85B....03-32	33	32	3	0.51						
49,5-54,499	HF85B....03-32	33	32	3	0.62						
54,5-59,499	HF85B....03-32	33	32	3	0.74						

Spare parts

For ∅ (mm)	Insert screw	Clamp screw	Cartridge	Wedge clamp	Adjusting screw	Setting screw radial	Plug screw
39,5-44,499	C03010-T09P	LDH4010	CARTCY-HF16B	B6027	SH4075S	HCM4 x 08	3 x HCM3 x 03
44,5-59,499	C03010-T09P	LDH4010	CARTCY-HF16B	B6027	SH4075S	HCM4 x 08	HCM6 x 06
	Torque key	Torque key			Key (Flag)	Setting key	
	T00-09P20*	H00-2020*			H2.0-2D	2SMS795	
	Clamping torque (Nm)	Clamping torque (Nm)					
	2	2					

* To be ordered separately.
■ Stock standard.

Heads for LNEG inserts, through bore ∅ 39,5 - 59,499

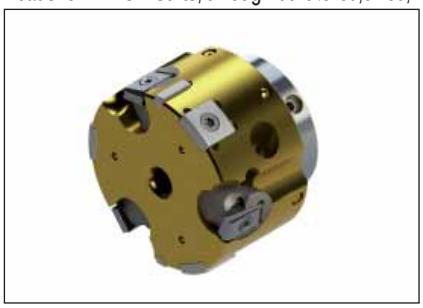

• For inserts, grades and geometries see page 423-424.

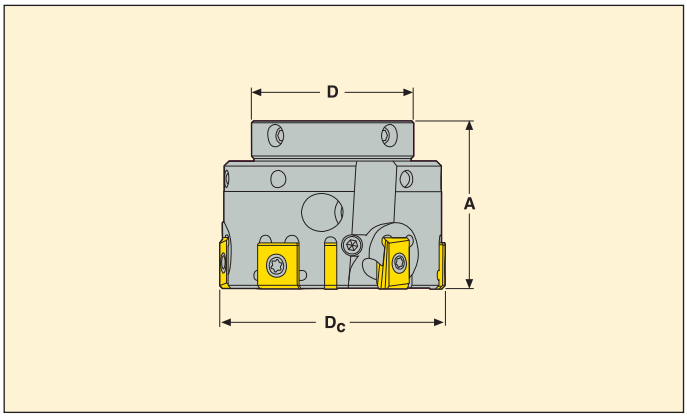

D_c	Part No.	Dimensions in mm A	Dimensions in mm D		KG	Insert	Geometries EB45	Geometries EB845	Geometries EB1570	Grades RX2000	Grades RX1500
39,5-44,499	HF86....03-32	33	32	3	0.41	LNEG1003....	■	■	■	■	■
44,5-49,499	HF86....03-32	33	32	3	0.51						
49,5-54,499	HF86....03-32	33	32	3	0.62						
54,5-59,499	HF86....03-32	33	32	3	0.74						

Spare parts

Insert screw	Clamp screw	Cartridge	Wedge clamp	Adjusting screw	Setting screw radial
					
C02506-T07P	LDH4010	CARTCY-LN16	B6027	SH4075S	HCM4 x 08
Torque key	Torque key			Key (Flag)	Setting key
					
T00-07P09*	H00-2020*			H2.0-2D	2SMS795
Clamping torque (Nm)	Clamping torque (Nm)				
0,9	2				

* To be ordered separately.
■ Stock standard.

Heads for LNEG inserts, blind bore ∅ 39,5 - 59,499

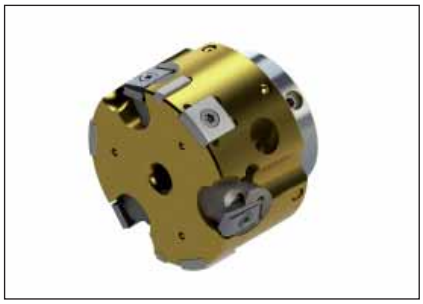

• For inserts, grades and geometries see page 423-424.

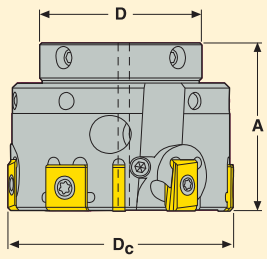

D_c	Part No.	Dimensions in mm A	Dimensions in mm D		KG	Insert	Geometries EB45	Geometries EB845	Geometries EB1570	Grades RX2000	Grades RX1500
39,5-44,499	HF86B....03-32	33	32	3	0.41	LNEG1003....	■	■	■	■	■
44,5-49,499	HF86B....03-32	33	32	3	0.51						
49,5-54,499	HF86B....03-32	33	32	3	0.62						
54,5-59,499	HF86B....03-32	33	32	3	0.74						

Spare parts

For ∅ (mm)	Insert screw	Clamp screw	Cartridge	Wedge calmp	Adjusting screw	Setting screw radial	Plug screw
39,5-44,499	C03010-T09P	LDH4010	CARTCY-LN16B	B6027	SH4075S	HCM4 x 08	3 x HCM3 x 03
44,5-59,499	C03010-T09P	LDH4010	CARTCY-LN16B	B6027	SH4075S	HCM4 x 08	HCM6 x 06
	Torque key	Torque key			Key (Flag)	Setting key	
	T00-09P20*	H00-2020*			H2.0-2D	2SMS795	
	Clamping torque (Nm)	Clamping torque (Nm)					
	2	2					

* To be ordered separately.
■ Stock standard.

Seco-Capto™ shank for ∅ 39,5 - 59,499



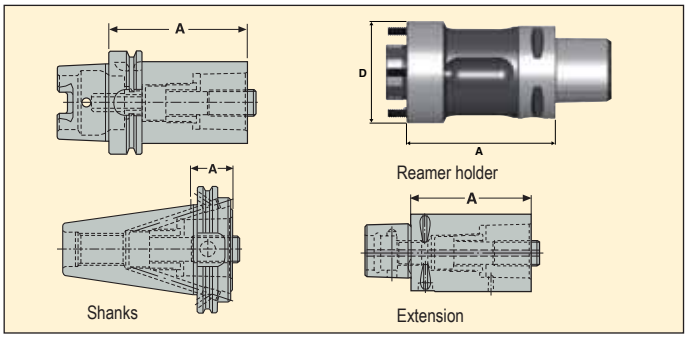

	Part No.	A	Custom design A min	Custom design A max	Taper	D	Assembly screw	KG
Reamer Holders	HF32-050-C3	50,0	–	–	C3	32	4 pieces CHC M3X16	0,258
	HF32...HSKA63	–	65	245	HSK-A63			
	HF32...HSKA80	–	100	209	HSK-A80			
	HF32...HSKA100	–	70	245	HSK-A100			
	HF32...DIN40 ADB	–	60	252	DIN40 ADB			
	HF32...DIN50 ADB	–	60	317	DIN50 ADB			
	HF32...BT40 ADB	–	65	252	BT40 ADB			
	HF32...BT50 ADB	–	75	317	BT50 ADB			

Shanks and extensions for HF32-050-C3 (see Seco Capto catalogue for more details).

	Part No.	A	Taper	Capto size	KG
Shank	C3-390.410-63075C	75,0	HSK-A63	C3	0.89
	C3-390.410-100080A	80,0	HSK-A100	C3	2.29
	C3-390.140-40030	30,0	DIN40 AD	C3	0.82
	C3-390.140-40060	60,0	DIN40 AD	C3	0.98
	C3-390.272-40030	30,0	DIN40 B	C3	0.81
	C3-390.272-40060	60,0	DIN40 B	C3	1.20
	C3-390.540-40030	30,0	DIN TF40 AD (Taper Face)	C3	0.84
	C3-390.55-40030	30,0	BT40 AD	C3	0.94
	C3-390.55-40060	60,0	BT40 AD	C3	1.20
	C3-390.369-40030	30,0	BT40 B	C3	0.93
	C3-390.555-40030	30,0	BT TF40 AD (Taper Face)	C3	0.95
	C3-390.140-50030	30,0	DIN50 AD	C3	2.63
	C3-390.140-50060	60,0	DIN50 AD	C3	2.74
	C3-390.272-50030	30,0	DIN50 B	C3	2.60
	C3-390.272-50060	60,0	DIN50 B	C3	2.80
	C3-390.540-50030A	30,0	DIN TF50 ADB (Taper Face)	C3	2.63
	C3-390.58-50040	40,0	BT50 ADB	C3	2.50
	C3-390.58-50070	70,0	BT50 ADB	C3	2.70
	C3-390.369-50040	40,0	BT50 B	C3	3.60

	Part No.	A	Taper	Capto size	KG
Extension	C3-391.01-32060A	60,0	C3	C3	0.34
	C3-391.01-32080A	80,0	C3	C3	0.45
	C4-391.02-32055A	55,0	C3	C4	0.42
	C4-391.02-32070A	70,0	C3	C4	0.56
	C5-391.02-32060A	60,0	C3	C5	0.64
	C6-391.02-32070A	70,0	C3	C6	1.06
	C8-391.02-32060A	60,0	C3	C8	1.72

Graflex® shank for ∅ 39,5 - 59,499



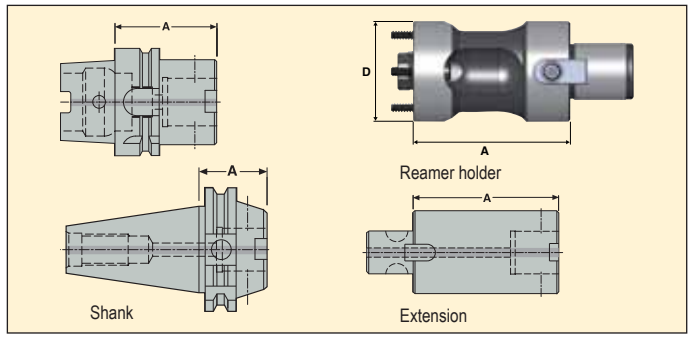

	Part No.	A	Custom design A min	Custom design A max	Taper	D	Assembly screw	KG
Reamer Holders	HF32-050-G3	50,0	–	–	G3	32	4 pieces CHC M3X16	0.32
	HF32...HSKA63	–	65	245	HSK-A63			–
	HF32...HSKA80	–	100	209	HSK-A80			–
	HF32...HSKA100	–	70	245	HSK-A100			–
	HF32...DIN40 ADB	–	60	252	DIN40 ADB			–
	HF32...DIN50 ADB	–	60	317	DIN50 ADB			–
	HF32...BT40 ADB	–	65	252	BT40 ADB			–
	HF32...BT50 ADB	–	75	317	BT50 ADB			–

Shanks and extensions for HF32-050-G3 (see Seco Tooling System for more details).

	Part No.	A	Taper	Graflex size	KG
Shank	EM93044011850	50,0	HSK-A63	G3	0.73
	EM93064011855	55,0	HSK-A100	G3	2.10
	EM34694011835	35,0	DIN40 ADB	G3	0.91
	EM346940118100	100,0	DIN40 ADB	G3	1.22
	EM34144011840	40,0	BT40 ADB	G3	1.06
	EM341440118100	100,0	BT40 ADB	G3	1.31
	EM34714011835	35,0	DIN50 ADB	G3	2.67
	EM34164011845	45,0	BT50 ADB	G3	3.58
	EM341640118120	120,0	BT50 ADB	G3	3.90

	Part No.	A	Taper	Graflex size	KG
Extension	M402330	40,0	G3	G3	0.23
	M402331	60,0	G3	G3	0.36

Heads for RNAX inserts, through bore ∅ 59,5 - 84,499



• For inserts, grades and geometries see page 423-424.

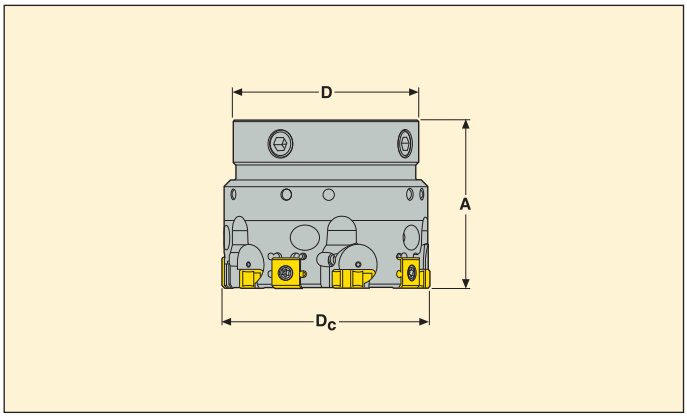

D_c	Part No.	Dimensions in mm A	Dimensions in mm D		KG	Insert	Geometries EB45	Geometries EB845	Geometries EB1570	Grades RX2000	Grades RX1500
59,5-64,499	HF85....05-55	50	55	5	1.30	RNAX1005....	■	■	■	■	■
64,5-69,499	HF85....05-55	50	55	5	1.50						
65,5-74,499	HF85....05-55	50	55	5	1.75						
74,5-79,499	HF85....05-55	50	55	5	2.00						
79,5-84,499	HF85....05-55	50	55	5	2.20						

Spare parts

Insert screw	Clamp screw	Cartridge	Wedge clamp	Adjusting screw	Setting screw radial
					
C03010-T09P	LDH4012	CARTCY-HF20	B6027	SH4075S	HCM8 x 12
Torque key	Torque key			Key (Flag)	Setting key
					
T00-09P20*	H00-2020*			H2.0-2D	4SMS795
Clamping torque (Nm)	Clamping torque (Nm)				
2	2				

■ Stock standard.

* To be ordered separately.

Heads for RNAX inserts, blind bore ∅ 59,5 - 84,499



• For inserts, grades and geometries see page 423-424.

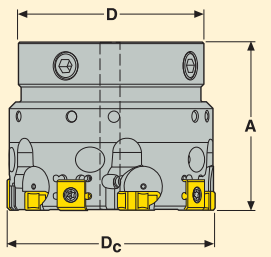

D_c	Part No.	Dimensions in mm A	Dimensions in mm D		KG	Insert	Geometries EB45	Geometries EB845	Geometries EB1570	Grades RX2000	Grades RX1500
59,5-64,499	HF85B....05-55	50	55	5	1.30	RNAX1005....	■	■	■	■	■
64,5-69,499	HF85B....05-55	50	55	5	1.50						
65,5-74,499	HF85B....05-55	50	55	5	1.75						
74,5-79,499	HF85B....05-55	50	55	5	2.00						
79,5-84,499	HF85B....05-55	50	55	5	2.20						

Spare Parts, Parts included in delivery

Insert screw	Clamp screw	Cartridge	Wedge clamp	Adjusting screw	Adjusting screw	Setting screw radial
						
C02506-T09P	LDH4012	CARTCY-HF20B	B6027	SH4075S	HCM8 x 12	HCM10 x 10
Torque key	Torque key			Key (Flag)	Setting key	
						
T00-09P20*	H00-2020*			H2.0-2D	4SMS795	
Clamping torque (Nm)	Clamping torque (Nm)					
2	2					

■ Stock standard.

* To be ordered separately.

Heads for LNEG inserts, through bore ∅ 59,5 - 84,499

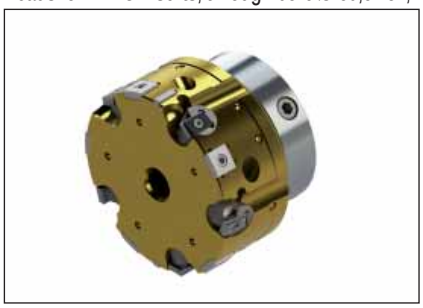

• For inserts, grades and geometries see page 423-424.

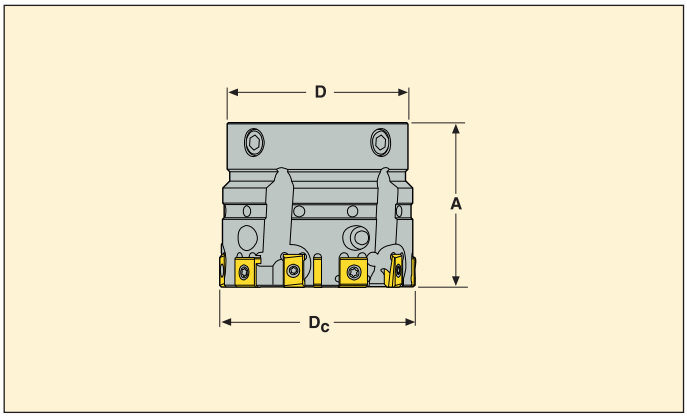

D_c	Part No.	Dimensions in mm A	Dimensions in mm D		KG	Insert	Geometries EB45	Geometries EB845	Geometries EB1570	Grades RX2000	Grades RX1500
59,5-64,499	HF86....05-55	50	55	5	1.30	LNEG1003....	■	■	■	■	■
64,5-69,499	HF86....05-55	50	55	5	1.50						
65,5-74,499	HF86....05-55	50	55	5	1.75						
74,5-79,499	HF86....05-55	50	55	5	2.00						
79,5-84,499	HF86....05-55	50	55	5	2.20						

Spare parts

Insert screw	Clamp screw	Cartridge	Wedge clamp	Adjusting screw	Setting screw radial
					
C02506-T07P	LDH4012	CARTCY-LN20	B6027	SH4027S	HCM8 x 12
Torque key	Torque key			Key (Flag)	Setting key
					
T00-09P20*	H00-2020*			H2.0-2D	4SMS795
Clamping torque (Nm)	Clamping torque (Nm)				
0,9	2				

■ Stock standard.

* To be ordered separately.

Heads for LNEG inserts, blind bore ∅ 59,5 - 84,499

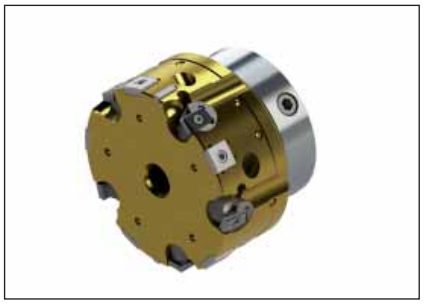

• For inserts, grades and geometries see page 423-424.

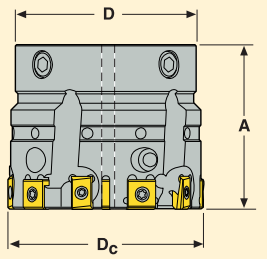

D_c	Part No.	Dimensions in mm A	Dimensions in mm D		KG	Insert	Geometries EB45	Geometries EB845	Geometries EB1570	Grades RX2000	Grades RX1500
59,5-64,499	HF86B....05-558	50	55	5	1.30	LNEG1003....	■	■	■	■	■
64,5-69,499	HF86B....05-558	50	55	5	1.50						
65,5-74,499	HF86B....05-558	50	55	5	1.75						
74,5-79,499	HF86B....05-558	50	55	5	2.00						
79,5-84,499	HF86B....05-558	50	55	5	2.20						

Spare Parts, Parts included in delivery

Insert screw	Clamp screw	Cartridge	Wedge clamp	Adjusting screw	Setting screw radial	Plug screw
						
C02506-T07P	LDH4010	CARTCY-LN20B	B6027	SH4075S	HCM8 x 12	HCM10 x 10
Torque key	Torque key			Key (Flag)	Setting key	
						
T00-07P09*	H00-2020*			H2.0-2D	4SMS795	
Clamping torque (Nm)	Clamping torque (Nm)					
0,9	2					

■ Stock standard.
* To be ordered separately.

Seco-Capto™ shank for ∅ 59,5 - 84,499



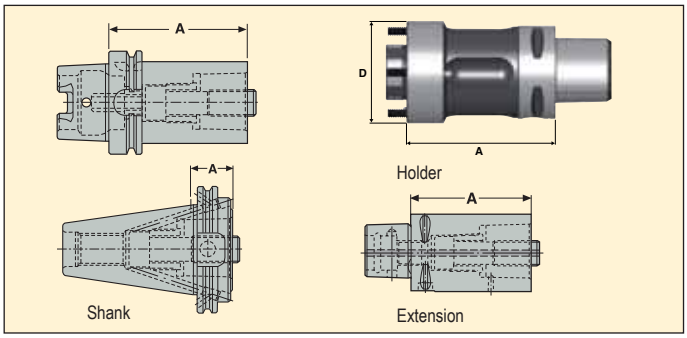

	Part No.	A	Custom design A min	Custom design A max	Taper	D	Assembly screw	KG
Reamer Holders	HF55-080-C5	80,0	–	–	C5	55	4 pieces CHC M5X25	1.42
	HF55...HSKA63	–	80	239	HSK-A63			–
	HF55...HSKA80	–	100	239	HSK-A80			–
	HF55...HSKA100	–	100	239	HSK-A100			–
	HF55...DIN69871/40	–	80	239	DIN6971/40			–
	HF55...DIN69871/50	–	80	304	DIN6971/50			–
	HF55...BT40 ADB	–	80	239	BT40 ADB			–
	HF55...BT50 ADB	–	80	304	BT50 ADB			–

Shanks and extensions for HF55-080-C5 (see Seco Capto catalogue for more details).

	Part No.	A	Taper	Capto size	KG
Shank	C5-390.410-63090C	90,0	HSK-A63	C5	1.40
	C5-390.410-100100A	100,0	HSK-A100	C5	2.89
	C5-390.140-40030	30,0	DIN40 AD	C5	0.77
	C5-390.140-40070	70,0	DIN40 AD	C5	1.34
	C5-390.272-40040	40,0	DIN40 B	C5	0.90
	C5-390.272-40080	80,0	DIN40 B	C5	1.48
	C5-390.540-40050	50,0	DIN TF40 AD (Taper Face)	C5	1.08
	C5-390.55-40030	30,0	BT40 AD	C5	0.82
	C5-390.55-40070	70,0	BT40 AD	C5	1.39
	C5-390.369-40050	50,0	BT40 B	C5	1.09
	C5-390.555-40050	50,0	BT TF40 AD (Taper Face)	C5	1.11
	C5-390.140-50030	30,0	DIN50 AD	C5	2.58
	C5-390.140-50070	70,0	DIN50 AD	C5	3.08
	C5-390.272-50030	30,0	DIN50 B	C5	2.76
	C5-390.272-50070	70,0	DIN50 B	C5	3.30
	C5-390.540-50030A	30,0	DIN TF50 ADB (Taper Face)	C5	2.59
	C5-390.58-50040	40,0	BT50 AD	C5	3.42
	C5-390.58-50080	80,0	BT50 AD	C5	3.94
	C5-390.369-50040	40,0	BT50 B	C5	1.25
	C5-390.558-50040	40,0	BT TF50 AD (Taper Face)	C5	3.46

	Part No.	A	Taper	Capto size	KG
Extension	C5-391.01-50080A	80,0	C5	C5	1.11
	C5-391.01-50100A	100,0	C5	C5	1.39
	C6-391.02-50080A	80,0	C5	C6	1.45
	C6-391.02-50110A	110,0	C5	C6	2.15
	C8-391.02-50080A	80,0	C5	C8	2.20

Graflex® shank for ∅ 59,5 - 84,499



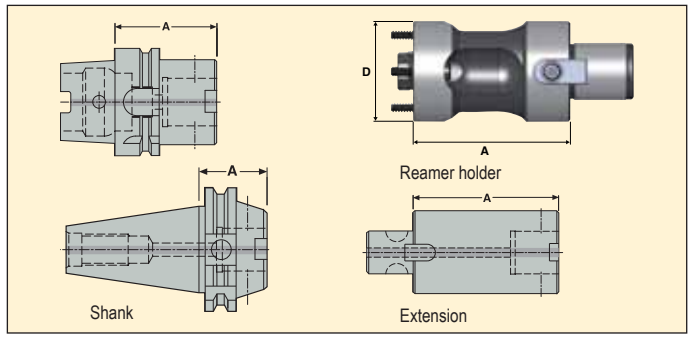

	Part No.	A	Custom design A min	Custom design A max	Taper	D	Assembly screw	KG
Reamer Holders	HF55-080-G5	80,0	–	–	G5	55	4 pieces CHC M5X25	1.28
	HF55...HSKA63	–	80	239	HSK-A63			–
	HF55...HSKA80	–	100	239	HSK-A80			–
	HF55...HSKA100	–	100	239	HSK-A100			–
	HF55...DIN69871/40	–	80	239	DIN6971/40			–
	HF55...DIN69871/50	–	80	304	DIN6971/50			–
	HF55...BT40 ADB	–	80	239	BT40 ADB			–
	HF55...BT50 ADB	–	80	304	BT50 ADB			–

Shanks and extensions for HF55-080-G5 (see Seco Tooling System for more details).

	Part No.	A	Taper	Graflex size	KG
Shank	EM93044012860	60,0	HSK-A63	G5	0.98
	EM930440128100	100,0	HSK-A63	G5	1.57
	EM930440128140	140,0	HSK-A63	G5	2.18
	EM93064012865	65,0	HSK-A100	G5	2.36
	EM930640128110	110,0	HSK-A100	G5	3.02
	EM930640128150	150,0	HSK-A100	G5	3.68
	EM34694012840	40,0	DIN40 ADB	G5	0.92
	EM34694012880	80,0	DIN40 ADB	G5	1.49
	EM346940128120	120,0	DIN40 ADB	G5	2.08
	EM34144012845	45,0	BT40 ADB	G5	1.11
	EM34144012880	80,0	BT40 ADB	G5	1.54
	EM341440128120	120,0	BT40 ADB	G5	2.12
	EM34714012840	40,0	DIN50 ADB	G5	2.75
	EM44684012840	40,0	DIN50 AD/ CAT50	G5	3.00
	EM341640128100	100,0	BT50 ADB	G5	4.22
	EM34164012855	55,0	BT50 ADB	G5	3.96
	EM341640128140	140,0	BT50 ADB	G5	4.80

	Part No.	A	Taper	Graflex size	KG
Extension	M402550	50,0	G5	G5	0.72
	M402551	75,0	G5	G5	1.11
	M402552	100,0	G5	G5	1.48

Heads for RNAX inserts, through bore ∅ 84,5 - 119,499

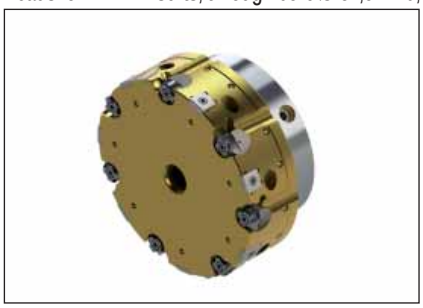

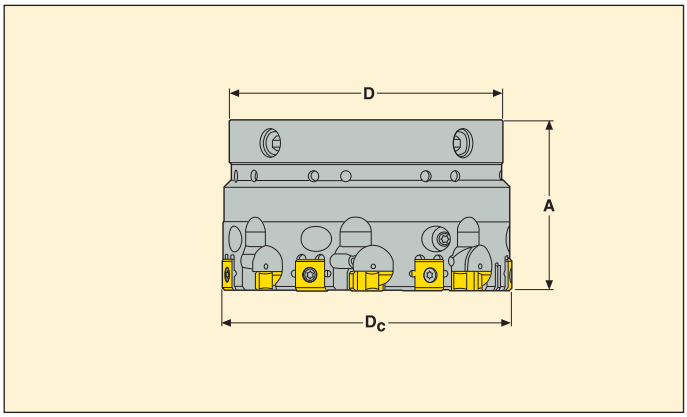

• For inserts, grades and geometries see page 423-424.

D_c	Part No.	Dimensions in mm A	Dimensions in mm D		KG	Insert	Geometries EB45	Geometries EB845	Geometries EB1570	Grades RX2000	Grades RX1500
84,5-89,499	HF85....07-80	50	80	7	1.68	RNAX1005....	■	■	■	■	■
89,5-94,499	HF85....07-80	50	80	7	1.85						
94,5-99,499	HF85....07-80	50	80	7	2.02						
99,5-104,499	HF85....07-80	50	80	7	2.20						
104,5-109,499	HF85....07-80	50	80	7	2.40						
109,5-114,499	HF85....07-80	50	80	7	2.61						
114,5-119,499	HF85....07-80	50	80	7	2.82						

Spare Parts, Parts included in delivery

Insert screw	Clamp screw	Cartridge	Wedge clamp	Adjusting screw	Setting screw radial
					
C03010-T09P	LDH4012	CARTCY-HF20	B6027	SH4075S	HCM8 x 16
Torque key	Torque key			Key (Flag)	Setting key
					
T00-09P20*	H00-2020*			H2.0-2D	4SMS795
Clamping torque (Nm)	Clamping torque (Nm)				
2	2				

■ Stock standard.
* To be ordered separately.

Heads for RNAX inserts, blind bore ∅ 84,5 - 119,499

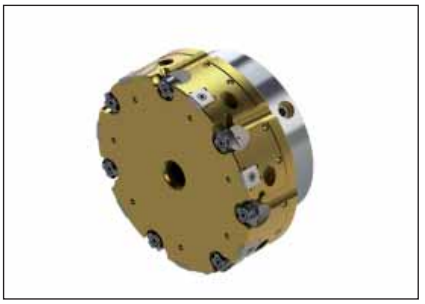

• For inserts, grades and geometries see page 423-424.

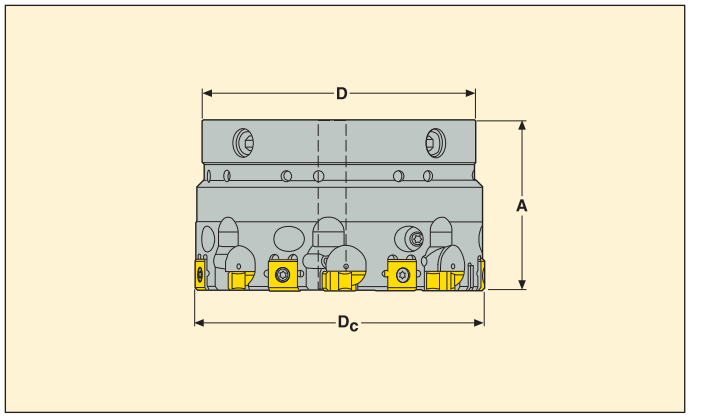

D_c	Part No.	Dimensions in mm A	Dimensions in mm D		KG	Insert	Geometries EB45	Geometries EB845	Geometries EB1570	Grades RX2000	Grades RX1500
84,5-89,499	HF85B....07-80	50	80	7	1.68	RNAX1005....	■	■	■	■	■
89,5-94,499	HF85B....07-80	50	80	7	1.85						
94,5-99,499	HF85B....07-80	50	80	7	2.02						
99,5-104,499	HF85B....07-80	50	80	7	2.20						
104,5-109,499	HF85B....07-80	50	80	7	2.40						
109,5-114,499	HF85B....07-80	50	80	7	2.61						
114,5-119,499	HF85B....07-80	50	80	7	2.82						

Spare Parts, Parts included in delivery

Insert screw	Clamp screw	Cartridge	Wedge clamp	Adjusting screw	Setting screw radial	Plug screw
						
C03010-T09P	LDH4012	CARTCY-HF20B	B6027	SH4075S	HCM8 x 16	HCM12 x 10
Torque key 	Torque key 			Key (Flag) 	Setting key 	
T00-09P20*	H00-2020*			H2.0-2D	4SMS795	
Clamping torque (Nm)	Clamping torque (Nm)					
2	2					

■ Stock standard.
* To be ordered separately.

Heads for LNEG inserts, through bore ∅ 84,5 - 119,499

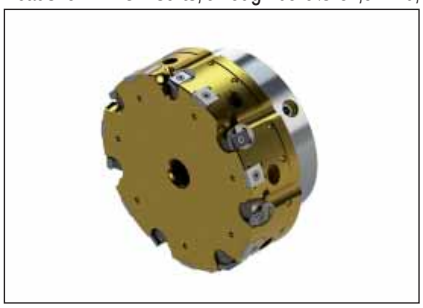

• For inserts, grades and geometries see page 423-424.

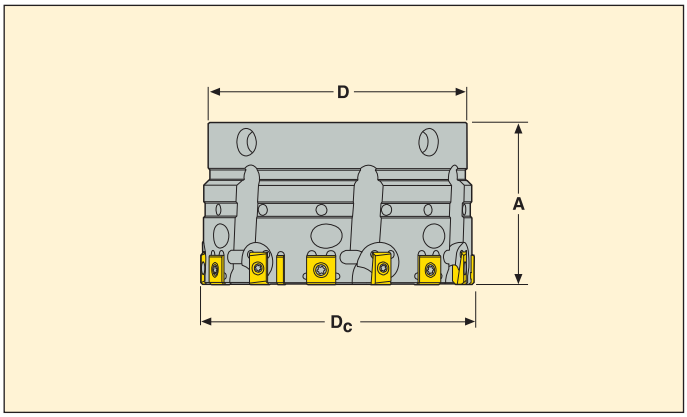

D_c	Part No.	Dimensions in mm A	Dimensions in mm D		KG	Insert	Geometries EB45	Geometries EB845	Geometries EB1570	Grades RX2000	Grades RX1500
84,5-89,499	HF86....07-80	50	80	7	1.68	LNEG1003....	■	■	■	■	■
89,5-94,499	HF86....07-80	50	80	7	1.85						
94,5-99,499	HF86....07-80	50	80	7	2.02						
99,5-104,499	HF86....07-80	50	80	7	2.20						
104,5-109,499	HF86....07-80	50	80	7	2.40						
109,5-114,499	HF86....07-80	50	80	7	2.61						
114,5-119,499	HF86....07-80	50	80	7	2.82						

Spare Parts, Parts included in delivery

Insert screw	Clamp screw	Cartridge	Wedge clamp	Adjusting screw	Setting screw radial
					
C02506-T07P	LDH4012	CARTCY-LN20	B6027	SH4075S	HCM8 x 16
Torque key	Torque key			Key (Flag)	Setting key
					
T00-07P09*	H00-2020*			H2.0-2D	4SMS795
Clamping torque (Nm)	Clamping torque (Nm)				
0,9	2				

■ Stock standard.
* To be ordered separately.

Heads for LNEG inserts, blind bore ∅ 84,5 - 119,499

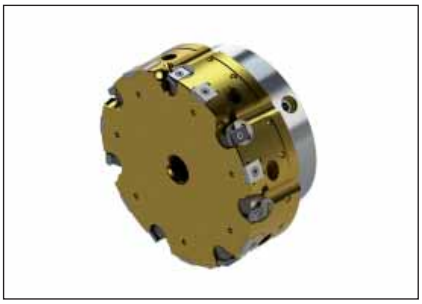

• For inserts, grades and geometries see page 423-424.

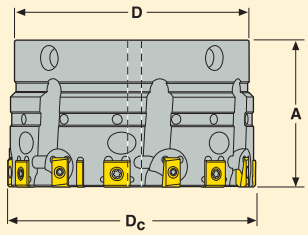

D_c	Part No.	Dimensions in mm A	Dimensions in mm D		KG	Insert	Geometries EB45	Geometries EB845	Geometries EB1570	Grades RX2000	Grades RX1500
84,5-89,499	HF86B....07-80	50	80	7	1.68						
89,5-94,499	HF86B....07-80	50	80	7	1.85						
94,5-99,499	HF86B....07-80	50	80	7	2.02						
99,5-104,499	HF86B....07-80	50	80	7	2.20	LNEG1003....	■	■	■	■	■
104,5-109,499	HF86B....07-80	50	80	7	2.40						
109,5-114,499	HF86B....07-80	50	80	7	2.61						
114,5-119,499	HF86B....07-80	50	80	7	2.82						

Spare Parts, Parts included in delivery

Insert screw	Clamp screw	Cartridge	Wedge clamp	Adjusting screw	Setting screw radial	Plug screw
						
C02506-T07P	LDH4012	CARTCY-LN20B	B6027	SH4075S	HCM8 x 16	HCM12 x 10
Torque key	Torque key			Key (Flag)	Setting key	
						
T00-07P09*	H00-2020*			H2.0-2D	4SMS795	
Clamping torque (Nm)	Clamping torque (Nm)					
0,9	2					

■ Stock standard.

* To be ordered separately.

Seco-Capto™ shank for ∅ 84,5 - 119,499



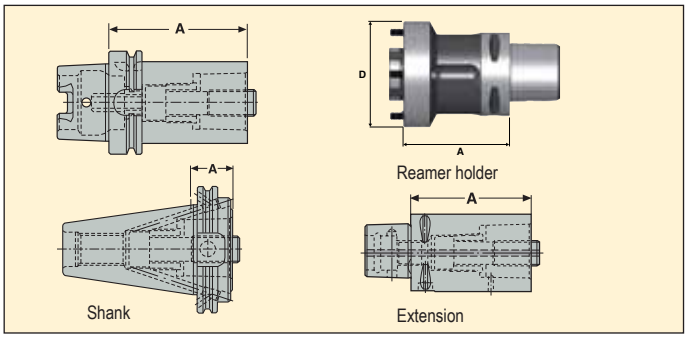

	Part No.	A	Custom design A min	Custom design A max	Taper	D	Assembly screw	KG
Reamer Holders								
	HF80-080-C6	80,0	–	–	C6	80	4 pieces CHC M6X25	2.43
	HF80...HSKA80	–	100	239	HSK-A80			–
	HF80...HSKA100	–	100	239	HSK-A100			–
	HF80...DIN699871/50	–	80	304	DIN69871/50			–
	HF80...BT50	–	80	304	BT50			–

Shanks and extensions for HF80-080-C6 (see Seco Capto catalogue for more details).

	Part No.	A	Taper	Capto size	KG
Shank					
	C6-390.410-100110A	110,0	HSK-A100	C6	3.56
	C6-390.140-40085	85,0	DIN40 AD	C6	1.80
	C6-390.272-40085	85,0	DIN40 B	C6	1.78
	C6-390.540-40085	85,0	DIN TF40 AD (Taper Face)	C6	1.82
	C6-390.140-50030	30,0	DIN50 AD	C6	2.49
	C6-390.140-50080	80,0	DIN50 AD	C6	3.58
	C6-390.272-50030	30,0	DIN50 B	C6	2.60
	C6-390.272-50080	80,0	DIN50 B	C6	3.70
	C6-390.540-50050A	50,0	DIN TF50 ADB (Taper Face)	C6	2.94
	C6-390.55-40075	75,0	BT40 AD	C6	2.68
	C6-390.555-40075	75,0	BT TF40 AD (Taper Face)	C6	1.70
	C6-390.58-50040	40,0	BT50 AD	C6	3.26
	C6-390.58-50090	90,0	BT50 AD	C6	4.35
	C6-390.369-50050	50,0	BT50 B	C6	3.44
	C6-390.558-50050	50,0	BT TF50 AD (Taper Face)	C6	3.66

	Part No.	A	Taper	Capto size	KG
Extension					
	C6-391.01-63100A	100,0	C6	C6	2.20
	C6-391.01-63140A	140,0	C6	C6	3.10
	C6-391.01-63060	60,0	C6	C6	1.30

Graflex® shank for ∅ 84,5 - 119,499



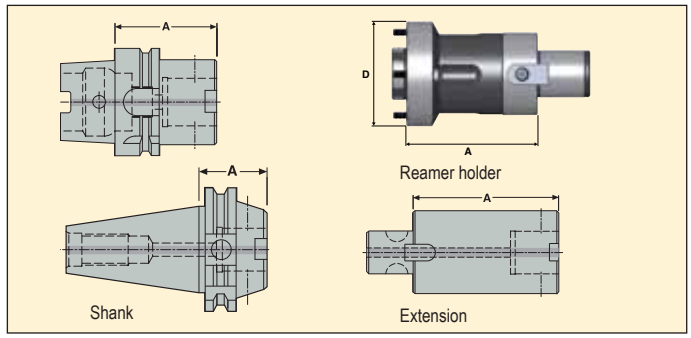

	Part No.	A	Custom design A min	Custom design A max	Taper	D	Assembly screw	KG
Reamer Holders								
	HF80-080-G6	80,0	–	–	G6	80	4 pieces CHC M6X25	2.91
	HF80...HSKA80	–	100	239	HSK-A80			–
	HF80...HSKA100	–	100	239	HSK-A100			–
	HF80...DIN699871/50	–	80	304	DIN69871/50			–
	HF80...BT50	–	80	304	BT50			–

Shanks and extensions for HF80-080-G6 (see Seco Tooling System for more details).

	Part No.	A	Taper	Graflex size	KG
Shank					
	EM93044013670	70,0	HSK-A63	G6	1.21
	EM930440136120	120,0	HSK-A63	G6	2.38
	EM930640136120	120,0	HSK-A100	G6	3.82
	EM930640136160	160,0	HSK-A100	G6	4.72
	EM34694013660	60,0	DIN40 ADB	G6	1.24
	EM346940136120	120,0	DIN40 ADB	G6	2.65
	EM44664013660	60,0	DIN40 AD/ CAT40	G6	1.21
	EM34144013650	50,0	BT40 ADB	G6	1.13
	EM341440136120	120,0	BT40 ADB	G6	2.78
	EM34714013645	45,0	DIN50 ADB	G6	2.88
	EM347140136100	100,0	DIN50 ADB	G6	4.08
	EM347140136140	140,0	DIN50 ADB	G6	4.99
	EM44684013645	45,0	DIN50 AD/ CAT50	G6	2.98
	EM446840136140	140,0	DIN50 AD/ CAT50	G6	5.10
	EM34164013663	63,0	BT50 ADB	G6	4.20
	EM341640136100	100,0	BT50 ADB	G6	4.57
	EM341640136140	140,0	BT50 ADB	G6	5.54

	Part No.	A	Taper	Graflex size	KG
Extension					
	M402660	60,0	G6	G6	1.38
	M402661	90,0	G6	G6	2.10
	M402662	120,0	G6	G6	2.81

Heads for RNAX inserts, through bore ∅ 119,5 - 154,499

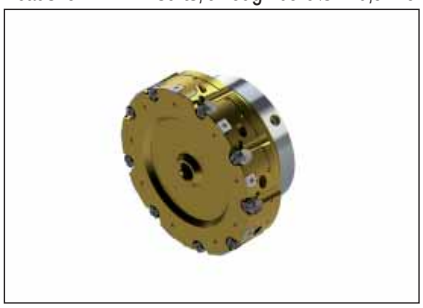

• For inserts, grades and geometries see page 423-424.

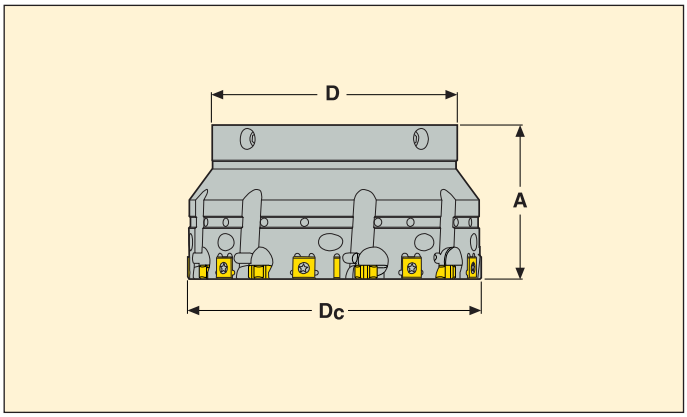

D_c	Part No.	Dimensions in mm A	Dimensions in mm D		KG	Insert	Geometries EB45	Geometries EB845	Geometries EB1570	Grades RX2000	Grades RX1500
119,5-124,499	HF85....09-100	63	100	9	3.89	RNAX1005....	■	■	■	■	■
124,5-129,499	HF85....09-100	63	100	9	4.15						
129,5-134,499	HF85....09-100	63	100	9	4.42						
134,5-139,499	HF85....09-100	63	100	9	4.70						
139,5-144,499	HF85....09-100	63	100	9	4.99						
144,5-149,499	HF85....09-100	63	100	9	5.29						
149,5-154,499	HF85....09-100	63	100	9	5.60						

Spare Parts, Parts included in delivery

Insert screw	Clamp screw	Cartridge	Wedge clamp	Adjusting screw	Setting screw radial
					
C03010-T09P	LDH4012	CARTCY-HF20	B6027	SH4075S	HCM8 x 20
Torque key	Torque key			Key (Flag)	Setting key
					
T00-09P20*	H00-2020*			H2.0-2D	4SMS795
Clamping torque (Nm)	Clamping torque (Nm)				
2	2				

■ Stock standard.
* To be ordered separately.

Heads for RNAX inserts, blind bore ∅ 119,5 - 154,499

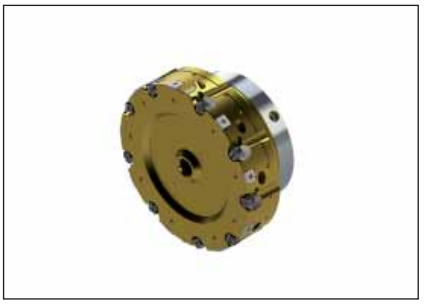

• For inserts, grades and geometries see page 423-424.

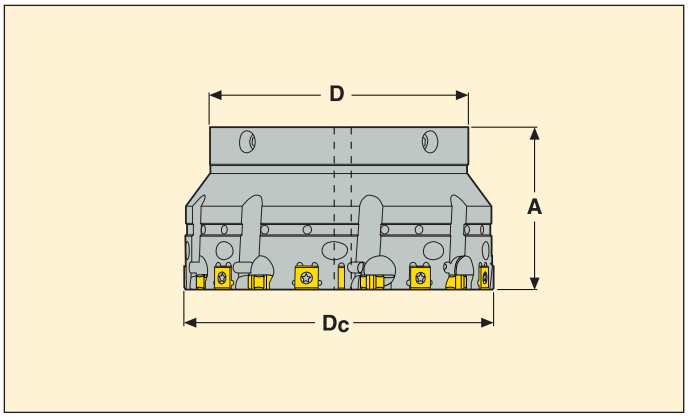

D_c	Part No.	Dimensions in mm A	Dimensions in mm D		KG	Insert	Geometries EB45	Geometries EB845	Geometries EB1570	Grades RX2000	Grades RX1500
119,5-124,499	HF85B....09-100	63	100	9	3.89	RNAX1005....	■	■	■	■	■
124,5-129,499	HF85B....09-100	63	100	9	4.15						
129,5-134,499	HF85B....09-100	63	100	9	4.42						
134,5-139,499	HF85B....09-100	63	100	9	4.70						
139,5-144,499	HF85B....09-100	63	100	9	4.99						
144,5-149,499	HF85B....09-100	63	100	9	5.29						
149,5-154,499	HF85B....09-100	63	100	9	5.60						

Spare Parts, Parts included in delivery

Insert screw	Clamp screw	Cartridge	Wedge clamp	Adjusting screw	Setting screw radial	Plug screw
						
C03010-T09P	LDH4012	CARTCY-HF20B	B6027	SH4075S	HCM8 x 20	HCM12 x 10
Torque key 	Torque key 			Key (Flag) 	Setting key 	
T00-09P20*	H00-2020*			H2.0-2D	4SMS795	
Clamping torque (Nm)	Clamping torque (Nm)					
2	2					

■ Stock standard.
* To be ordered separately.

Heads for LNEG inserts, through bore ∅ 119,5 - 154,499



• For inserts, grades and geometries see page 423-424.

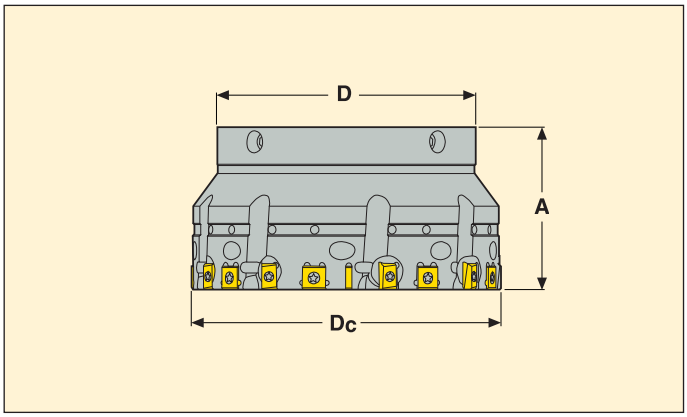

D_c	Part No.	Dimensions in mm A	Dimensions in mm D		KG	Insert	Geometries EB45	Geometries EB845	Geometries EB1570	Grades RX2000	Grades RX1500
119,5-124,499	HF86....09-100	63	100	9	3.89	LNEG1003....	■	■	■	■	■
124,5-129,499	HF86....09-100	63	100	9	4.15						
129,5-134,499	HF86....09-100	63	100	9	4.42						
134,5-139,499	HF86....09-100	63	100	9	4.70						
139,5-144,499	HF86....09-100	63	100	9	4.99						
144,5-149,499	HF86....09-100	63	100	9	5.29						
149,5-154,499	HF86....09-100	63	100	9	5.60						

Spare Parts, Parts included in delivery

Insert screw	Clamp screw	Cartridge	Wedge clamp	Adjusting screw	Setting screw radial
					
C02506-T07P	LDH4012	CARTCY-LN20	B6027	SH4075S	HCM8 x 20
Torque key	Torque key			Key (Flag)	Setting key
					
T00-07P09*	H00-2020*			H2.0-2D	4SMS795
Clamping torque (Nm)	Clamping torque (Nm)				
0,9	2				

■ Stock standard.
* To be ordered separately.

Heads for LNEG inserts, blind bore ∅ 119,5 - 154,499



• For inserts, grades and geometries see page 423-424.

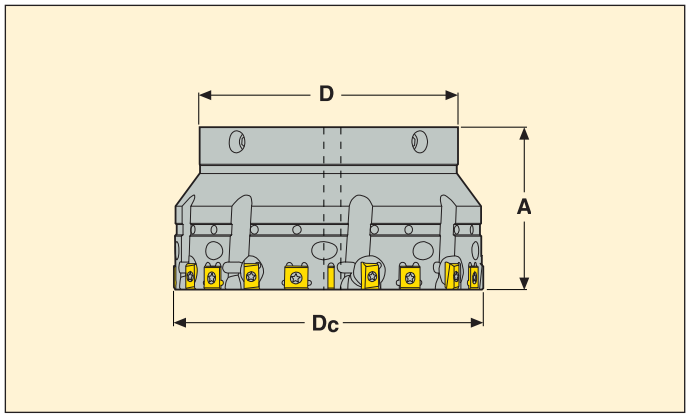

D_c	Part No.	Dimensions in mm A	Dimensions in mm D		KG	Insert	Geometries EB45	Geometries EB845	Geometries EB1570	Grades RX2000	Grades RX1500
119,5-124,499	HF86B....09-100	63	100	9	3.89						
124,5-129,499	HF86B....09-100	63	100	9	4.15						
129,5-134,499	HF86B....09-100	63	100	9	4.42						
134,5-139,499	HF86B....09-100	63	100	9	4.70	LNEG1003....	■	■	■	■	■
139,5-144,499	HF86B....09-100	63	100	9	4.99						
144,5-149,499	HF86B....09-100	63	100	9	5.29						
149,5-154,499	HF86B....09-100	63	100	9	5.60						

Spare Parts, Parts included in delivery

Insert screw	Clamp screw	Cartridge	Wedge clamp	Adjusting screw	Setting screw radial	Plug screw
						
C02506-T07P	LDH4012	CARTCY-LN20B	B6027	SH4075S	HCM8 x 20	HCM12 x 10
Torque key	Torque key			Key (Flag)	Setting key	
						
T00-07P09*	H00-2020*			H2.0-2D	4SMS795	
Clamping torque (Nm)	Clamping torque (Nm)					
0,9	2					

■ Stock standard.
* To be ordered separately.

Seco-Capto™ shank for ∅ 119,5 - 154,499



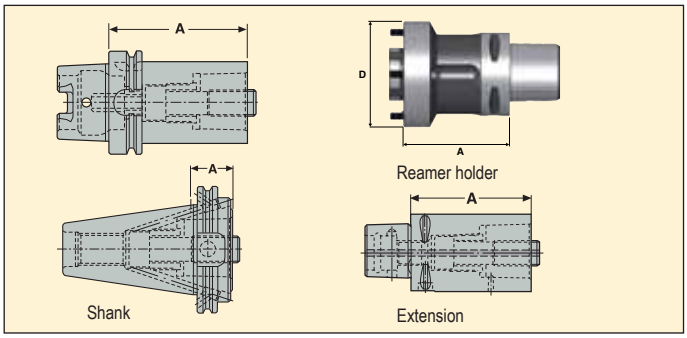

	Part No.	A	Custom design A min	Custom design A max	Taper	D	Assembly screw	KG
Reamer Holders								
	HF100-100-C8	100,0	–	–	C8	100	4 pieces CHC M8X30	4.84
	HF100...HSKA80	–	100	238	HSK-A80			–
	HF100...HSKA100	–	100	238	HSK-A100			–
	HF100...DIN6987/50	–	100	238	DIN50 ADB			–
	HF100...BT50	–	100	238	BT50 ADB			–

Shanks and extensions for HF100-100-C8 (see Seco Capto catalogue for more details).

	Part No.	A	Taper	Capto size	KG
Shank					
	C8-390.410-100120A	120,0	HSK-A100	C8	4.72
	C8-390.140-50070	70,0	DIN50 AD	C8	3.70
	C8-390.140-50120	120,0	DIN50 AD	C8	5.54
	C8-390.272-50070	70,0	DIN50 B	C8	3.68
	C8-390.272-50120	120,0	DIN50 B	C8	5.52
	C8-390.540-50070A	70,0	DIN TF50 ADB (Taper Face)	C8	3.72
	C8-390.58-50070	70,0	BT50 AD	C8	3.98
	C8-390.58-50120	120,0	BT50 AD	C8	5.82
	C8-390.369-50070	70,0	BT50 B	C8	3.94
	C8-390.558-50070	70,0	BT TF50 AD (Taper Face)	C8	4.02

	Part No.	A	Taper	Capto size	KG
Extension					
	C8-391.01-80100A	100,0	C8	C8	3.62
	C8-391.01-80125A	125,0	C8	C8	4.54

Graflex® shank for ∅ 119,5 - 154,499



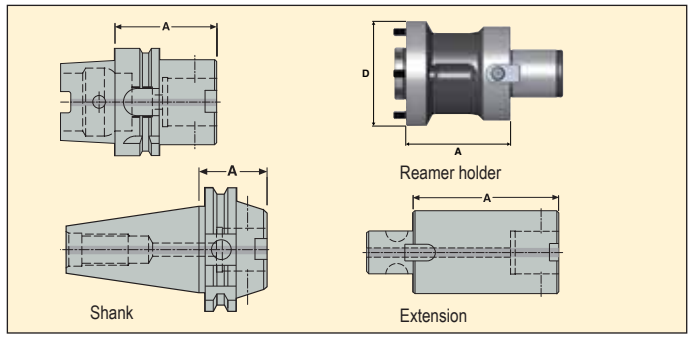

	Part No.	A	Custom design A min	Custom design A max	Taper	D	Assembly screw	KG
Reamer Holders								
	HF100-100-G7	100,0	–	–	G7	100		5.12
	HF100...HSKA80	–	100	238	HSK-A80		4 pieces CHC M8X30	–
	HF100...HSKA100	–	100	238	HSK-A100			–
	HF100...DIN6987/50	–	100	238	DIN50 ADB			–
	HF100...BT50	–	100	238	BT50 ADB			–

Shanks and extensions for HF100-100-G7 (see Seco Tooling System for more details).

	Part No.	A	Taper	Graflex size	KG
Shank					
	EM93064014685	85,0	HSK-A100	G7	3.98
	EM930640146160	160,0	HSK-A100	G7	7.66
	EM930640146240	240,0	HSK-A100	G7	11.58
	EM34714014650	50,0	DIN50 ADB	G7	3.23
	EM347140146120	120,0	DIN50 ADB	G7	6.48
	EM347140146200	200,0	DIN50 ADB	G7	10.30
	EM44684014665	65,0	DIN50 AD/ CAT50	G7	3.74
	EM34164014665	65,0	BT50 ADB	G7	4.30
	EM341640146120	120,0	BT50 ADB	G7	6.80
	EM341640146200	200,0	BT50 ADB	G7	10.70

	Part No.	A	Taper	Graflex size	KG
Extension					
	M402770	60,0	G7	G7	2.83
	M402771	90,0	G7	G7	4.30
	M402772	120,0	G7	G7	5.78

Custom design – No waiting for quotation - Short delivery time

Custom Design is also available for Xfix reamers and tool holders.
You can now quote for your own intermediate ∅ reamer and tailor made Xfix tool holder using the Seco Custom Design software.
Easy to use concept: Just indicate component min/max ∅ or use ISO tolerance system available in the software.
Xfix head designation is created automatically.
Custom Design gives you a number of advantages:

- No waiting for quotation! Price and delivery time is available instantly!
- Directly visualize your needs. No risk for misunderstandings.
- Short delivery time.

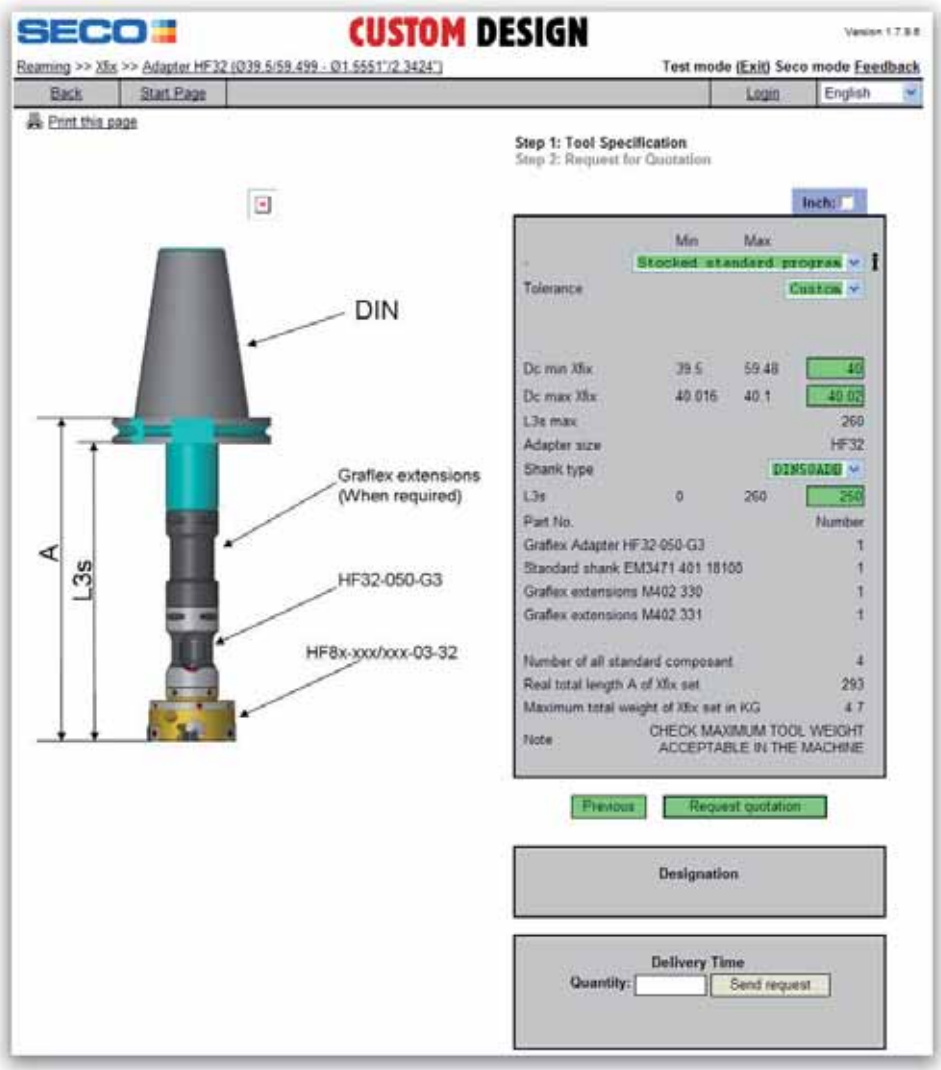

Cutting data – LNEG...-EB45

SMG		a_p (Ø)	f				V_c		
			z=3	z=5	z=7	z=9	RX2000	CF	RX1500
P1	LNEG1003-EB45	0,15-0,25	0,15-0,45	0,25-0,75	0,25-1,05	0,45-1,35	120 (80 - 200)	180 (120 - 250)	220 (120 - 300)
P2	LNEG1003-EB45	0,15-0,25	0,15-0,45	0,25-0,75	0,25-1,05	0,45-1,35	120 (80 - 200)	180 (120 - 250)	220 (120 - 300)
P3	LNEG1003-EB45	0,15-0,25	0,15-0,45	0,25-0,75	0,25-1,05	0,45-1,35	120 (80 - 200)	180 (120 - 250)	220 (120 - 300)
P4	LNEG1003-EB45	0,15-0,25	0,15-0,45	0,25-0,75	0,25-1,05	0,45-1,35	60 (40-120)	80 (60-150)	100 (80-200)
P5	LNEG1003-EB45	0,15-0,25	0,15-0,45	0,25-0,75	0,25-1,05	0,45-1,35	60 (40-120)	80 (60-150)	100 (80-200)
P6	LNEG1003-EB45	0,15-0,25	0,15-0,45	0,25-0,75	0,25-1,05	0,45-1,35	60 (40-120)	80 (60-150)	100 (80-200)
P7	LNEG1003-EB45	0,15-0,25	0,15-0,45	0,25-0,75	0,25-1,05	0,45-1,35	60 (40-120)	80 (60-150)	100 (80-200)
P8	LNEG1003-EB45	0,15-0,25	0,15-0,45	0,25-0,75	0,25-1,05	0,45-1,35	40 (30-70)	60 (50-100)	80 (60-120)
P11	LNEG1003-EB45	0,15-0,25	0,15-0,45	0,25-0,75	0,25-1,05	0,45-1,35	40 (30-70)	60 (50-100)	80 (60-120)
M1	LNEG1003-EB45	0,10-0,20	0,15-0,30	0,25-0,50	0,35-0,70	0,45-0,90	35 (25-60)	-	-
M2	LNEG1003-EB45	0,10-0,20	0,15-0,30	0,25-0,50	0,35-0,70	0,45-0,90	35 (25-60)	-	-
M3	LNEG1003-EB45	0,10-0,20	0,15-0,30	0,25-0,50	0,35-0,70	0,45-0,90	35 (25-60)	-	-
M4	LNEG1003-EB45	0,10-0,20	0,15-0,30	0,25-0,50	0,35-0,70	0,45-0,90	25 (20-50)	-	-
M5	LNEG1003-EB45	0,10-0,20	0,15-0,30	0,25-0,50	0,35-0,70	0,45-0,90	25 (20-50)	-	-
K1	LNEG1003-EB45	0,20-0,50	0,15-0,45	0,25-0,75	0,25-1,05	0,45-1,35	100 (60-200)	-	220 (150-300)
K2	LNEG1003-EB45	0,20-0,50	0,15-0,45	0,25-0,75	0,25-1,05	0,45-1,35	50 (35-80)	-	70 (50-120)
K3	LNEG1003-EB45	0,20-0,50	0,15-0,45	0,25-0,75	0,25-1,05	0,45-1,35	100 (60-200)	-	220 (150-300)
K4	LNEG1003-EB45	0,20-0,50	0,15-0,45	0,25-0,75	0,25-1,05	0,45-1,35	70 (50-120)	100 (60-120)	150 (110-200)
K5	LNEG1003-EB45	0,20-0,50	0,15-0,45	0,25-0,75	0,25-1,05	0,45-1,35	70 (50-120)	100 (60-120)	150 (110-200)
K6	LNEG1003-EB45	0,20-0,50	0,15-0,45	0,25-0,75	0,25-1,05	0,45-1,35	100 (60-200)	-	220 (150-300)
K7	LNEG1003-EB45	0,20-0,50	0,15-0,45	0,25-0,75	0,25-1,05	0,45-1,35	100 (60-200)	-	220 (150-300)
H3	LNEG1003-EB45	0,10-0,20	0,1-0,25	0,15-0,40	0,25-0,5	0,30-0,7	20 (10-30)	-	-
H5	LNEG1003-EB45	0,10-0,20	0,1-0,25	0,15-0,40	0,25-0,5	0,30-0,7	20 (10-30)	-	-
H7	LNEG1003-EB45	0,10-0,20	0,1-0,25	0,15-0,40	0,25-0,5	0,30-0,7	20 (10-30)	-	-
H8	LNEG1003-EB45	0,10-0,20	0,1-0,25	0,15-0,40	0,25-0,5	0,30-0,7	20 (10-30)	-	-
H11	LNEG1003-EB45	0,10-0,20	0,1-0,25	0,15-0,40	0,25-0,5	0,30-0,7	20 (10-30)	-	-
H12	LNEG1003-EB45	0,10-0,20	0,1-0,25	0,15-0,40	0,25-0,5	0,30-0,7	20 (10-30)	-	-
H21	LNEG1003-EB45	0,10-0,20	0,1-0,25	0,15-0,40	0,25-0,5	0,30-0,7	20 (10-30)	-	-
H31	LNEG1003-EB45	0,10-0,20	0,1-0,25	0,15-0,40	0,25-0,5	0,30-0,7	20 (10-30)	-	-

Cutting data – LNEG...-EB845

SMG		a_p (Ø)	f				V_c
			z=3	z=5	z=7	z=9	RX2000
P1	LNEG1003-EB845	0,15-0,25	0,15-0,60	0,25-1	0,35-1,4	0,45-1,80	120 (80 - 200)
P2	LNEG1003-EB845	0,15-0,25	0,15-0,60	0,25-1	0,35-1,4	0,45-1,80	120 (80 - 200)
P3	LNEG1003-EB845	0,15-0,25	0,15-0,60	0,25-1	0,35-1,4	0,45-1,80	120 (80 - 200)
P4	LNEG1003-EB845	0,15-0,25	0,15-0,60	0,25-1	0,35-1,4	0,45-1,80	60 (40-120)
P5	LNEG1003-EB845	0,15-0,25	0,15-0,60	0,25-1	0,35-1,4	0,45-1,80	60 (40-120)
P6	LNEG1003-EB845	0,15-0,25	0,15-0,60	0,25-1	0,35-1,4	0,45-1,80	60 (40-120)
P7	LNEG1003-EB845	0,15-0,25	0,15-0,60	0,25-1	0,35-1,4	0,45-1,80	60 (40-120)
P8	LNEG1003-EB845	0,15-0,25	0,15-0,60	0,25-1	0,35-1,4	0,45-1,80	40 (30-70)
P11	LNEG1003-EB845	0,15-0,25	0,15-0,60	0,25-1	0,35-1,4	0,45-1,80	40 (30-70)
M1	LNEG1003-EB845	0,10-0,20	0,15-0,45	0,25-0,75	0,25-1,05	0,45-1,35	35 (25-60)
M2	LNEG1003-EB845	0,10-0,20	0,15-0,45	0,25-0,75	0,25-1,05	0,45-1,35	35 (25-60)
M3	LNEG1003-EB845	0,10-0,20	0,15-0,45	0,25-0,75	0,25-1,05	0,45-1,35	35 (25-60)
M4	LNEG1003-EB845	0,10-0,20	0,15-0,45	0,25-0,75	0,25-1,05	0,45-1,35	25 (20-50)
M5	LNEG1003-EB845	0,10-0,20	0,15-0,45	0,25-0,75	0,25-1,05	0,45-1,35	25 (20-50)
K1	LNEG1003-EB845	0,20-0,50	0,15-0,60	0,25-1	0,35-1,4	0,45-1,80	100 (60-200)
K2	LNEG1003-EB845	0,20-0,50	0,15-0,60	0,25-1	0,35-1,4	0,45-1,80	50 (35-80)
K3	LNEG1003-EB845	0,20-0,50	0,15-0,60	0,25-1	0,35-1,4	0,45-1,80	100 (60-200)
K4	LNEG1003-EB845	0,20-0,50	0,15-0,60	0,25-1	0,35-1,4	0,45-1,80	70 (50-120)
K5	LNEG1003-EB845	0,20-0,50	0,15-0,60	0,25-1	0,35-1,4	0,45-1,80	70 (50-120)
K6	LNEG1003-EB845	0,20-0,50	0,15-0,60	0,25-1	0,35-1,4	0,45-1,80	100 (60-200)
K7	LNEG1003-EB845	0,20-0,50	0,15-0,60	0,25-1	0,35-1,4	0,45-1,80	100 (60-200)

SMG = Seco material group
a_p = mm
f = mm/rev
v_c= m/min
All cutting data are start values

Cutting data – LNEG...-EB1570

SMG		a_p (Ø)	f				V_c
			z=3	z=5	z=7	z=9	RX2000
P4	LNEG1003-EB1570	0,15-0,25	0,15-0,45	0,25-0,75	0,25-1,05	0,45-1,35	60 (40-120)
P5	LNEG1003-EB1570	0,15-0,25	0,15-0,45	0,25-0,75	0,25-1,05	0,45-1,35	60 (40-120)
P6	LNEG1003-EB1570	0,15-0,25	0,15-0,45	0,25-0,75	0,25-1,05	0,45-1,35	60 (40-120)
P7	LNEG1003-EB1570	0,15-0,25	0,15-0,45	0,25-0,75	0,25-1,05	0,45-1,35	60 (40-120)
P8	LNEG1003-EB1570	0,15-0,25	0,15-0,45	0,25-0,75	0,25-1,05	0,45-1,35	40 (30-70)
P11	LNEG1003-EB1570	0,15-0,25	0,15-0,45	0,25-0,75	0,25-1,05	0,45-1,35	40 (30-70)
K1	LNEG1003-EB1570	0,20-0,50	0,15-0,45	0,25-0,75	0,25-1,05	0,45-1,35	100 (60-200)
K2	LNEG1003-EB1570	0,20-0,50	0,15-0,45	0,25-0,75	0,25-1,05	0,45-1,35	50 (35-80)
K3	LNEG1003-EB1570	0,20-0,50	0,15-0,45	0,25-0,75	0,25-1,05	0,45-1,35	100 (60-200)
K4	LNEG1003-EB1570	0,20-0,50	0,15-0,45	0,25-0,75	0,25-1,05	0,45-1,35	70 (50-120)
K5	LNEG1003-EB1570	0,20-0,50	0,15-0,45	0,25-0,75	0,25-1,05	0,45-1,35	70 (50-120)
K6	LNEG1003-EB1570	0,20-0,50	0,15-0,45	0,25-0,75	0,25-1,05	0,45-1,35	100 (60-200)
K7	LNEG1003-EB1570	0,20-0,50	0,15-0,45	0,25-0,75	0,25-1,05	0,45-1,35	100 (60-200)

Cutting data – RNAX...-EB45

SMG		a_p (Ø)	f				V_c	
			z=3	z=5	z=6	z=9	RX2000	T100R
K1	RNAX1003-EB45	0,20-0,50	0,15-0,45	0,25-0,75	0,25-1,05	0,45-1,35	100 (60-200)	220 (150-300)
K2	RNAX1003-EB45	0,20-0,50	0,15-0,45	0,25-0,75	0,25-1,05	0,45-1,35	50 (35-80)	70 (50-120)
K3	RNAX1003-EB45	0,20-0,50	0,15-0,45	0,25-0,75	0,25-1,05	0,45-1,35	100 (60-200)	220 (150-300)
K4	RNAX1003-EB45	0,20-0,50	0,15-0,45	0,25-0,75	0,25-1,05	0,45-1,35	70 (50-120)	150 (110-200)
K5	RNAX1003-EB45	0,20-0,50	0,15-0,45	0,25-0,75	0,25-1,05	0,45-1,35	70 (50-120)	150 (110-200)
K6	RNAX1003-EB45	0,20-0,50	0,15-0,45	0,25-0,75	0,25-1,05	0,45-1,35	100 (60-200)	220 (150-300)
K7	RNAX1003-EB45	0,20-0,50	0,15-0,45	0,25-0,75	0,25-1,05	0,45-1,35	100 (60-200)	220 (150-300)

Cutting data – RNAX...-EB845

SMG		a_p (Ø)	f				V_c	
			z=3	z=5	z=6	z=9	RX2000	RX1500
K1	RNAX1003-EB845	0,20-0,50	0,15-0,60	0,25-1	0,35-1,4	0,45-1,80	100 (60-200)	220 (150-300)
K2	RNAX1003-EB845	0,20-0,50	0,15-0,60	0,25-1	0,35-1,4	0,45-1,80	50 (35-80)	70 (50-120)
K3	RNAX1003-EB845	0,20-0,50	0,15-0,60	0,25-1	0,35-1,4	0,45-1,80	100 (60-200)	220 (150-300)
K4	RNAX1003-EB845	0,20-0,50	0,15-0,60	0,25-1	0,35-1,4	0,45-1,80	70 (50-120)	150 (110-200)
K5	RNAX1003-EB845	0,20-0,50	0,15-0,60	0,25-1	0,35-1,4	0,45-1,80	70 (50-120)	150 (110-200)
K6	RNAX1003-EB845	0,20-0,50	0,15-0,60	0,25-1	0,35-1,4	0,45-1,80	100 (60-200)	220 (150-300)
K7	RNAX1003-EB845	0,20-0,50	0,15-0,60	0,25-1	0,35-1,4	0,45-1,80	100 (60-200)	220 (150-300)

Cutting data – RNAX...-EB1570

SMG		a_p (Ø)	f				V_c	
			z=3	z=5	z=6	z=9	RX2000	RX1500
K1	RNAX1003-EB1570	0,20-0,50	0,15-0,45	0,25-0,75	0,25-1,05	0,45-1,35	100 (60-200)	220 (150-300)
K2	RNAX1003-EB1570	0,20-0,50	0,15-0,45	0,25-0,75	0,25-1,05	0,45-1,35	50 (35-80)	70 (50-120)
K3	RNAX1003-EB1570	0,20-0,50	0,15-0,45	0,25-0,75	0,25-1,05	0,45-1,35	100 (60-200)	220 (150-300)
K4	RNAX1003-EB1570	0,20-0,50	0,15-0,45	0,25-0,75	0,25-1,05	0,45-1,35	70 (50-120)	150 (110-200)
K5	RNAX1003-EB1570	0,20-0,50	0,15-0,45	0,25-0,75	0,25-1,05	0,45-1,35	70 (50-120)	150 (110-200)
K6	RNAX1003-EB1570	0,20-0,50	0,15-0,45	0,25-0,75	0,25-1,05	0,45-1,35	100 (60-200)	220 (150-300)
K7	RNAX1003-EB1570	0,20-0,50	0,15-0,45	0,25-0,75	0,25-1,05	0,45-1,35	100 (60-200)	220 (150-300)

SMG = Seco material group
a_p = mm
f = mm/rev
v_c= m/min
All cutting data are start values

Adjusting instructions

1



- Loosen cartridge clamping screw
- Index or replace insert
- Unclamp adjusting screw by 1/4 of a turn and push cartridge back
-Gently re-clamp cartridge clamping screw (0,5 Nm approx)



2

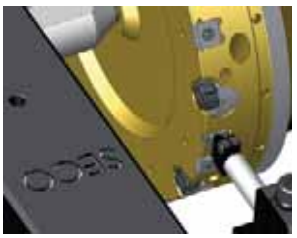

- Set clock to “zero” on reference pad.
- Make sure measuring point is positioned after the lead angle.

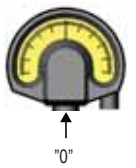

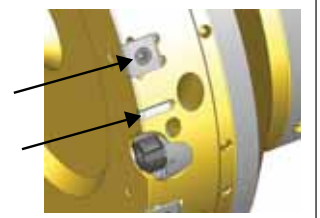

3



-Set insert 0,025 mm above reference pad using adjusting screw
- Repeat adjusting process for all inserts



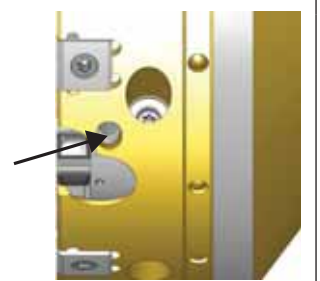

4

- Final clamp cartridge clamping screw (2 Nm).



Note: If the required diameter is exceeded during adjustment, start again from the beginning to eliminate backlash on adjustment screws.

Adjusting instructions, adapter

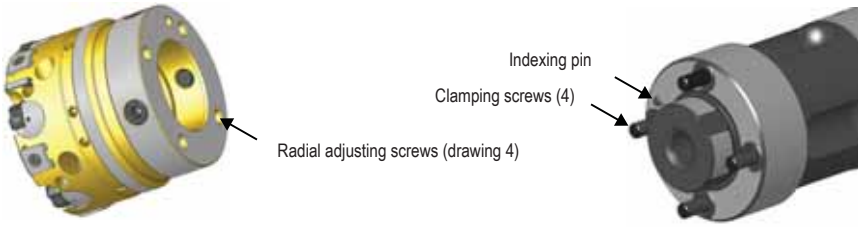

1. Assembly
- Thoroughly clean flange contact surface.
- Loosen 4 radial adjusting screws so they do not interfere for assembly.
- Put reaming head onto adapter (indexing pin) and tighten the 4 clamping screws.

1. Setting operation in the machine spindle

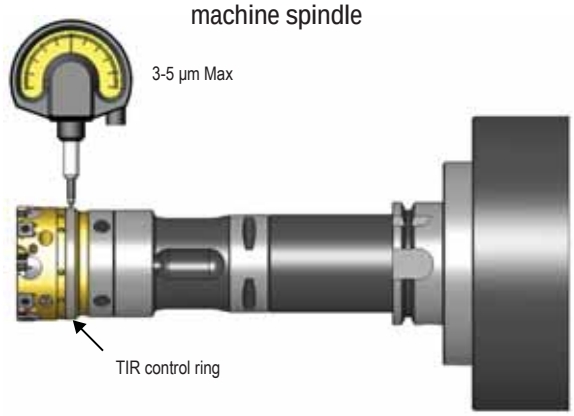

2. Clamping screws



3. Clamping torque table



2. Setting
- Mount tool in the machine spindle.
- Place µm clock as shown in (drawing 2).
- Unlock spindle so it can rotate freely by hand.
- Start run-out correction using 4 adjusting screws (drawing 3).
- Max run-out 5 µm.
- When run-out values get lower than 10 µm, proceed to final clamping (drawing 1) see clamping torque table for torque recommended values.
- Finalize run-out adjustment (Max 5 µm).

Clamping torque table

Diameters	Adapter size	Clamping screw	Clamping torque Nm
39,5-59,499	HF32	CHC M3 x 16	2,7
59,5-84,499	HF55	CHC M5 x 25	5,7
84,5-119,499	HF80	CHC M6 x 25	9,8
119,5-154,499	HF100	CHC M8 x 30	24

Setting fixture – Single clock fixtures



SF-210340-C160: Part No. 02885391

- Horizontal stand
- First choice for Xfix reamers
- 1 clock
- Maximum tool Ø: 210 mm
- Maximum tool length: 340 mm
- Additional Ø 57 mm spring centre for HSK 63/80/100 and Capto C8

Centre point SSC5700 included in delivery

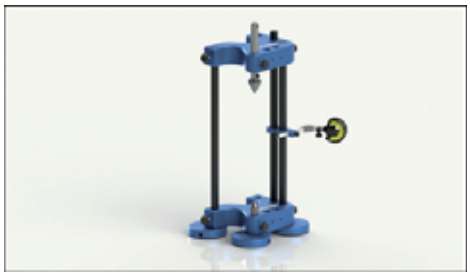

SF-210290V-C160: Part No. 02885392

- Vertical stand
- First choice for Xfix reamers
- Maximum tool Ø: 210 mm
- Maximum tool length: 290 mm
- Additional Ø 57 mm spring centre for HSK 63/80/100 and Capto C8

Centre point SSC5700 included in delivery

Possibilities for multi-clock set up refer to setting fixture chapter page 477-479 for more details

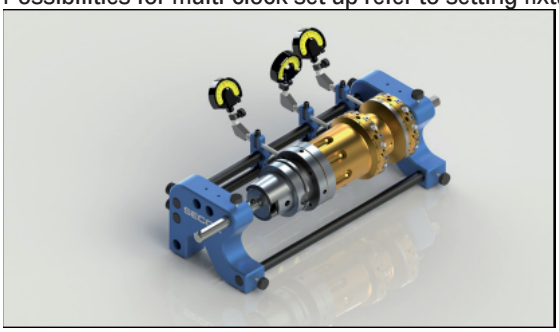

Tooling overview



Diameter	Max dia/length ratio
39,5-59,499	6,5 x D
59,5-84,499	4,5 x D
84,5-119,499	3,3 x D
119,5-154,499	2,5 x D

Note: For diameters > 100 mm or L > 3 x D check max tool weight acceptable in the machine.

Holders for reamers – Overview

Rotating applications

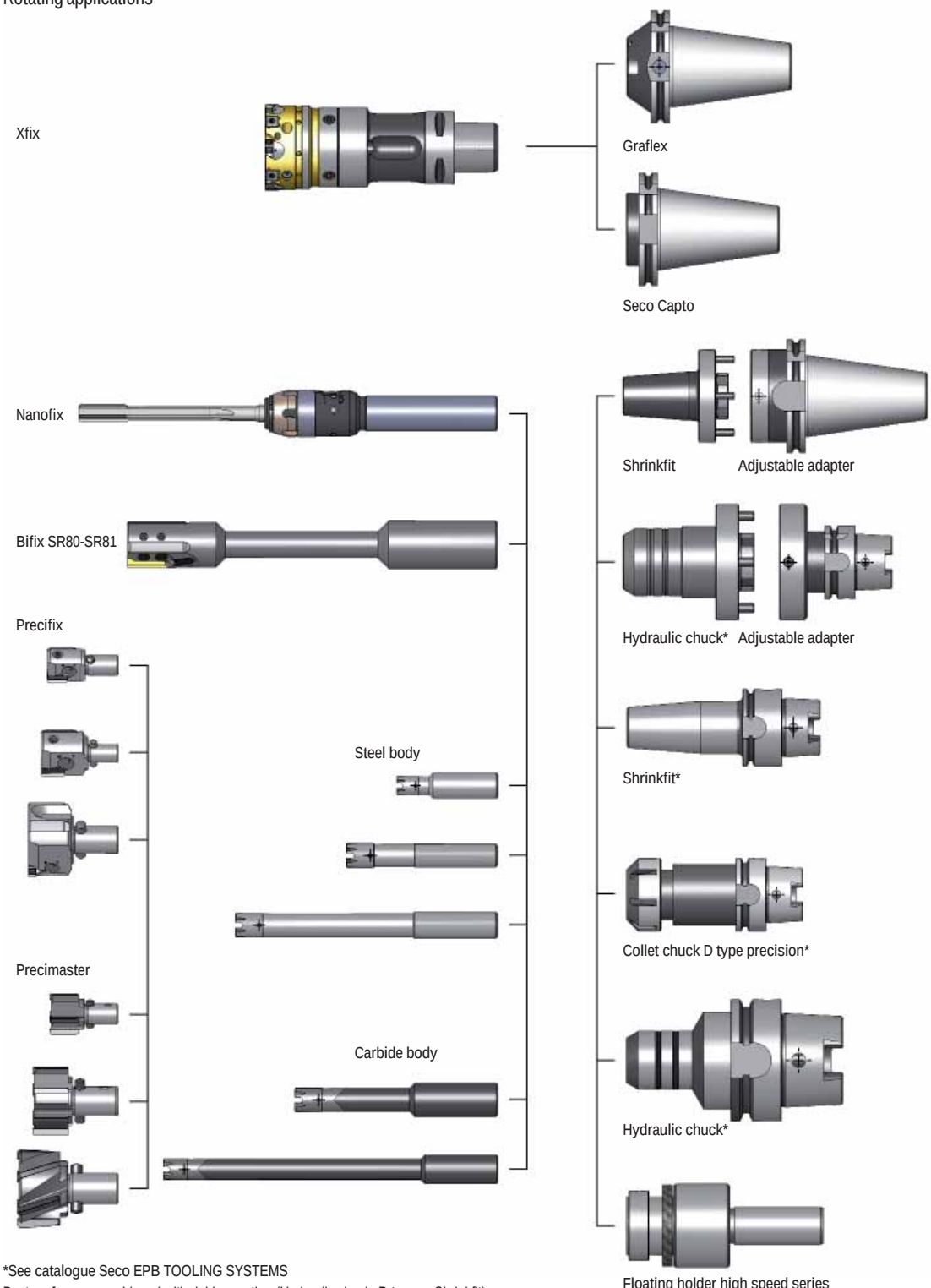

*See catalogue Seco EPB TOOLING SYSTEMS

Best performance achieved with rigid mounting (Hydraulic chuck, D type or Shrinkfit).

Static applications

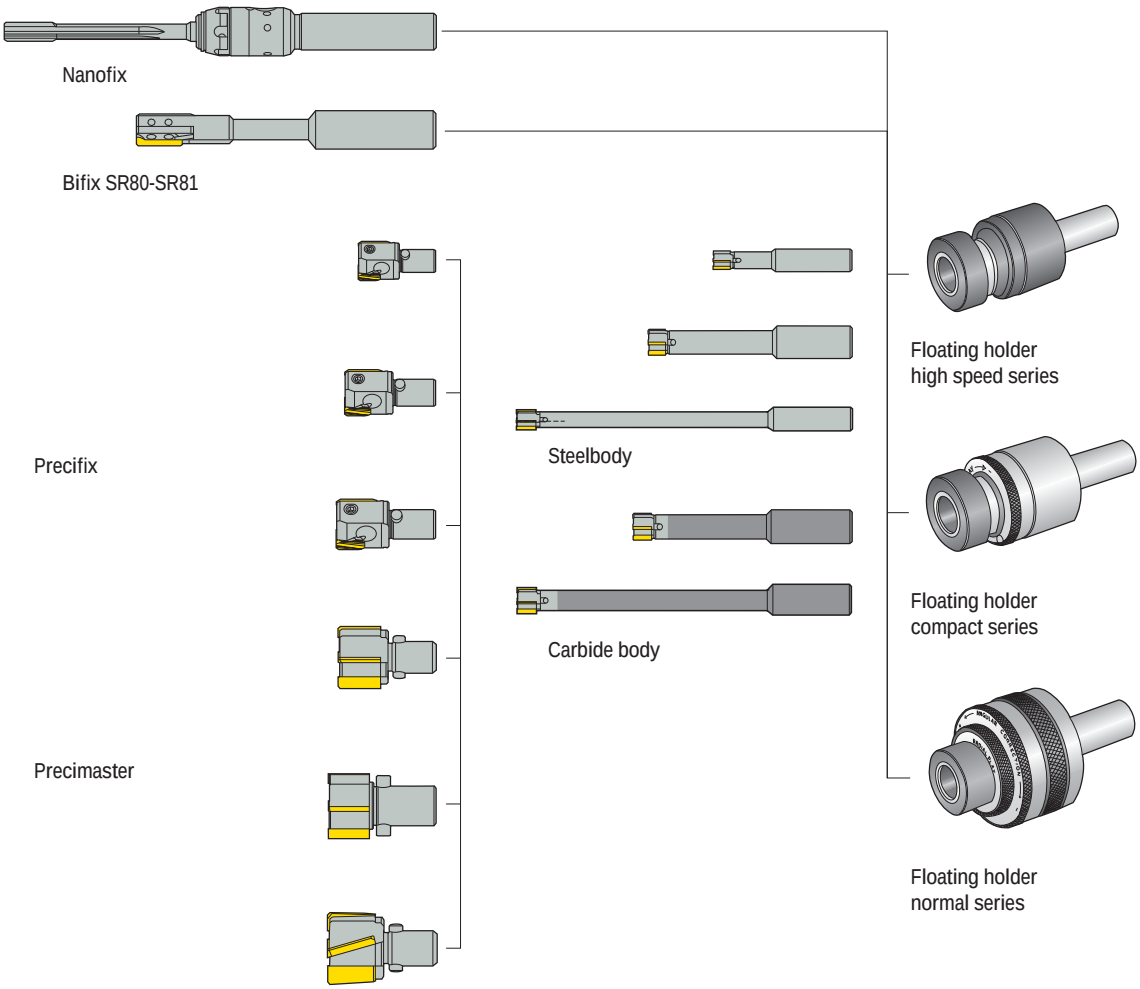

Flange dimension



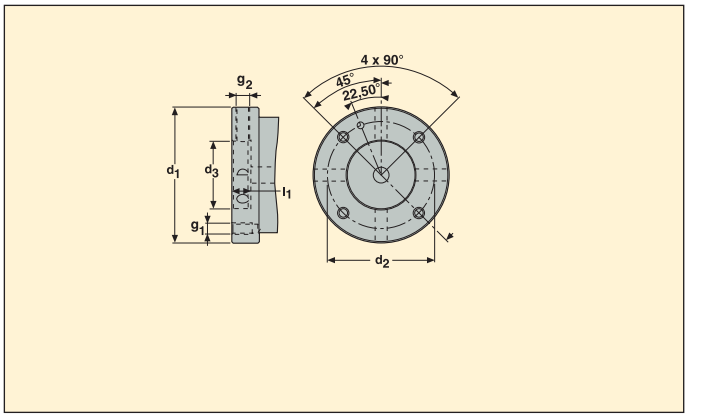

d_1	d_2 +/- 0,1	d_3 F8	l_1	g_1	g_2
60	44	30	12	M5	M8x1
70	53	35	12	M6	M8x1
80	63	40	12	M6	M8x1
100	79	50	14	M8	M10x1
117	96	60	14	M8	M10x1
140	119	80	14	M10	M10x1

Back end HSK-A



- Note: Coolant tube and screws included in delivery

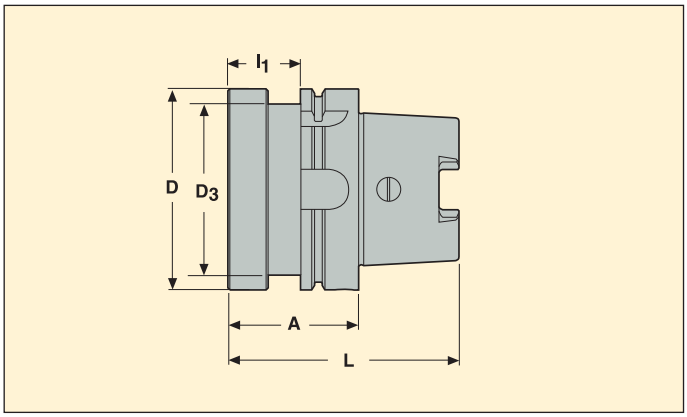

Taper	Part No.	Dimensions in mm					KG
		D	A	L	L_1	D_3	
HSK-A-40	SAH-2340540001	60	55	75	35	34	0,8
HSK-A-50	SAH-2340550001	60	60	85	34	42	0,95
	SAH-2340550003	70	60	85	34	42	1,0
	SAH-2340550002	80	60	85	34	42	1,2
HSK-A-63	SAH-2340563001	60	60	92	34	53	1,2
	SAH-2340563003	70	60	92	34	53	1,3
	SAH-2340563002	80	60	92	34	53	1,4
	SAH-2340563004	100	65	97	39	53	1,95
HSK-A-80	SAH-2340580001	60	50	90	24	67	1,4
	SAH-2340580003	70	60	100	34	67	1,5
	SAH-2340580002	80	60	100	34	67	1,6
	SAH-2340580004	100	65	105	39	67	2,2
HSK-A-100	SAH-23405100001	60	55	105	26	85	2,5
	SAH-23405100007	70	55	105	26	85	2,8
	SAH-23405100002	80	55	105	26	85	2,9
	SAH-23405100003	100	65	115	36	85	3,5

Back end DIN 69871



- Note: Screws included in delivery

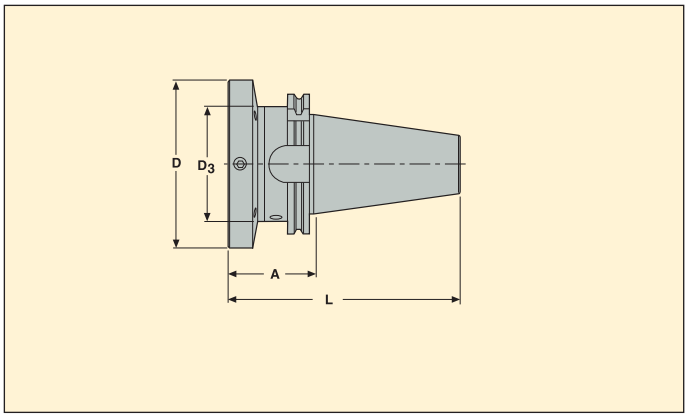

Taper	Part No.	Dimensions in mm				KG
		D	A	L	D_3	
DIN40 ADB	SAH-2340640201	60	50	118,4	50	1,1
	SAH-2340640204	70	50	118,4	50	1,2
	SAH-2340640202	80	55	123,4	50	1,5
	SAH-2340640203	100	60	128,4	50	2,3
DIN50 ADB	SAH-2340650201	60	50	151,8	63	3,1
	SAH-2340650206	70	50	151,8	63	3,3
	SAH-2340650202	80	50	151,8	63	3,6
	SAH-2340650203	100	60	161,8	63	4,3

Back end CAT



- Note: Screws included in delivery

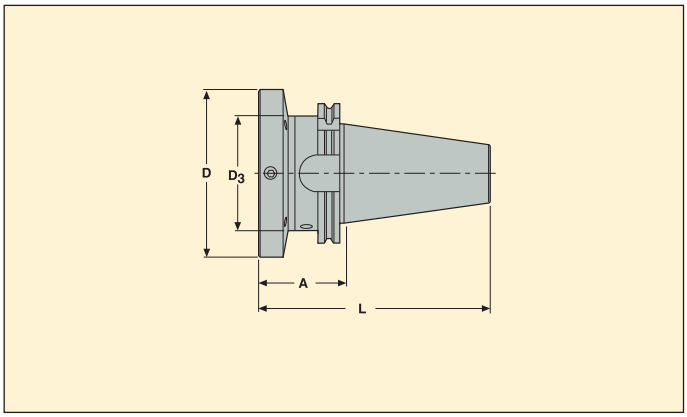

Taper	Part No.	Dimensions in mm				KG
		D	A	L	D_3	
CAT40	SAH-2784940201	60	50	118,4	44,45	1,1
	SAH-2784940204	70	50	118,4	44,45	1,2
	SAH-2784940202	80	55	123,4	44,45	1,5
	SAH-2784940203	100	60	128,4	44,45	2,3
CAT50	SAH-2784950201	60	50	151,8	69,85	3,1
	SAH-2784950206	70	50	151,8	69,85	3,3
	SAH-2784950202	80	50	151,8	69,85	3,6
	SAH-2784950203	100	60	161,8	69,85	4,3

Back end BT



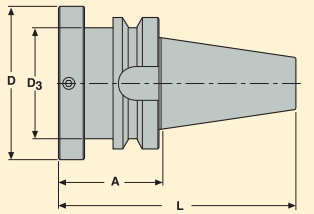

- Note: Screws included in delivery

Taper	Part No.	Dimensions in mm				KG
		D	A	L	D_3	
BT40 ADB	SAH-2340740001	60	55	120,4	50	1,4
	SAH-2340740004	70	55	120,4	50	1,5
	SAH-2340740002	80	65	130,4	50	1,9
	SAH-2340740003	100	60	135,4	50	2,7
BT50 ADB	SAH-2340750001	60	70	171,8	63	4,2
	SAH-2340750002	70	70	171,8	63	4,4
	SAH-2340750003	80	70	171,8	63	4,6
	SAH-2340750004	100	70	171,8	63	4,9

Front end Shrinkfit



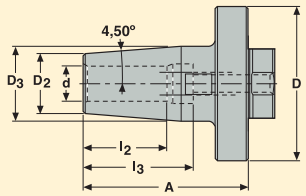

- Note: Adjusting screws included in delivery

d	Part No.	Dimensions in mm						KG
		D	A	l_2	l_3	D_2	D_3	
6	SAH-2341006235	60	70	22	37,5	21	27	0,5
10	SAH-2341010237	60	70	31	42,5	24	32	0,5
12	SAH-2341012238	60	70	34	47,5	24	32	0,52
16	SAH-2341016241	70	75	39	50,5	27	34	0,7
20	SAH-2341020251	80	80	41	52,5	33	42	1,0
25	SAH-2341025260	100	80	47	58,5	44	53	2,2
32	SAH-2341032261	100	80	51	62,5	44	53	2,5

Front end hydraulic chuck



- Note: Adjusting screws included in delivery

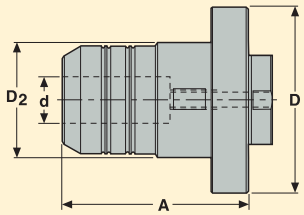

d	Part No.	Dimensions in mm			KG
		D	A	D_2	
16	SAH-2341116253	70	50	38	0,75
12	SAH-2341112255	80	77,5	32	1,1
16	SAH-2341116256	80	82,5	38	1,2
20	SAH-2341120257	80	82,5	42	1,3
25	SAH-2341125258	80	90	50	1,7
12	SAH-2341112259	100	90	32	1,9
25	SAH-2341125260	100	100	50	2,8
32	SAH-2341132261	100	103	60	2,9

Front end ER collet chuck



- Note: Adjusting screws included in delivery

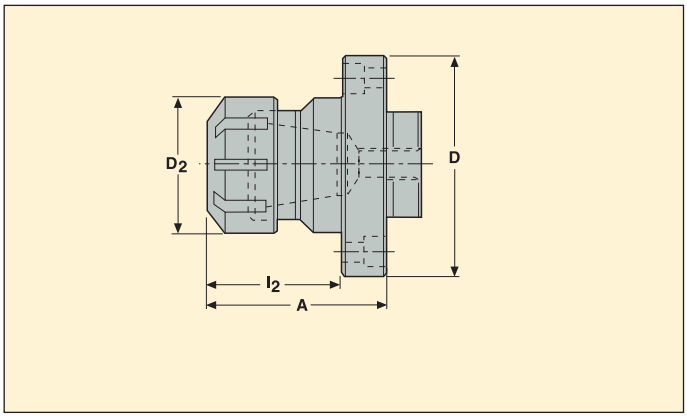

d-d_1	Part No.	Size	Dimensions in mm				KG
			D	A	D_2	l_2	
1-16	SAH-23412ER25254	ER25	80	60	42	45	1,0
2-20	SAH-23412ER32255	ER32	80	60	50	45	1,2
3-26	SAH-23412ER40256	ER40	100	70	63	50	1,6

Assembly instructions

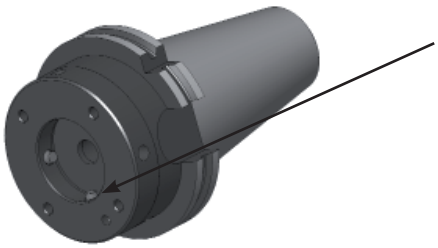

- Clean contact surface
- Make sure radial adjusting screws are not interfering with the assembly

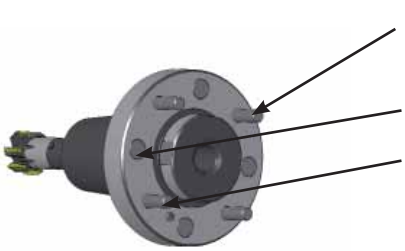

- Make sure angular adjusting screws are not interfering with the assembly



- Proceed to assembly and gently pre-clamp clamping screws (x4)

Adjusting instructions

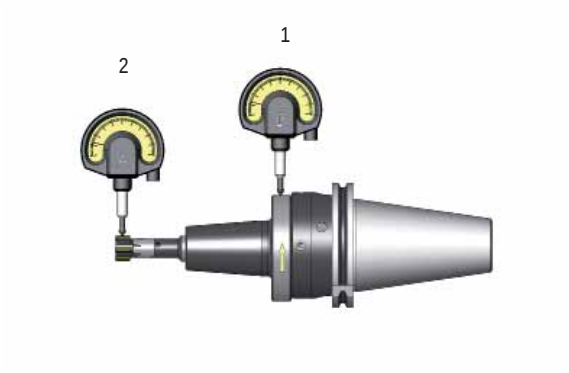

- Mount tool in the machine spindle
- Set up clock 1 as shown (clock 2 not needed at this stage)
- Rotate tool manually until lowest point is reached
- Proceed to radial run-out compensation as shown with arrow
- Check and repeat compensation if necessary

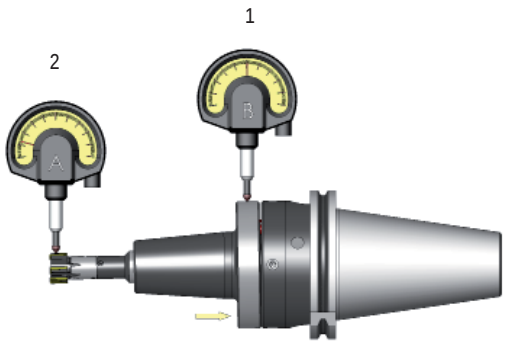

- Set up clock 2 as shown
- Rotate tool manually until lowest point is reached
- Proceed to radial run-out compensation as shown with arrow
- Check and repeat compensation if necessary

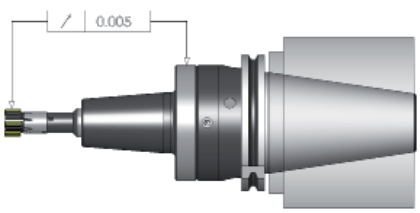

- When finished with adjustment (run-out < 5 μm) finalize clamping to secure assembly

Note:
- Adjustable adapter can be pre-set away from the machine using any tool pre-setting device available in the workshop
- Final adjusting must always be made in the machine spindle
- Micron clock must be used. It is acceptable to use one clock for both operations

Range overview

The use of a Seco floating holder is recommended

- When run-out exceeds 0,02 mm
- For stationary tools



Compact GV high speed series

- First choice for rotating tools
- No adjustment required (factory preset)
- Rotation up to 3000 rpm depending on application
- Suitable for static applications



Compact series

- First choice for stationary tools
- Radial adjustment only
- Suitable for rotating applications – 800 rpm max



Normal series

- When both angular and radial correction is required
- Suitable for rotating applications – 800 rpm max

All floating holders for through coolant
2 types of coolant induction available

JJL: side inlet
JJ: through shank

Users manual included in delivery

Compact GV high speed series



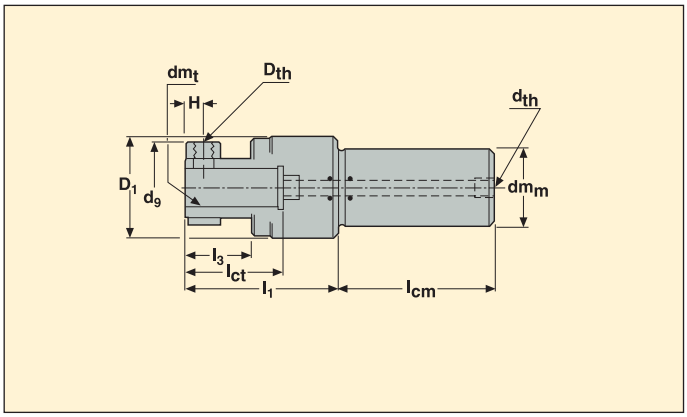

Part No.	Dimensions in mm											
	dm_t mm	dm_m	l_1	l_{cm}	D_1	d_9	l_3	l_{ct}	d_{th}	H	D_{th}	mm
SFH-GV11019JJ	10	19,05	47,5	40	33	30	11,5	25	1/8	5,5	M6	0,2
SFH-GV11020JJ	10	20	47,5	40	33	30	11,5	25	1/8	5,5	M6	0,2
SFH-GV21619JJ	16	19,05	66	50	49,5	39	24,5	40	1/8	8	M8	0,2
SFH-GV21620JJ	16	20	66	50	49,5	39	24,5	40	1/8	8	M8	0,2
SFH-GV22019JJ	20	19,05	76	50	49,5	45	34,5	50	1/8	8	M8	0,2
SFH-GV22020JJ	20	20	76	50	49,5	45	34,5	50	1/8	8	M8	0,2
SFH-GV32525MJJ	25	25	89	60	62	52	43,5	60	1/4	11	M10	0,3
SFH-GV32525JJ	25	25,4	89	60	62	52	43,5	60	1/4	11	M10	0,3
SFH-GV325425JJ	25,4	25,4	89	60	62	52	43,5	60	1/4	11	M10	0,3
SFH-GV43232JJ	32	32	90	80	72	60	34	60	3/8	9	M10	0,3

Accessories

Part No.	Reduction ring	
	d_{mt}	dm_m
SRR-BR11016	10	16
SRR-BR21620	16	20
SRR-BR31625	16	25
SRR-BR32025	20	25
SRR-GV42532	25	32

Compact GV high speed series with collet chuck



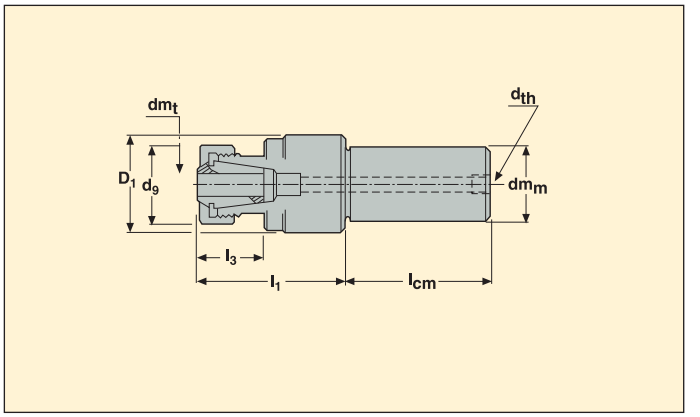

Part No.	Dimensions in mm								
	dm_t	dm_m	l_1	l_{cm}	D_1	d_9	l_3	d_{th}	mm
SFH-GV3BC25MJJ	ER32	25	80	60	62	50	35	1/4	0,3
SFH-GV3BC25JJ	ER32	25,4	80	60	62	50	35	1/4	0,3
SFH-GV4BC31JJ	ER40	31,75	94	80	72	63	39	3/8	0,3
SFH-GV4BC32JJ	ER40	32	94	80	72	63	39	3/8	0,3

Accessories

Part No.	Size	Collet			Size	Spanner
		d_{mt}	D_1	l_2		
5880 3210	ER32	10	33	40	ER32	03B587532
5880 3216	ER32	16	33	40	ER40	03B587540
5880 3220	ER32	20	33	40	-	-
5880 4016	ER40	16	41	46	-	-
5880 4020	ER40	20	41	46	-	-
5880 4025	ER40	25	41	46	-	-
5880 4026	ER40	26	41	46	-	-

Collet and wrenches are not delivered with chucks.

Compact series



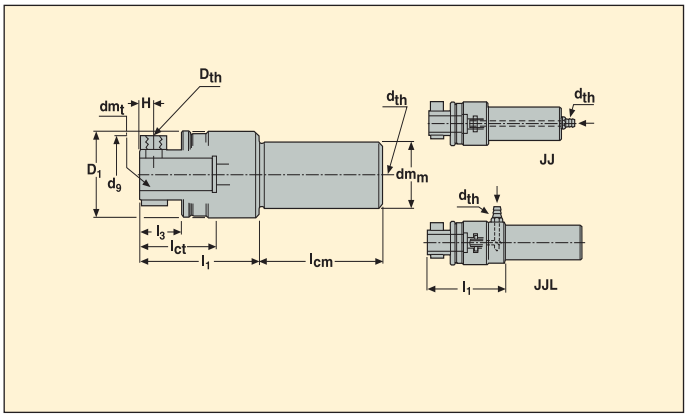

Part No.	Dimensions in mm												
	dm_t mm	dm_m	l_1	l_{cm}	D_1	d_9	l_3	l_{ct}	d_{th}	H	D_{th}	mm	KG
SFH-C01019JJ	10	19,05	44,5	40	38,5	30	11	25	1/8	6	M6	1	0,575
SFH-C01020JJ	10	20	44,5	40	38,5	30	11	25	1/8	6	M6	1	0,59
SFH-C01019JJL	10	19,05	62	60	38,5	30	11	25	1/8	6	M6	1	0,575
SFH-C01020JJL	10	20	62	60	38,5	30	11	25	1/8	6	M6	1	0,59
SFH-C21619CJJ	16	19,05	67,5	50	51,5	34	17	40	1/4	8	M6	1,5	0,97
SFH-C21620CJJ	16	20	67,5	50	51,5	34	17	40	1/4	8	M6	1,5	0,97
SFH-C21619JJL	16	19,05	87	60	51,5	34	17	40	1/4	8	M6	1,5	1,1
SFH-C21620JJL	16	20	87	60	51,5	34	17	40	1/4	8	M6	1,5	1,1
SFH-C22019CJJ	20	19,05	77,5	50	51,5	44	27	50	1/4	8	M8	1,5	0,97
SFH-C22020CJJ	20	20	77,5	50	51,5	44	27	50	1/4	8	M8	1,5	1,0
SFH-C22019JJL	20	19,05	97	70	51,5	44	27	50	1/4	8	M8	1,5	1,1
SFH-C22020JJL	20	20	97	60	51,5	44	27	50	1/4	8	M8	1,5	1,1
SFH-C32525MJJ	25	25	90	110	59,5	50	31	60	3/8	11	M8	1,5	1,7
SFH-C32525JJ	25	25,4	90	110	59,5	50	31	60	3/8	11	M8	1,5	1,7
SFH-C32525MJJL	25	25	125	70	59,5	50	31	60	3/8	11	M8	1,5	1,98
SFH-C32525JJL	25	25,4	125	70	59,5	50	31	60	3/8	11	M8	1,5	1,98

Accessories

Part No.	Reduction ring	
	d_{mt}	dm_m
SRR-BR11016	10	16
SRR-BR21620	16	20
SRR-BR31625	16	25
SRR-BR32025	20	25

Hose adapter is not included in delivery.

Compact series with collet chuck



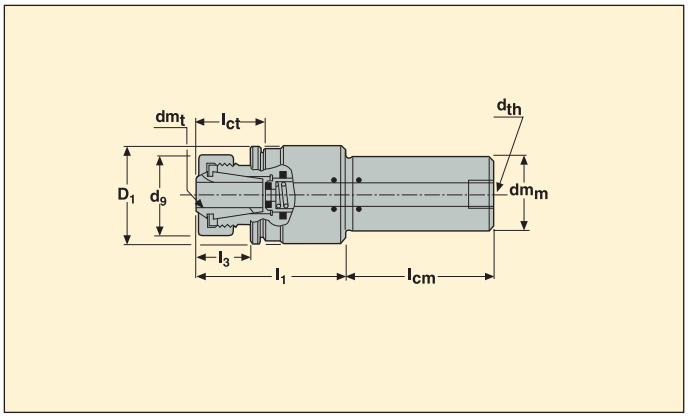

Part No.	Dimensions in mm									
	CZC	dm_m	l_1	l_{cm}	D_1	d_9	l_3	l_{ct}	d_{th}	mm
SFH-C65BC25CJJ	ER32	25,4	94	50	64,5	50	33	42	3/8	1,5
SFH-C65BC25MCJJ	ER32	25	94	50	64,5	50	33	42	3/8	1,5

Accessories

Part No.	Size	Collet			Size	Spanner
		d_{mt}	D_1	l_2		
5880 3210	ER32	10	33	40	ER32	03B587532
5880 3216	ER32	16	33	40	ER40	03B587540
5880 3220	ER32	20	33	40	-	-
5880 4016	ER40	16	41	46	-	-
5880 4020	ER40	20	41	46	-	-
5880 4025	ER40	25	41	46	-	-
5880 4026	ER40	26	41	46	-	-

Collets and wrenches are not delivered with chucks.

Normal series



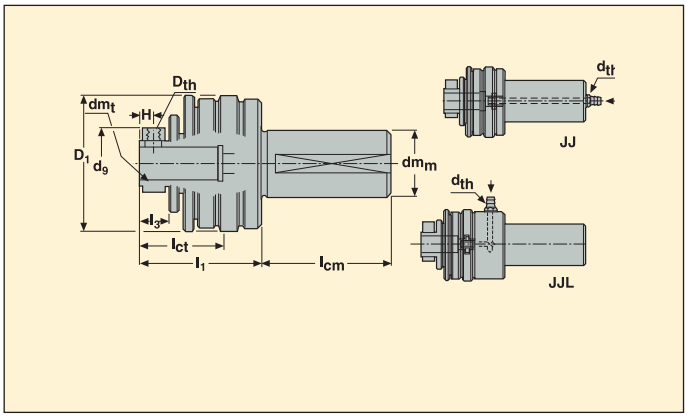

Part No.	Dimensions in mm													
	dm_t mm	dm_m	l_1	l_{cm}	D_1	d_9	l_3	l_{ct}	d_{th}	H	D_{th}		mm	KG
SFH-11619JJ	16	19,05	64	50	62	34	16	40	1/4	8	M6	1	1,5	0,9
SFH-11620JJ	16	20	64	50	62	34	16	40	1/4	8	M6	1	1,5	0,95
SFH-11619JJL	16	19,05	81	40	62	34	16	40	1/4	8	M6	1	1,5	1,32
SFH-11620JJL	16	20	81	40	62	34	16	40	1/4	8	M6	1	1,5	1,34
SFH-22025MJJ	20	25	74	65	82	44	16	50	3/8	8	M8	1	1,5	1,9
SFH-22025JJ	20	25,4	74	65	82	44	16	50	3/8	8	M8	1	1,5	1,9
SFH-22025MJJL	20	25	98	70	82	44	16	50	1/4	8	M8	1	1,5	2,2
SFH-22025JJL	20	25,4	98	70	82	44	16	50	1/4	8	M8	1	1,5	2,2
SFH-32525MJJ	25	25	82,5	110	91	52	22	60	3/8	11	M8	1	2	2,5
SFH-32525JJ	25	25,4	82,5	110	91	52	22	60	3/8	11	M8	1	2	2,5

Accessories

Part No.	Reduction ring	
	d_{mt}	dm_m
SRR-BR11016	10	16
SRR-BR21620	16	20
SRR-BR31625	16	25
SRR-BR32025	20	25

Hose adapter is not included in delivery.

Setting fixture – Single clock fixtures



SF-210340-C160: Part No. 02885391

- Horizontal stand
- First choice for Xfix reamers
- 1 clock
- Maximum tool Ø: 210 mm
- Maximum tool length: 340 mm
- Additional Ø 57 mm spring centre for HSK 63/80/100 and Capto C8

Centre point SSC5700 included in delivery

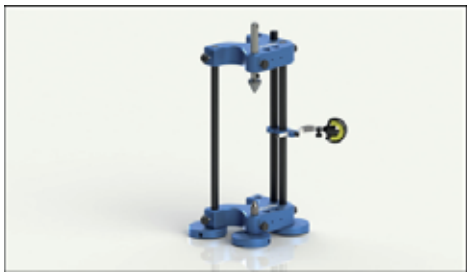

SF-210290V-C160: Part No. 02885392

- Vertical stand
- First choice for Xfix reamers
- Maximum tool Ø: 210 mm
- Maximum tool length: 290 mm
- Additional Ø 57 mm spring centre for HSK 63/80/100 and Capto C8

Centre point SSC5700 included in delivery

Dual clock fixtures

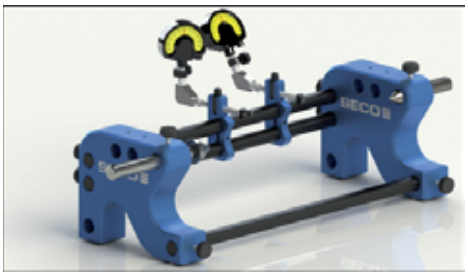

SF-210340-C160C190: Part No. 02885393

- Horizontal stand
- First choice for Bifix reamers
- 2 clocks
- Maximum tool Ø: 210 mm
- Maximum tool length: 340 mm
- Additional Ø 57 mm spring centre for HSK 63/80/100 and Capto C8

Centre point SSC5700 included in delivery

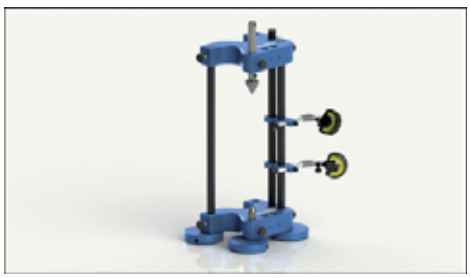

SF-210290V-C160C190: Part No. 02885394

- Vertical stand
- First choice for Bifix reamers
- 2 clocks
- Maximum tool Ø: 210 mm
- Maximum tool length: 290 mm
- Additional Ø 57 mm spring centre for HSK 63/80/100 and Capto C8

Centre point SSC5700 included in delivery

Single clock fixtures large capacity

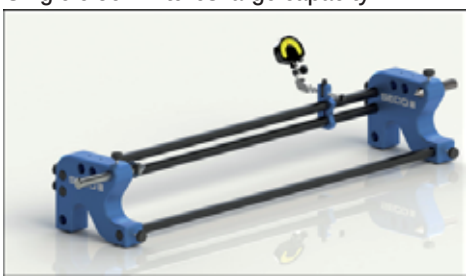

SF-210740-C160: Part No. 02885385

- Horizontal stand
- First choice for long Xfix reamers
- 1 clock
- Maximum tool Ø: 210 mm
- Maximum tool length: 740 mm
- Additional Ø 57 mm spring centre for HSK 63/80/100 and Capto C8

Centre point SSC5700 included in delivery



SF-210690V-C160: Part No. 02885387

- Vertical stand
- First choice for long Xfix reamers
- 1 clock
- Maximum tool Ø: 210 mm
- Maximum tool length: 690 mm
- Additional Ø 57 mm spring centre for HSK 63/80/100 and Capto C8

Centre point SSC5700 included in delivery

Dual clock fixtures large capacity

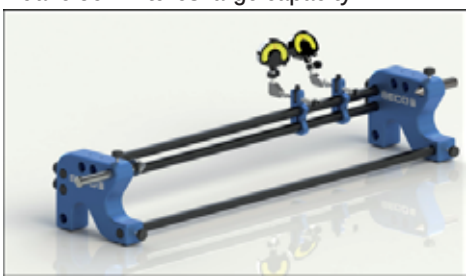

SF-210740-C160C190: Part No. 02885388

- Horizontal stand
- First choice for long Bifix reamers
- 2 clocks
- Maximum tool Ø: 210 mm
- Maximum tool length: 740 mm
- Additional Ø 57 mm spring centre for HSK 63/80/100 and Capto C8

Centre point SSC5700 included in delivery



SF-210690V-C160C190: Part No. 02885390

- Vertical stand
- First choice for long Bifix reamers
- 2 clocks
- Maximum tool Ø: 210 mm
- Maximum tool length: 690 mm
- Additional Ø 57 mm spring centre for HSK 63/80/100 and Capto C8

Centre point SSC5700 included in delivery

Compact setting fixtures



SF-60200-C160: Part No. 02885395

- Horizontal stand
- First choice for Ø smaller than 60 mm
- 1 clock
- Maximum tool Ø: 60,5 mm
- Maximum tool length: 200 mm

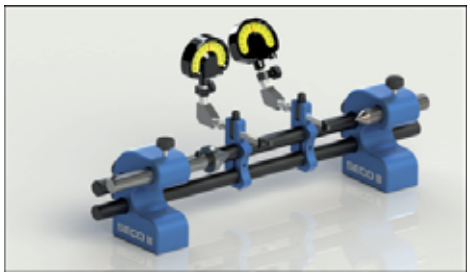

SF-60200-C160C190: Part No. 02885396

- Horizontal stand
- First choice for Ø smaller than 60 mm
- 2 clock
- Maximum tool Ø: 60,5 mm
- Maximum tool length: 200 mm

Additional measuring arms



SFB-60: Part No. 02208619

- Measuring arm 60°
- Dial gauge included in delivery
- Measuring point not included, see page 478



SFB-60 WC: Part No. 02885754

- Measuring arm 60°
- Dial gauge not included in delivery
- Measuring point not included, see page 478



SFB-90: Part No. 02208622

- Measuring arm 90°
- Dial gauge included in delivery
- Measuring point not included, see page 478



SFB-90 WC: Part No. 02885755

- Measuring arm 90°
- Dial gauge not included in delivery
- Measuring point not included, see page 478



DG-1: Part No. 75079759

- Dial gauge , 1 µm

Examples of multi clocks setting fixture assembly

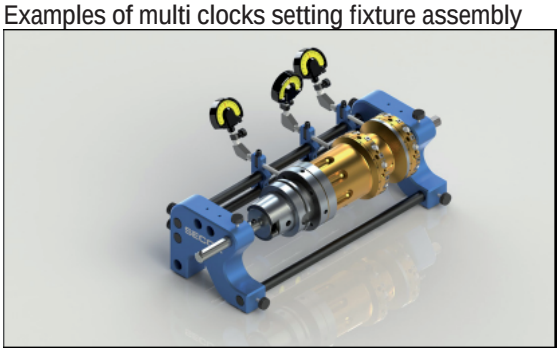

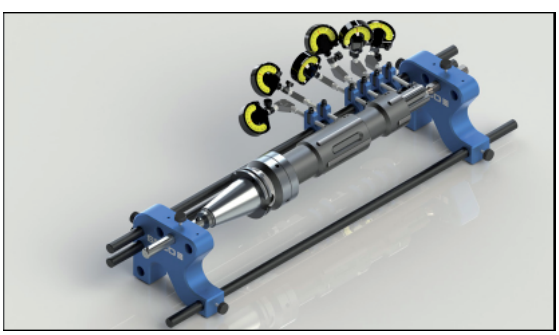

Accessories



SMES-406: Part No. 02819156

- Measuring point for Xfix reamers
- Ø 4mm
- Carbide tipped

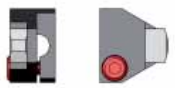

SMES-900: Part No. 02208610

- Measuring point for Bifix & Precifix reamers
- Carbide tipped



SMES-909: Part No. 02208613

- Measuring point for Bifix & Precifix reamers
- Carbide tipped
- 9 mm offset



SMES-915: Part No. 02208616

- Measuring point for Bifix & Precifix reamers
- Carbide tipped
- 15 mm offset



SFHS-20: Part No. 02884025

- Hand-screw
- Suitable for the entire setting fixture range





SFVST- 100: Part No. 02884026

- Steel stand (set of 3)
- Ø 100 mm
- Suitable to convert horizontal setting fixture to vertical position

Centre points

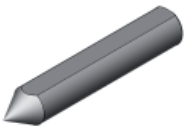

SFC-2000HM: Part No. 02884023

- Solid carbide fixed centre point
- Ø 20 mm
- Suitable for Xfix, Precifix and Bifix range standard and special
- To be used at front end of the tool



SSC-3400: Part No. 02208617

- Spring centre point
- Ø 34 mm
- Suitable for Xfix, Precifix and Bifix range standard and special
- To be used at back end of the tool
- Not suitable for HSK63/80/100 and capto C8



SSC5700: Part No. 02208620

- Spring centre point
- Truncated Ø 57 mm
- Suitable for Xfix, Precifix and Bifix range standard and special
- To be used at back end of the tool
- Suitable for HSK63/80/100 and capto C8



Overview

EPB 750 boring heads, rough boring Twin cutting heads, with insert holders coupling mechanism  Pages 483-496	• High metal removal, precise hole geometry and hole position • Both symmetrical and staggered settings • Simultaneous adjustment by an insert holders coupling mechanism • With Graflex® or Seco-Capto™ connections	∅ range 18 to 205 mm IT 9/10
EPB 610 boring heads, rough boring Twin cutting heads  Pages 497-500	• High metal removal, precise hole geometry and hole position • Both symmetrical and staggered settings • With Graflex® connection	∅ range 39 to 115 mm IT 9/10
EPB 760 boring heads, Axiabore™ type EPB 780 00B kit, axial type Fine boring heads, with axial tools  Pages 501-536	• Micrometric adjustment for hole precision up to IT5 • High tool rigidity for precise hole geometry and position • Nanobore™ head for smaller diameters • Axialibrabore™ and - Axialibrabore™ Plus - are fine balanceable, HSM suitable • Multi-purpose adapter (MPA) for larger boring diameters, OD-overturning and grooving • A780 00B axial fine boring kit, economical solution • With Graflex® or Seco-Capto™ connections	∅ range 0,3 to 108 mm + OD-overturning and face grooving IT 5/6
EPB 780 & EPB 790 boring heads, radial type Fine boring heads, with radial insert holder  Pages 537-548	• Micrometric adjustment for hole precision up to IT5 • Precise hole geometry and position • A790 Libraflex® heads are fine balanceable, HSM suitable Insert holder clamping for highest reliability • Insert holder • Long bores achievable up to 7xD, using “carbide” extensions • Also for chamfering and back-boring • With Graflex® or Seco-Capto™ connections	∅ range 15 to 205 mm IT 5/6

Overview

Bridge bars & Jumbo boring heads For rough and fine boring large diameters  Pages 549-572	• Boring blocks available for rough and fine boring, OD-overturning and back-boring • Strong design for high metal removal in rough boring • Micrometric adjustment for fine boring • Optimized boring block design and Jumbo Bridge bars made from high tensile aluminium for high speeds • To be fitted onto milling cutter holders, flange mounting type	∅ range 204 to 3205 mm IT 5/6 (fine boring) or 9/10 (rough boring)+ OD-overturning IT6
Liteline™ Low weight fine boring heads and modular holders  Pages 573-587	• Made from high tensile aluminium, for over 60% weight reduction • Reduced spindle stress due to lower weight allows higher productivity and precision • Suitable for automatic tool changers with limited weight capabilities • With Graflex® connection	∅ range 64 to 205 mm IT 5/6
Inserts for boring  Pages 589-598	• For boring applications in all materials • High toughness for rough boring • Positive geometries for fine boring • Grades selected for long life	
Graflex® or Seco-Capto™ modular holding system  Pages 599-604	• The boring heads have a Graflex® or a Seco-Capto™ connection shanks enabling a full range of boring depths and diameters • Select the required Graflex® or Seco-Capto™ arbors and extensions from the SECO-EPB TOOLING SYSTEMS catalogue (HSK, DIN, BT, ANSI-CAT, Seco-Capto™) or upper Liteline™ range • Graflex® connections spare parts for boring heads are shown in that chapter	




A750 40
50-65mm

Overview Rough boring heads

Graflex®







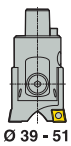

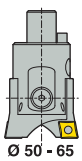

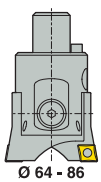

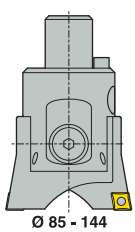

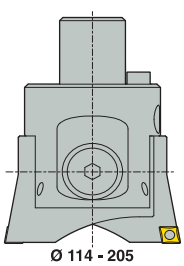

Seco-Capto™

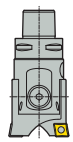

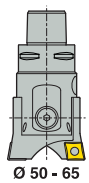

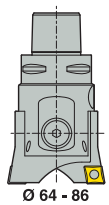

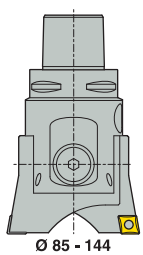

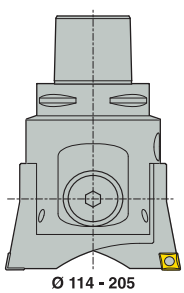

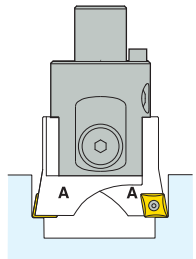

Symmetrical boring:
2 standard type A insert holders

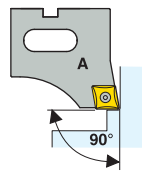

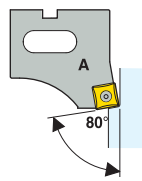

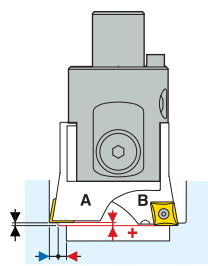

Staggered boring:
1 extended type B and 1 standard type A insert holders

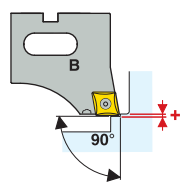

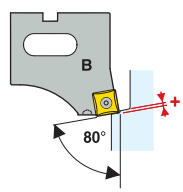

Features

Rough boring heads for bores ∅ 18 to 205 mm

8 rough boring heads EPB 750 with Graflex® connection for bores ∅ 18 to 205 mm

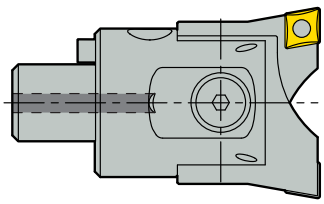

5 rough boring heads EPB 750 with Seco-Capto™ connection for bores ∅ 39 to 205 mm

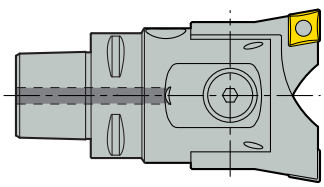

Note: The minimum bore size of the smallest Seco-Capto™ rough boring head is ∅ 39 mm with the smallest available Seco-Capto™ C3 connection.
For ∅ 18 to 40 mm use Graflex® boring heads with connection sizes G0 to G2 in conjunction with the appropriate Seco-Capto™/Graflex® adaptor.
This offers also boring length modularity when using additional Graflex® extensions.

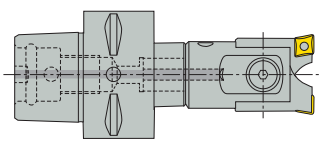

Seco-Capto™ adapter and Graflex® head: ∅ 18 to 40 mm

Note: Features, Instructions (insert holder fitting, diameter setting, back boring instructions, troubleshooting, recommended machining conditions, maximum speeds), suitable insert holders and suitable inserts are similar for both types of EPB 750 rough boring heads of similar boring capacity size, regardless of connection type.

Features

A rough boring head assembly is a combination of 1 body (head) and 2 insert holders.

Simultaneous or independent adjustments of the insert holders are possible:

Simultaneous adjustment by the insert holders coupling mechanism (no coupling mechanism in the smallest head ∅ 18 to 24 mm).
Each adjusting screw moves both insert holders simultaneously (they are gear coupled).
Diameter adjustment is possible without a presetter (1 increment = 0,1 mm on the diameter).
Independent adjustment is also possible: disengage the coupling mechanism so that each adjusting screw acts only on its insert holder.

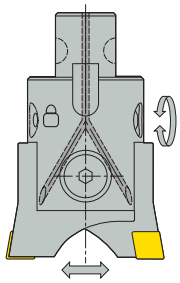

Simultaneous adjustment

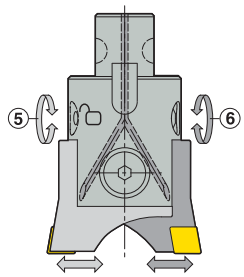

Independant adjustment

Symmetrical boring:
Symmetrical boring means both cutting edges are set on the same diameter: It requires two identical type A standard insert holders (with identical lead angle).

Staggered boring:
Staggered boring means one cutting edge is offset as a leading cutting edge operating on a smaller diameter than the second edge set on the diameter to be realised: It requires one type A standard insert holder and one type B extended insert holder, achieving the required (+) axial offset.

90° or 80° lead angle insert holders

A75…CC… and A75…CP… insert holders have a 90° lead angle for rhombic inserts: mostly suitable for blind holes and requiring less spindle torque.
A75…SC… insert holders have an 80° lead angle for square inserts: mostly suitable for through holes and heavy duty.
Angular orientation of the cutting edges according to ISO.

CC, CP, SC or CN type insert holders

A750...CC..., A750...CP... and A750...SC... insert holders are with 0° rake angle (γo°) and 0° inclination angle (λ_S°).
A750...CN... insert holders are with -6° rake angle (γo°) and -6° inclination angle (λ_S°), allowing use of 'negative' CNMM inserts and particularly multi-edges CNMG inserts with 4 cutting edges. In this case, it is particularly important to select the recommended CN inserts and to respect the recommended cutting data (see page 595). Using other inserts, e.g. with smaller effective cutting angle, and/or incorrect cutting data, could result in high cutting stresses and machine / workpiece damage.

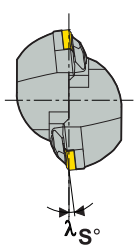

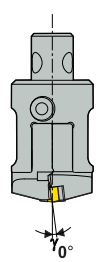

EPB 750 – Rough boring heads

Graflex®



- Symmetrical and staggered boring is possible
- Simultaneous adjustment by insert holders coupling mechanism

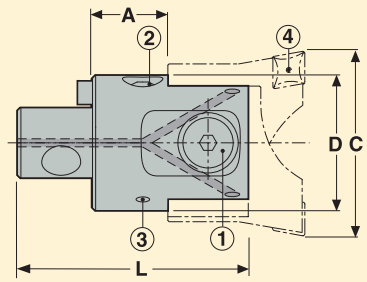

1. Centre screw
2. Adjusting screw
3. Locking screw of coupling mechanism
4. Insert screw

Graflex size	Capacity C ∅ mm	Part No.	Simultaneous adjustment mode		Independent adjustment mode		Dimensions in mm			Max. RPM	* KG
			Yes	No	Yes	No	A	D	L		
G0	18-24	A75000		■	■		12,5	16,5	38	15000	0,03
G1	23-31	A75010	■		■		13,5	21,5	42,5	12000	0,05
G2	30-40	A75020	■		■		16	27	51	9500	0,11
G3	39-51	A75030	■		■		24	35	69	7500	0,27
G4	50-65	A75040	■		■		27	43	78	5700	0,46
G5	64-86	A75050	■		■		30	54	92	4500	0,8
G6	85-144	A75060	■		■		37	70	119	3500	1,69
G7	114-205	A75070	■		■		39	95	143	2500	3,6

Insert holders have to be ordered separately, see pages 489-491.

*Without insert holder

Spare parts**

For head	Centre screw	Clamp key	Setting key	Driving key	Insert key
A75000	90A75000	03HL03	H1.5-2D	-	T07P-3
A75010	90A75010	03HL03	H1.5-2D	T06P-3	T07P-3
A75020	90A75020	03HL04	H2.0-2D	T07P-3	T07P-3
A75030	90A75030	03HL05	H2.0-2D	T08P-3	T15P-3
A75040	90A75040	03HL05	H2.5-2D	T09P-3	T15P-3
A75050	90A75050	03HL06	03M03C	T15P-3	T15P-3
A75060	90A75060	03HL08	H04-4	T15P-3	T15P-3
A75070	90A75070	03HL10	H04-4	T15P-3	T15P-3

Accessories*

Setting gauge
-
CAA75010
CAA75020
CAA75030
CAA75040
CAA75050
CAA75060
CAA75070

Please check availability in current price and stock-list.

* Accessories not included in delivery.

** Centre screw tightening torques, see instructions page 492. Coupling mechanism locking screw tightening torques, see instructions page 494.

Rough boring heads, EPB 750

EPB 750 – Rough boring heads

Seco-Capto™



- Symmetrical and staggered boring is possible
- Simultaneous adjustment by insert holders coupling mechanism

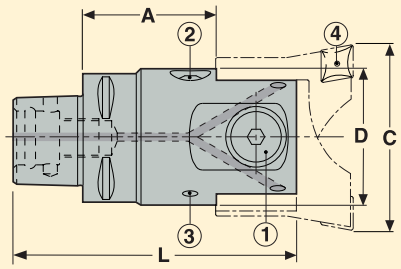

1. Centre screw
2. Adjusting screw
3. Locking screw of coupling mechanism
4. Insert screw

Capto size	Capacity C ∅ mm	Part No.	Simultaneous adjustment mode		Independent adjustment mode		Dimensions in mm			* KG
			Yes	No	Yes	No	A	D	L	
C3	39-51	C3-391.0750-30	■		■		29	35	73,1	0,28
C4	50-65	C4-391.0750-40	■		■		37	43	88	0,52
C5	64-86	C5-391.0750-50	■		■		40	54	102	0,94
C6	85-144	C6-391.0750-60	■		■		49	70	129	1,88
C8	114-205	C8-391.0750-70	■		■		57	95	159	4,14

Insert holders have to be ordered separately, see pages 489-491.

*Without insert holder

Spare parts**

For head	Centre screw	Clamp key	Setting key	Driving key	Insert key
C3-391.0750-30	90A75030	03HL05	H2.0-2D	T08P-3	T15P-3
C4-391.0750-40	90A75040	03HL05	H2.5-2D	T09P-3	T15P-3
C5-391.0750-50	90A75050	03HL06	03M03C	T15P-3	T15P-3
C6-391.0750-60	90A75060	03HL08	H04-4	T15P-3	T15P-3
C8-391.0750-70	90A75070	03HL10	H04-4	T15P-3	T15P-3

Accessories*

Setting gauge
CAA75030
CAA75040
CAA75050
CAA75060
CAA75070

Please check availability in current price and stock-list.

* Accessories not included in delivery.

** Centre screw tightening torques, see instructions page 492. Coupling mechanism locking screw tightening torques, see instructions page 494.

Rough boring insert holders 90°, for CC.. and CP.. inserts, for EPB 750 heads



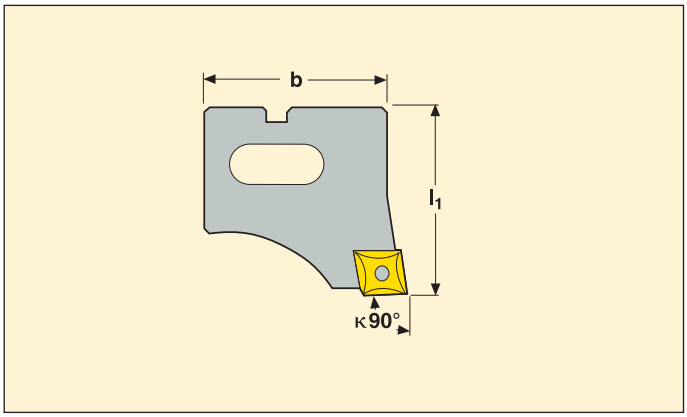

- For fitting onto heads EPB 750
- Symmetrical boring requires two standard type A insert holders
- Staggered boring requires one standard type A and one extended type B insert holders

Insert holders type	For head	Capacity C ∅ mm	Part No.	κ°	Dimensions in mm l_1	Dimensions in mm b	Suitable insert size	KG
Standard type A	EPB 75000	18-24	A75000CP0590	90	22,5	16,5	CP...0502...	0,01
	EPB 75010	23-31	A75010CC0690	90	26,5	21,5	CC...0602...	0,02
	EPB 75020	30-40	A75020CC0690	90	30	27	CC...0602...	0,04
	EPB 75030	39-51	A75030CC0990	90	41	35	CC...09T3...	0,08
	EPB 75040	50-65	A75040CC1290	90	45	43	CC...1204...	0,14
	EPB 75050	64-86	A75050CC1290	90	52	54	CC...1204...	0,25
	EPB 75060	85-115	A75060CC1290	90	68	70	CC...1204...	0,55
	EPB 75060	85-115	A75060CC1690	90	68	70	CC...1605...	0,55
	EPB 75060	114-144	A75065CC1290	90	68	100	CC...1204...	0,89
	EPB 75060	114-144	A75065CC1690	90	68	100	CC...1605...	0,9
	EPB 75070	114-160	A75070CC1290	90	81	95	CC...1204...	1,18
	EPB 75070	114-160	A75070CC1690	90	81	95	CC...1605...	1,18
	EPB 75070	159-205	A75075CC1290	90	81	141	CC...1204...	2,0
	EPB 75070	159-205	A75075CC1690	90	81	141	CC...1605...	2,0
Extended type B	EPB 75000	18-24	A75001CP0590	90	22,8	16,5	CP...0502...	0,01
	EPB 75010	23-31	A75011CC0690	90	26,85	21,5	CC...0602...	0,02
	EPB 75020	30-40	A75021CC0690	90	30,35	27	CC...0602...	0,04
	EPB 75030	39-51	A75031CC0990	90	41,4	35	CC...09T3...	0,08
	EPB 75040	50-65	A75041CC1290	90	45,5	43	CC...1204...	0,13
	EPB 75050	64-86	A75051CC1290	90	52,6	54	CC...1204...	0,25
	EPB 75060	85-115	A75061CC1290	90	68,6	70	CC...1204...	0,55
	EPB 75060	85-115	A75061CC1690	90	68,6	70	CC...1605...	0,55
	EPB 75060	114-144	A75066CC1290	90	68,6	100	CC...1204...	0,91
	EPB 75060	114-144	A75066CC1690	90	68,6	100	CC...1605...	0,91
	EPB 75070	114-160	A75071CC1290	90	81,6	95	CC...1204...	1,16
	EPB 75070	114-160	A75071CC1690	90	81,6	95	CC...1605...	1,16
	EPB 75070	159-205	A75076CC1290	90	81,6	141	CC...1204...	2,0
	EPB 75070	159-205	A75076CC1690	90	81,6	141	CC...1605...	2,01

Please check availability in current price and stock-list.
For insert fixing spare screws and torx keys, see pages 598.
For rough boring recommended inserts, see pages 594.

Rough boring heads, EPB 750

Rough boring insert holders 80°, for SC.. inserts, for EPB 750 heads



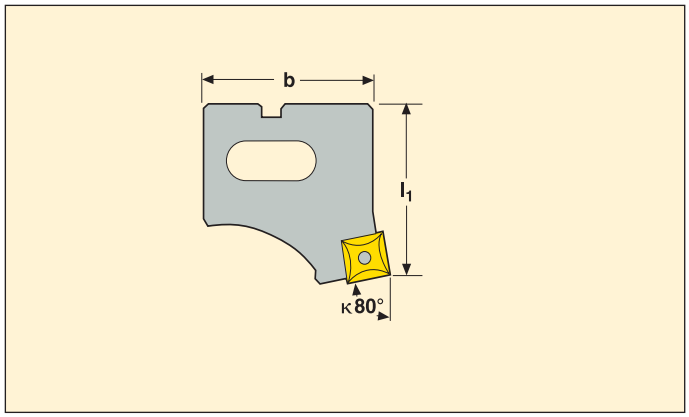

- For fitting onto heads EPB 750
- Symmetrical boring requires two standard type A insert holders
- Staggered boring requires one standard type A and one extended type B insert holders

Insert holders type	For head	Capacity C ∅ mm	Part No.	κ°	Dimensions in mm l_1	Dimensions in mm b	Suitable insert size	KG
Standard type A	EPB 75000	18-24	A75000SC0580	80	22,5	16,5	SC...0502...	0,01
	EPB 75010	23-31	A75010SC0680	80	26,5	21,5	SC...0602...	0,02
	EPB 75020	30-40	A75020SC0680	80	30	27	SC...0602...	0,04
	EPB 75030	39-51	A75030SC0980	80	41	35	SC...09T3...	0,08
	EPB 75040	50-65	A75040SC1280	80	45	43	SC...1204...	0,03
	EPB 75050	64-86	A75050SC1280	80	52	54	SC...1204...	0,25
	EPB 75060	85-115	A75060SC1280	80	68	70	SC...1204...	0,56
	EPB 75060	85-115	A75060SC1580	80	68	70	SC...1505...	0,56
	EPB 75060	114-144	A75065SC1280	80	68	100	SC...1204...	0,94
	EPB 75060	114-144	A75065SC1580	80	68	100	SC...1505...	1,0
	EPB 75070	114-160	A75070SC1280	80	81	95	SC...1204...	1,2
	EPB 75070	114-160	A75070SC1580	80	81	95	SC...1505...	1,18
	EPB 75070	159-205	A75075SC1280	80	81	141	SC...1204...	2,09
	EPB 75070	159-205	A75075SC1580	80	81	141	SC...1505...	2,1
Extended type B	EPB 75000	18-24	A75001SC0580	80	23,2	16,5	SC...0502...	0,01
	EPB 75010	23-31	A75011SC0680	80	27,3	21,5	SC...0602...	0,02
	EPB 75020	30-40	A75021SC0680	80	30,9	27	SC...0602...	0,04
	EPB 75030	39-51	A75031SC0980	80	42,2	35	SC...09T3...	0,08
	EPB 75040	50-65	A75041SC1280	80	46,4	43	SC...1204...	0,14
	EPB 75050	64-86	A75051SC1280	80	53,7	54	SC...1204...	0,26
	EPB 75060	85-115	A75061SC1280	80	69,8	70	SC...1204...	0,57
	EPB 75060	85-115	A75061SC1580	80	70,3	70	SC...1505...	0,57
	EPB 75060	114-144	A75066SC1280	80	69,8	100	SC...1204...	0,96
	EPB 75060	114-144	A75066SC1580	80	70,3	100	SC...1505...	0,96
	EPB 75070	114-160	A75071SC1280	80	82,8	95	SC...1204...	1,21
	EPB 75070	114-160	A75071SC1580	80	83,3	95	SC...1505...	1,21
	EPB 75070	159-205	A75076SC1280	80	82,8	141	SC...1204...	2,16
	EPB 75070	159-205	A75076SC1580	80	83,3	141	SC...1505...	2,14

Please check availability in current price and stock-list.
For insert fixing spare screws and torx keys, see pages 598.
For rough boring recommended inserts, see pages 594.

Rough boring heads, EPB 750

Rough boring insert holders 90°, for CN.. inserts, for EPB 750 heads

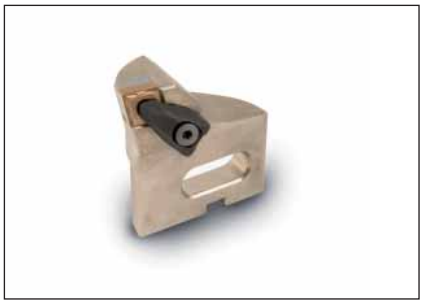

- For fitting onto heads type EPB 750
- Symmetrical boring requires two standard type A insert holders (Type B extended insert holders for CN.. inserts not available)

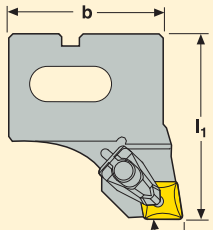

γo° = Rake angle = - 6°
λs° = Inclination angle = - 6°

Insert holders type	For head	Capacity C ∅ mm	Part No.	κ°	Dimensions in mm l_1	Dimensions in mm b	Suitable insert size	KG
Standard type A	EPB 75050	64-86	A75050CN1290	90	63	55	CN...1204...	0,28
	EPB 75060	85-115	A75060CN1290	90	68	69,5	CN...1204...	0,58
	EPB 75060	114-144	A75065CN1290	90	68	99,5	CN...1204...	0,98
	EPB 75070	114-160	A75070CN1290	90	85	95	CN...1204...	1,25
	EPB 75070	159-205	A75075CN1290	90	85	140	CN...1204...	2,03

For rough boring recommended CN.. inserts, see page 595.

Spare parts

For insert holder	Key	Insert shim	Clamp kit	Anvil screw
A75...CN...	T15P-3	UCN120612	CD12-S12	CSC6312-T15P

Please check availability in current price and stock-list.
For rough boring recommended CN inserts, see page 595.

Instructions
Insert holders fitting procedure

Remove central screw (3) and nut (4) (Fig. 1).

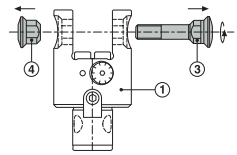

Fig. 1

Simultaneously introduce both insert holders (2) and (2') into the head by locating the grooves onto the adjusting tenons (Fig. 2).

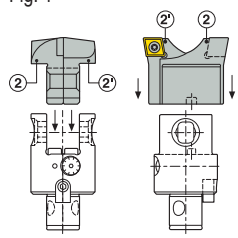

Fig. 2

Insert central screw (3) and nut (4), ensuring that their clamping flats match the head flats (Fig. 3 and Fig. 4).
Lightly tighten screw (3): the insert holders are axially and radially in contact with the head, ready to be adjusted in diameter: see diameter setting instruction on page 493.

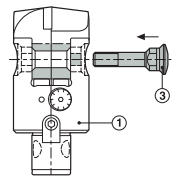

Fig. 3

Remark: always make sure the central screw (3) is unlocked before insert holders diameter adjustment.
Adjust the insert holders to the required diameter, using screw (5) and/or (6) (Fig. 5).
Please refer to symmetrical or staggered methods on pages 493-494.

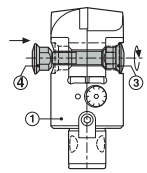

Fig. 4

After diameter setting, tighten the central screw (3) firmly (see recommended torque settings).

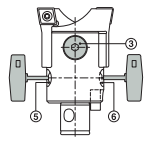

Fig. 5

EPB 750 boring heads - Size	00	10	20	30	40	50	60	70
Central screw (3) tightening torque (Nm)	4,5	8,5	14,5	27,5	30	42	66	96

Instructions
Diameter setting procedure

Diameter setting for symmetrical boring (A+A)

Symmetrical boring requires two identical type A standard insert holders (with identical lead angle) (Fig. 1). Symmetrical positioning of the insert holders is achieved by using the integrated coupling mechanism of the head: simultaneous diameter setting of the insert holders is accessible from both sides of the boring head, using either of two graduated adjusting screws (Fig. 2). Please note there is no coupling mechanism in the smallest head ∅ 18 to 24 mm (A750 00).

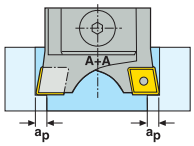

Fig. 1 Symmetrical boring

Remarks: The boring heads are delivered with symmetrical positioning of the adjustment tenons and coupling mechanism clamped, for simultaneous setting.
The feed per rev. equals the recommended feed per tooth, times two (two cutting edges on same diameter). A caliper gauge can be used to measure the diameter adjustment if a presetting device is not available.
The graduated adjusting screws allow additional diameter adjustment directly on the machine tool (1 increment = 0,1 mm on the diameter).
For individual diameter setting of the insert holders, the coupling mechanism can be disabled (see below).

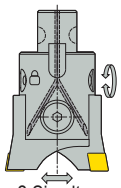

Fig. 2 Simultaneous adjustment

Diameter setting for staggered boring (B+A)

In specific cases, staggered boring is more suitable than symmetrical boring:
- When the symmetrical positioning does not allow the required radial depth of cut.
- Insufficient machine power: changing to staggered boring reduces power consumption.
- Both roughing and finishing operations at the same time: in the case of short through holes, it is possible to combine a rough boring insert and a fine boring insert to perform both operations at the same time.

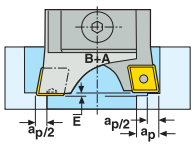

Fig. 3 Staggered boring

The required (E) axial leading offset on the minor diameter is obtained by substitution of one Type A insert holder by an extended Type B (with a distinguishing mark on the front end) of identical lead angle (Fig. 3).

The feed per rev. equals the recommended feed for one tooth.
Maximum feed per rev. when staggered boring (f Max.) is dictated by the type B insert holder and is shown in the table below.

Insert holder size (type B)	01	11	21	31	41	51	61	66	71	76
f Max. (mm/rev)	0,25	0,3	0,4	0,5	0,6	0,6	0,6	0,6	0,6	0,6

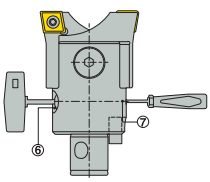

Fig. 4 Disabling the coupling mechanism

In order to individually set the diameters of the insert holders, the coupling mechanism must be disabled, by releasing its locking screw (7) by one turn (using the suitable torx driver - Torxplus) while firmly holding adjusting screw (6) (Fig. 4). Independent setting can then be carried out, adjustment screws (5) and (6) controlling the movement of one related insert holder each (Fig. 5).

The extended insert holder (with a distinguishing mark in the front) must be adjusted to the bore radius minus half the depth of the cut (ap/2). The second insert holder must be adjusted to the bore diameter.

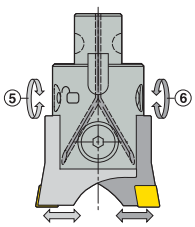

Fig. 5 Independent adjustment

Instructions
Returning from staggered to symmetrical insert holders positioning

To return from staggered to symmetrical positioning by re-engaging the coupling mechanism, two methods are possible:
– use a pre-setter and two identical insert holders with fitted inserts.
– use the setting gauge to re-set the coupling mechanism (without insert holders in place).

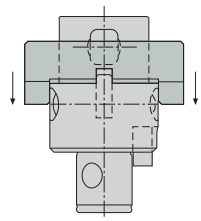

Setting gauges – Type CAA750... are available for each head size with coupling mechanism (dia 23 and above). Shown as Accessories on page 487-488.

After setting, lock the coupling mechanism by tightening the locking screw (7) (using a suitable Torx-plus driver) while firmly holding adjusting screw (6).
See below recommended torques.

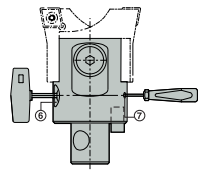

EPB 750 boring head - Size	00	10	20	30	40	50	60	70
Tightening torque (Nm) of coupling system´s locking screw (7)	-	0,4	0,6	1,2	1,5	3	3	3

For further application details refer to the instruction sheet supplied with the boring head.

Instructions
Recommended machining conditions

Spindle power:

As rough boring requires high machine power, we recommend to check that the machine is suitable. Staggered boring is a solution to reduce the power needs, as the feed is divided by two for the same total depth of cut, compared to symmetrical setting.
Optimum performance is obtained with through coolant (higher machining data, better surface finish, better chip evacuation, longer insert life).

Maximum speeds for rough boring heads

Head	Capacity ∅ mm	max. RPM (RPM	Implied max. cutting speed v_c at min. Cap. (m/min)	Implied max. cutting speed v_c at max. Cap. (m/min)
Rough boring heads (with two identical insert holders set symmetrically), with Graflex® connection				
A750 00	18-24	15000	848	1131
A750 10	22-31	12000	867	1169
A750 20	30-40	9500	895	1194
A750 30	39-51	7500	919	1202
A750 40	50-65	5700	895	1164
A750 50	64-86	4500	905	1216
A750 60	85-115	3500	935	1264
	114-144	2700	967	1221
A750 70	114-160	2500	895	1257
	159-205	2000	999	1288
Rough boring heads (with two identical insert holders set symmetrically), with Seco-capto™ connection				
C3-391.0750-30	39-51	7500	919	1201
C4-391.0750-40	50-65	5700	895	1164
C5-391.0750-50	64-86	4500	905	1216
C6-391.0750-60	85-115	3500	935	1264
	114-144	2700	967	1221
C8-391.0750-70	114-160	2500	895	1257
	159-205	2000	999	1288

Note: The maximum speeds are related to the boring head's mechanical design and balancing quality. Speeds inside these limits have to be chosen in regard to the other machining conditions, e.g. workpiece material, cutting edge (insert), tooling length, machine spindle. At speeds from approx. 8000 RPM and above, the basic holders and the extensions/reducers should be fine balanced.

Instructions
Troubleshooting

Position	Possible cause	Solution
Poor chip control	Feed rate too low	Increase feed rate
	Excessive DOC	Use staggered method
Chatter & Vibrations	Excessive speed	Reduce cutting speed, not feed
	Extreme L/D ratio	Shorten tool to increase stiffness
		Increase holding arbor's and intermediate's OD
		Use carbide or heavy metal extensions
	Too large insert radius	Use insert with smaller radius
	Unstable workpiece	Improve fixture and clamping support
	Lead angle κ is 80°	Change to κ=90°, type CC insert
Insert chipping or breaking	Wrong insert	Change to tougher grade of insert
		Use larger radius if available
	Severe interrupted cut	Decrease speed, decrease feed
	Chips packing and re-cutting	Check for boring bar/bore diameter clearance
		Improve chip control, increase feed
Poor tool life	Wrong insert	Change to higher wear resistant grade
	Excessive cutting speed	Reduce speed
	Insert chipping	Check DOC and feed rate
	Too low coolant pressure	Increase coolant pressure
Chips not evacuating	Boring assembly to large	Reduce to a smaller head with extended insert holders when possible
	Excessive DOC	Use staggered method; prefer CC.. instead of CN.. inserts (particularly when using the boring head at its small diameters).
	Inadequate space below bore	Set the workpiece higher onto the table
	Poor chip control	See above
Insufficient machine power	Excessive feed rate	Reduce feed (not less then 25% of insert radius)
	Excessive DOC	Use staggered method
	Low machine power	RPM in area of low spindle torque: increase speed
		RPM in area of gear change: adjust RPM
		Change insert to higher rake angle (to HSS in extreme cases)
		Reduce DOC
Excessive hole exit burr	Excessive feed rate	Reduce feed
	CC type insert holders 90°	Use 80° square insert holder
	Cutting forces too high	Reduce DOC
		Reduce insert radius

Rough boring heads, EPB 610

Overview

4 Compact rough boring heads for ∅ 39 to 115 mm

Compact design

- Short body to maximise the rigidity of the boring assembly
- Reduced weight for faster tool changing and spindle acceleration
- High rigidity resulting from a perfect contact between the insert holder and the head's body, thanks to a uniform pressure applied by large screws' surface contact

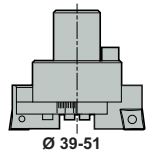

Ø 39-51

Intuitive and fast setting

- Each insert holder features its push and pull setting mechanism allowing easy and fast setting of the diameter
- Intuitive locking and setting systems
- Diameter scales roughly visualise the insert holders positions

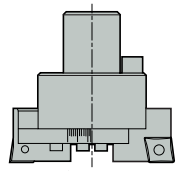

Ø 50-65

Flexible

- 90° insert holders for standard CC inserts
- Graflex® Modular System allowing to build up optimal boring assemblies

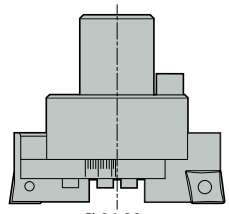

Ø 64-86

Productivity

- Possibility to take a depth of cut a_p up to half of the insert's width, maximising the chip removal rate and allowing a total exploitation of the inserts
- Staggered boring using a shim to offset one insert holder in order to increase the chip removal rate, or to split the radial depth of cut
- Through coolant delivery directed towards the insert

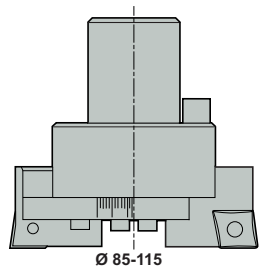

Ø 85-115

Geometrical hole precision

- Achieving geometrical hole precision starting from cast, flame cut or drilled hole
- Minimised unbalance thanks to a symmetrical design

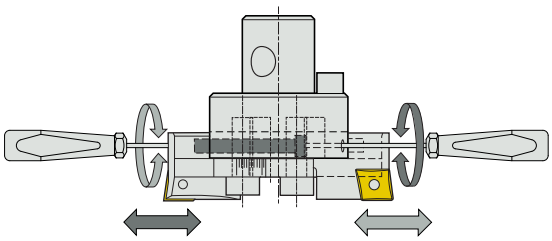

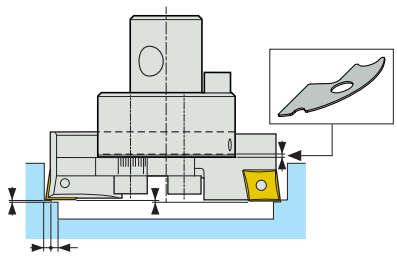

Rough boring heads, EPB 610

Features

4 rough boring heads for bores ∅ 39 to 115 mm

A rough boring head assembly is a combination of 1 body (head) and 2 insert holders.

The diameter setting is made by setting each insert holder to the right position, using either a pre-setter or the scales engraved on each side of the boring head's body.

Symmetrical boring:
Symmetrical boring means both cutting edges are set on the same diameter.

Staggered boring:
Staggered boring means one cutting edge is offset as a leading cutting edge operating on a smaller diameter than the second edge set on the diameter to be realised: It requires a shim (part of the head delivery content) to be set between the boring head's body and the insert holder to achieve the required (+) axial offset.

90° insert holders for CC inserts

A610…CC… insert holders have a 90° lead angle for rhombic inserts, requiring less spindle torque, 0° rake angle and 0° inclination angle.



EPB 610 – Rough boring heads, compact

Graflex®



- Symmetrical and staggered boring are possible
- Individual insert holder adjusting driving mechanism

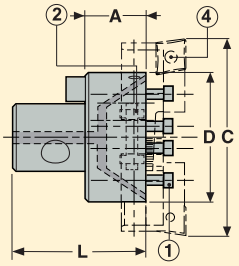

1. Clamp screw
2. Setting screw
4. Insert screw

Graflex size	Capacity C ∅ mm	Part No.	Dimensions in mm A	D	L	* KG
G3	39-51	A61030	23,5	34	43,5	0,18
G4	50-65	A61040	21,5	43	45,5	0,27
G5	64-86	A61050	25,0	54	55,0	0,54
G6	85-115	A61060	29,0	63	69,0	0,93

Insert holders have to be ordered separately, see page 500.

* Without insert holders.

Spare parts

For head	Shim, staggered boring	Key	Clamp screw
A610 30	AU6103003	T15P-3	950D0616
A610 40	AU6104003	T15P-3	950D0616
A610 50	AU6105003	T15P-3	950D0820
A610 60	AU6106003	T15P-3	950D0822

Please check availability in current price and stock-list.

Rough boring heads, EPB 610

Rough boring insert holders 90°, for CC inserts, for EPB 610 heads

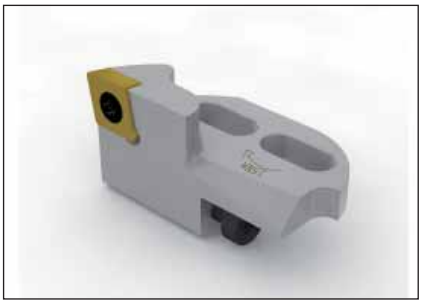

- For fitting onto heads EPB 610
- Symmetrical boring: directly fit two insert holders on the boring head
- Staggered boring: requires an additional shim to achieve the required (+) axial offset

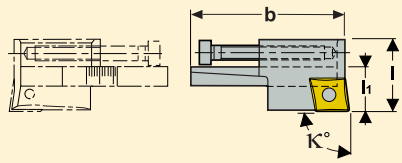

1. Setting screw

For head	Capacity C ∅ mm	Part No.	κ°	Dimensions in mm			Suitable insert size	KG
				l	l_1	b		
A61030								
	39-51	A61030CC0990	90	21,6	12,9	33	CC...09T3...	0,1
A61040								
	50-65	A61040CC0990	90	22,5	13,8	43,8	CC...09T3...	0,1
A61050								
	64-86	A61050CC1290	90	27,5	17,3	57,4	CC...1204...	0,2
A61060								
	85-115	A61060CC1290	90	30,5	18,8	75	CC...1204...	0,3

Spare parts

For insert size	Setting screw	Insert screw	Clamp key
	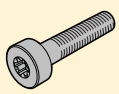		
A61030CC0990	19A61030	C04008-T15P	03HL05
A61040CC0990	19A61040	C04008-T15P	03HL05
A61050CC1290	19A61050	C05012-T15P	03HL06
A61060CC1290	19A61060	C05012-T15P	03HL06

Accessories*

Insert key
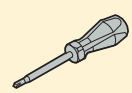
T15P-3
T15P-3
T15P-3
T15P-3

Please check availability in current price and stock-list.
* Accessories not included in delivery.
For rough boring recommended inserts, see pages 594.



Overview







OD-overturning



Grooving



Interrupted cut boring



Boring

Overview

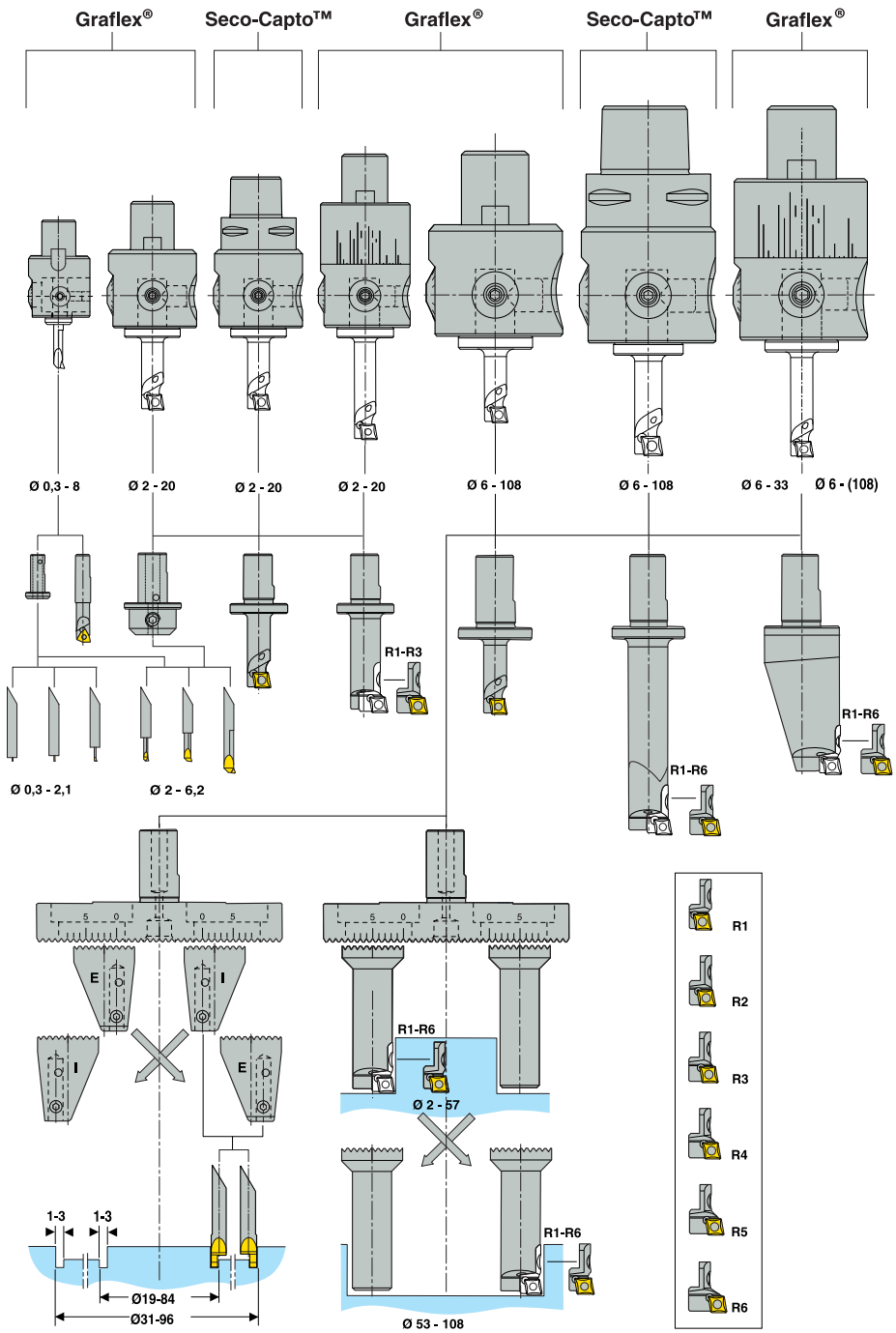
Graflex®
Seco-Capto™
Graflex®
Seco-Capto™
Graflex®
Ø 0,3 - 8
Ø 2 - 20
Ø 2 - 20
Ø 2 - 20
Ø 6 - 108
Ø 6 - 108
Ø 6 - 33
Ø 6 - (108)
R1-R3
R1-R6
R1-R6
Ø 0,3 - 2,1
Ø 2 - 6,2
E
I
I
E
1-3
1-3
Ø19-84
Ø31-96
R1-R6
Ø 2 - 57
R1-R6
Ø 53 - 108
R1
R2
R3
R4
R5
R6

Axiabore™ type fine boring heads for bores ∅ 0,3 to 108 mm

An Axiabore™ type head is an assembly of a body (head) and a tool.

Axiabore™ type head selection

	Capacity	HSM/ Max speeds	Hole geometry	Cost effective	Multipurpose
Nanobore™ A760 01	∅ 0,3-8	30000 RPM	■■	■■	
Axiabore™ A760 02	∅ 2-20	12000 RPM	■	■■	
Axiabore™ C3-931.0760-02	∅ 2-20	12000 RPM	■	■■	
Axialibrabore™ A760 12	∅ 2-20	24000 RPM or 1500 m/min	■■	■	
Axiabore™ Plus - A760 03	∅ 6-108	8000* RPM or 1000 m/min	■	■■■	■■■
Axiabore™ Plus C5-391.0760-03	∅ 6-108	8000* RPM	■	■■■	■■■
Axialibrabore™ Plus - A760 13	∅ 6-33	20000 RPM or 1500 m/min	■■	■	

'Libra' heads are fine balanceable. The other heads are pre-balanced on median position.* Max 5000 RPM when using the multi-purpose adapter.

Axiabore™ type heads exists with Graflex® or Seco-Capto™ connection:

5 Axiabore™ fine boring heads EPB 760 with Graflex® connection for bores ∅ 0,3 to 108 mm:

Nanobore™ A760 01
Axiabore™ A760 02
Axialibrabore™ A760 12
Axiabore™ Plus - A760 03
Axialibrabore™ Plus - A760 13

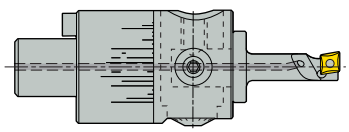

2 Axiabore™ fine boring heads EPB 760 with Seco-Capto™ connection for bores ∅ 2 to 108 mm:

Axiabore™ C3-391.0760-02

Axiabore™ Plus- C5-391.0760-03

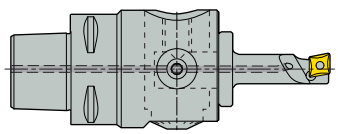

Note: The minimum bore size of the smallest Seco-Capto™ fine boring head is ∅ 2 mm with the smallest available Seco-Capto™ C3 connection. For ∅ 0,3 to 8 mm use Nanobore™ head with connection size G2 in conjunction with the appropriate Seco-Capto™/Graflex® adapter.

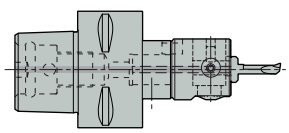

Seco-Capto™ adapter and Graflex® head: ∅ 0,3 to 8 mm

Note: Features, Instructions (tool fitting procedure, diameter setting, MPA assembly procedure, maximum speeds, recommended cutting speeds, troubleshooting), suitable tools and insert holders are similar for both types of EPB 760 fine boring heads of similar boring capacity size, regardless of connection type.

Boring tools

Note: In the Product pages, it is clearly mentioned which tools are suitable for which heads.

Boring tools, solid carbide (shank 4 mm) for the smallest diameters (0,3 to 6,2 mm), lead angle 98°. Require reduction bushes to fit into Nanobore™ and Axia(libra)bore™ heads. The tools have an angled back end for cutting edge orientation according to ISO.

Boring bars, insert type (shanks ∅ 6, 12 or 16 mm) for ∅ 6 to 13 mm, 'steel' type for short tools, 'carbide' type for long tools. For WB..0301.. or CC..0602.. inserts and 90° lead angle.
Direct fitting into the heads. The locking flat achieves a cutting edge orientation according to ISO.

Boring bars, modular composed of a 'shank' and an 'insert holder' for ∅ 13 to 63 mm.
Shanks (∅ 12 or 16 mm) in 'steel' for short, 'carbide' for long and 'Lightweight / aluminium' for the largest diameters. Direct fitting into the heads.

Six insert holders for CC..0602.. inserts and 90° lead angle, compatible with all shanks to build up a wide boring capacity on a common shank.

Multi-purpose adapter (MPA)

MPA for boring and OD-overturning, as well as face grooving on the - Axiabore™ Plus - head.
The MPA and tools have a serrated interface, for precise orientation and positioning increments (2,5 mm on diameter).
Directional through coolant nozzle included.

Select the components to build up an MPA type tool on the MPA tool selection charts. See assembly details in the Instructions chapter.

Set up a Boring or OD-overturning assembly.
Boring and OD-overturning assemblies use the same shank equipped with an insert holder, and a counterweight.
Boring assembly: Select the appropriate insert holder to be assembled onto the boring/OD-overturning shank, using the selection chart 'Boring with MPA' (part of following Product pages).
OD–overturning assembly: Select the appropriate insert holder to be assembled onto the boring/OD-overturning shank, using the selection chart 'OD-overturning with MPA' (part of following Product pages). See assembly details in the Instructions chapter.

Building a grooving assembly
A grooving assembly requires:
• a pair of grooving tool holders (one E='External' and one I='Internal'),
• one grooving tool 'against Spigot' or 'against Bore'.
When the groove is not against a spigot wall nor against a bore wall, both tool types are suitable.
See the selection charts 'Grooving tool for grooving with MPA'.

Features

Nanobore™ head Part No. A76001 	Ultra small head for fine boring ∅ 0,3 – 8 mm: External diameter 25 mm, length 25 mm, with Graflex® connection size G2, tool fitting ∅ 6 mm. Operating speeds up to 30 000 RPM allows performance machining of very small diameters. The reduction bush (6-4 mm) with orientation flat and pin for fitting the solid boring tools is part of the head delivery content.
Axiabore™ head Part No. A76002 and C3-391.0760-02  	Small heads for fine boring ∅ 2 – 20 mm: External diameter 36,5 mm, length 32 mm, with Graflex® connection size G3 and Seco-Capto™ connection size C3, tool fitting ∅ 12 mm. These heads sizes are optimised for difficult-to-access bores. The reduction bush (12-4 mm) with orientation flat and pin for fitting the solid boring tools is part of the head delivery content. Note: Smaller tools from Nanobore™ (0,3 to 2,1 mm) can also be fitted, but the machining speed will be limited to 12000 RPM: Nanobore® head should be preferred.
Axialibrabore™ head Part No. A76012 	Small balanceable head for fine boring ∅ 2 – 20 mm: Same features as the Axiabore™ head, but with fine balancing (body length 50 mm). With Graflex® connection size G3. Fine balanceable heads allow higher speeds up to 24 000 RPM or 1500 m/min (whichever is reached first without exceeding either of them), improve the hole geometry and reduce the machine spindle stress. 'LibraOne' balancing is performed by setting the graduated balancing ring (in accordance with the balancing code of the tool used, and the diameter to be bored) in line with the mark on the boring head. No chart needed.

Features

Axiabore™ Plus - head Part No. A76003 and C5-391.0760-03 	Multi-purpose heads for fine boring ∅ 6 to 108 mm, OD-overturning ∅ 2 to 57 mm and grooving ∅ 19 to 96 mm: External diameter 54 mm, length 45 mm, with Graflex® connection size 5 and Seco-Capto™ connection size 5, tool fitting ∅ 16 mm. Suitable tools: all tools with shank ∅ 16 mm, for direct fitting into the heads.
	This head has also been designed to be equipped with the MPA (multi-purpose adapter), to perform large diameter fine boring, OD–overturning and face grooving.
	
Axialibrabore™ Plus - head Part No. A76013 	Balanceable head for fine boring ∅ 6 to 33 mm: Same features as the - Axiabore™ Plus - head, but with fine balancing (body length 65 mm). With Graflex® connection size G5. Fine balanceable heads allow higher speeds up to 20 000 RPM or 1500 m/min (whichever is reached first without exceeding either of them), improve the hole geometry and reduce the machine spindle stress. 'LibraOne' balancing is performed by setting the graduated balancing ring in line with the mark on the boring head (balancing code of the tool used, and the diameter to be bored). No chart needed. Fine balancing is only possible for the smallest boring tools (∅ 6 to 33 mm). Note: if using a larger 'Alu', or a 'MPA' tool from the - Axiabore™ Plus - onto the - Axialibrabore™ Plus - head, fine balancing is not possible and the balancing ring should be set in the head's pre-balancing position (depending on the operation to be performed, see Instructions chapter). The maximum speed becomes the same as for the - Axiabore™ Plus.

Features

Axiabore™ type kits

Note: The Axiabore™ type heads are available on their own (head + reduction bush, setting keys and operating instruction), or as kits delivered in a protective case.
Ten kits are available, see Product page for content details.

Nanobore™ kit: 	Includes the head, the reduction bush, a complete set of tools (cap. ∅ 0,3-8 mm), setting keys and operating instructions as well as a magnifying glass.
Axiabore™ (A & B) kits and Axialibrabore™ (A & B) kits: 	Kit A includes the head, a selection of boring tools and insert holders (∅ 6-20 mm), setting keys and operating instructions. Kit B includes the content of kit A with a larger selection of tools (∅ 2-20 mm).
Axiabore™ Plus - (A & B) kits and Axialibrabore™ Plus - (A & B) kits: 	Kit A includes the head, a selection of boring tools and insert holders (∅ 6-33 mm), setting keys and operating instructions. Kit B includes the content of kit A with a larger selection of tools (∅ 6-63 mm).
Face grooving and OD-overturning tools kit: 	Includes the MPA (multi-purpose adapter), the serrated shank and two insert holders for boring and OD-overturning, the counterweight and the serrated grooving toolholders 'I' and 'E'. These tools are suitable for the - Axiabore™ Plus - head.

EPB 760 – Axiabore™ type heads, not balanceable

Graflex®



- With micrometric adjusting (increment 0,01 mm and vernier 2,5 µm, on the diameter)
- Axiabore™ Plus – allows boring, as well as OD-overturning and face grooving

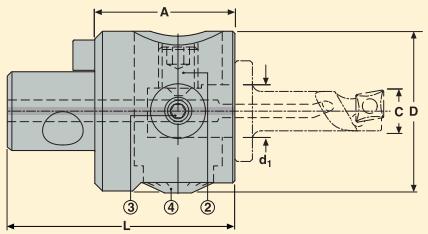

2. Tool fixing screw
3. Locking screw
4. Micrometric adjusting screw

Graflex size	Capacity C ∅ mm	***	Part No.	Dimensions in mm A	D	L	d_1	Max operating speed** Max rpm	Max m/min	****	* KG
G2	0.3-8		A76001	25	25	41	6	30000	1500		0,1
G3	2-20		A76002	32	36,5	52	12	12000	1500		0,29
G5	6-108	***	A76003	45	54	75	16	8000	1000	****	0,82

For tools, see pages 512-514. * Without tool. ** Maximum speed, whichever is reached first without exceeding either of them.
*** Capacities - Axiabore™ Plus - head for boring 6 to 108 mm, OD-overturning 2 to 57 mm, face grooving 19 to 96 mm. **** Max 5000 RPM when using MPA.

Spare parts

For head	Tool fixing screw	Reduction bush	Locking screw	Key
A760 01	950A0406	05A7600604	19M4001A	H2.0-2D
A760 02	AU7601212	05A7601204	19A71030	03M03C
A760 03	AU7601312	–	19A71008125	H04-4

Accessories*

Storage case	Magnifying glass
41B76001	935L01
42M06	–
42M07	–

Please check availability in current price and stock-list.
* Accessories not included in delivery.

EPB 760 – Axiabore™ type heads, balanceable

Graflex®



- LibraOne built-in balancing system based on a single balancing setting ring
- With micrometric adjusting (increment 0,01 mm and vernier 2,5 µm, on the diameter)

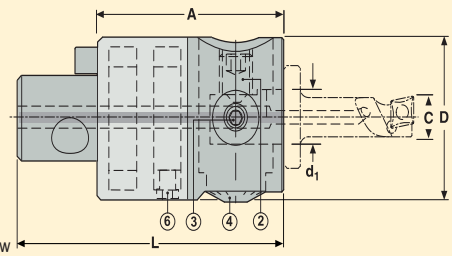

2. Tool fixing screw
3. Clamp
4. Micrometric adjustung screw
6. Locking screw

Graflex size	Capacity C ∅ mm	***	Part No.	Dimensions in mm A	D	L	d_1	Max operating speed** Max rpm	Max m/min	* KG
G3	2-20		A76012	50	36,5	70	12	24000	1500	0,39
G5	6-33	***	A76013	65	54	95	16	20000	1500	1,16

For tools, see pages 512-514. * Without tool. ** Maximum speed, whichever is reached first without exceeding either of them. *** Capacities – Axialibrabore™ Plus - head, with balancing.

Spare parts

For head	Tool fixing screw	Reduction bush	Locking screw	Key	Clamp
A760 12	AU7601212	05A7601204	AU7601218	03M03C	19A71030
A760 13	AU7601312	–	AU7601318	H04-4	19A71008125

Accessories*

Storage case
42M06
42M07

Please check availability in current price and stock-list.
* Accessories not included in delivery.

EPB 760 – Axiabore™ type heads

Seco-Capto™



- With micrometric adjusting (increment 0,01 mm and vernier 2,5 µm, on the diameter)
- Axiabore™ Plus – allows boring, as well as OD-overturning and face grooving

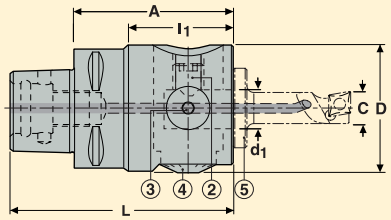

2. Tool fixing screw
3. Clamp
4. Micrometric adjusting screw
5. Tool

Capto size	Capacity C ∅ mm	**	Part No.	Dimensions in mm A	D	L	l_1	d_1	Max operating speed Max rpm	Max m/min	***	* KG
C3	2-20		C3-391.0760-02	46	36,5	65	30	12	12000	1500		0,33
C5	6-108	**	C5-391.0760-03	65	54	95	44	16	8000	1500	***	1,12

For tools (5), see pages 512-514. * Without tool.
** Capacities - Axiabore™ Plus - head for boring 6 to 108 mm, OD-overturning 2 to 57 mm, face grooving 19 to 96 mm. *** Max 5000 RPM when using MPA.

Spare parts

For head	Tool fixing screw	Reduction bush	Key	Clamp
C3...02	AU7601212	05A7601204	03M03C	19A71030
C5...03	AU7601312	–	H04-4	19A71008125

Please check availability in current price and stock-list.

Fine boring heads, Axiabore™

Boring tools, solid carbide, for EPB 760 heads



- Cutting edge orientation ISO
- Coolant along the tool

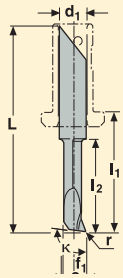

Tool material*	For head	d_1 mm	Capacity C ∅ mm***	Part No.	κ°	Dimensions in mm L	l_1	l_2	a	f_1	r	Recommended cutting data** a_p (mm)	f (mm)	KG	Balancing code
Solid carbide	EPB 76001	4	0.3-0.6	A761402	98	30,7	15,5	1.2	0,25	0,10	–	0,02	0,01	0,01	–
	EPB 76001	4	0.5-1.1	A761412	98	30,7	15,5	2	0,45	0,20	–	0,02	0,01	0,01	–
	EPB 76001	4	1-2.1	A761422	98	30,7	15,5	5	0,95	0,45	0,10	0,03	0,02	0,01	–
	EPB 76001/02/12	4	2-3.2	A761432	98	30,7	15,5	8	1,80	0,88	0,10	0,05	0,02	0,01	E13
	EPB 76001/02/12	4	3-4.7	A761442	98	30,7	15,5	10	2,75	1,35	0,15	0,06	0,03	0,01	E14
	EPB 76001/02/12	4	4.5-6.2	A761452	98	35,7	20,5	15	3,95	1,95	0,15	0,08	0,03	0,01	E15

Please check availability in current price and stock-list.

* These tools with shank dia 4 mm require the use of a reduction bush, delivered with the suitable heads and kits. ** For cutting speeds, see page 596-597 .

*** +0,1 mm complementary capacity achievable.

Boring bars, insert type, for EPB 760 heads



- Cutting edge orientation ISO
- Through coolant
- Only two insert sizes for all tools

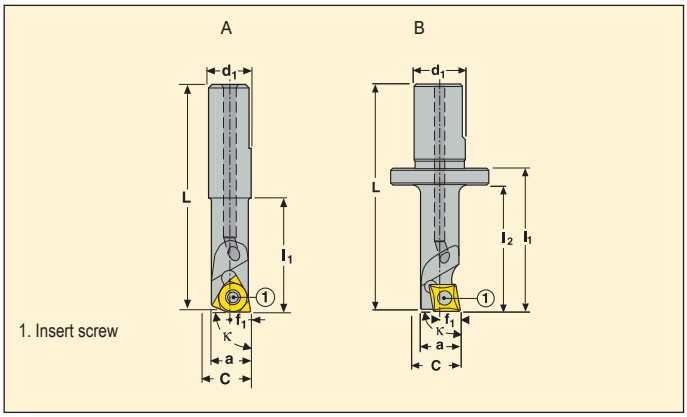

Tool material	For head	Capacity C ∅ mm**	Part No.	κ°	Dimensions in mm L	l_1	l_2	d_1	a	f_1	Suitable insert size	Design	KG	Balancing code
Steel, indexable insert type	EPB 76001	6-8	A762001	90	31,7	16	–	6	5,50	2,9	WB..0301..	A	0,01	–
	EPB 76002/12	6-8	A762002	90	39,7	20	16	12	5,50	2,9	WB..0301..	B	0,03	S21
	EPB 76003/13	6-8	A762003	90	50,2	21	16	16	5,50	2,9	WB..0301..	B	0,07	S31
	EPB 76002/12	8-10	A763002	90	45,7	26	22	12	7,40	3,9	WB..0301..	B	0,04	S22
	EPB 76003/13	8-10	A763003	90	56,2	27	22	16	7,40	3,9	WB..0301..	B	0,08	S32
	EPB 76002/12	10-13	A765002	90	53,5	34	30	12	9,35	4,8	CC..0602..	B	0,04	S23
	EPB 76003/13	10-13	A765003	90	64,0	35	30	16	9,35	4,8	CC..0602..	B	0,08	S33
Carbide, indexable insert type	EPB 76001	6-8	A762201	90	41,7	26	–	6	5,50	2,9	WB..0301..	A	0,02	–
	EPB 76002/12	6-8	A762202	90	50,7	31	27	12	5,50	2,9	WB..0301..	B	0,06	E21
	EPB 76003/13	6-8	A762203	90	61,2	32	27	16	5,50	2,9	WB..0301..	B	0,13	E31
	EPB 76002/12	8-10	A763202	90	60,7	41	37	12	7,40	3,9	WB..0301..	B	0,07	E22
	EPB 76003/13	8-10	A763203	90	71,2	42	37	16	7,40	3,9	WB..0301..	B	0,14	E32
	EPB 760 02/12	10-13	A765202	90	78,5	59	55	12	9,35	4,8	CC..0602..	B	0,09	E23
	EPB 760 03/13	10-13	A765203	90	89,0	60	55	16	9,35	4,8	CC..0602..	B	0,17	E33

** +0,2 mm complementary capacity achievable.

Spare parts

For insert size	Insert screw
CC...0602..	C02504-T07P
WB...0301..	C02504-T07P

Accessories*

Insert key
T07P-3
T06P-3

Please check availability in current price and stock-list.
* Accessories not included in delivery.

Boring shanks, for modular fine boring bars, for EPB 760 heads



- Several capacities achievable by interchangeable insert holders
- Shank types 'steel' for short bars, 'carbide' for long bars, 'aluminium' for large bars
- Through coolant

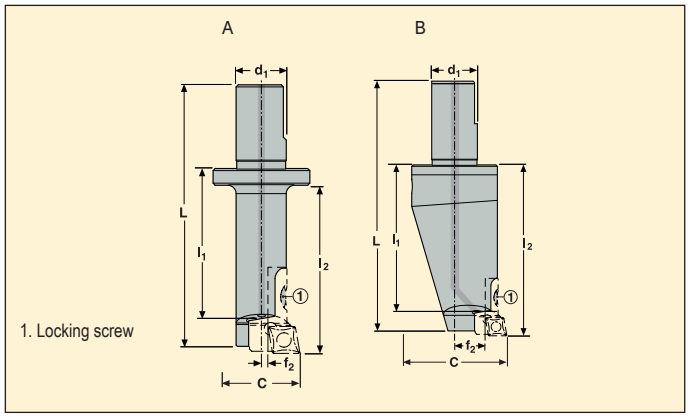

Modular boring shank type	For head	***	Capacity C ∅ mm**	Part No.	Dimensions in mm L	l_1	l_2	d_1	f_2	Design	KG*
Steel	EPB A76002/12		13-20	A760S20	62,5	34	40	12	1,4	A	0,06
	EPB A76003/13		13-18	A760S30	73	35	40	16	1,4	A	0,1
	EPB A76003/13		18-33	A760S31	83	45	55	16	3,9	A	0,13
Carbide	EPB A76002/12		13-20	A760E20	82,5	54	60	12	1,4	A	0,2
	EPB A76003/13		13-18	A760E30	103	65	75	16	1,4	A	0,21
	EPB A76003/13		18-33	A760E31	113	75	85	16	3,9	A	0,3
Aluminium	EPB A76003	***	33-48	A760A32	88	50	60	16	11,5	B	0,14
	EPB A76003	***	48-63	A760A33	108	70	80	16	19	B	0,34

* Without insert holder. ** +0,2 mm complementary capacity achievable. *** When used on A760 13, no fine balancing possible.
Select the required shank and insert holder(s) combination(s) using the selection chart on page 516.

Spare parts

For	Locking screw
All boring shanks	C04008-T15P

Accessories*

Locking key
T15P-3

Please check availability in current price and stock-list.
* Accessories not included in delivery.

Insert holders, for modular fine boring bars, for EPB 760 heads



- Single fitting size suitable for all boring (and OD-overturning) shanks
- One insert size for all insert holders

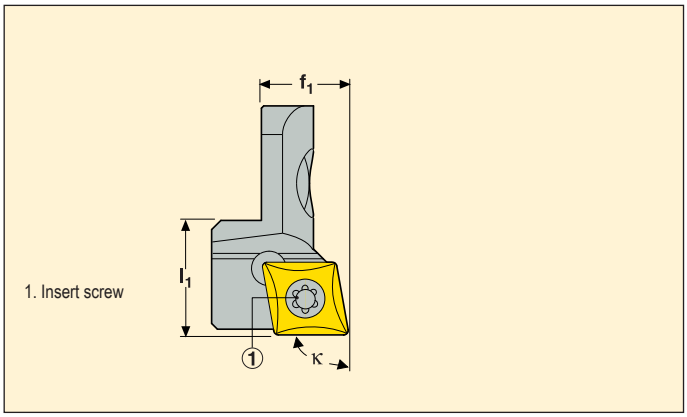

	Part No.	Dimensions in mm l_1	Dimensions in mm f_1*	Suitable insert size	κ°	KG
Insert holder	A765R1	10	4,95	CC..0602..	90	0,01
	A765R2	10	6,2	CC..0602..	90	0,01
	A765R3	10	7,45	CC..0602..	90	0,01
	A765R4	10	8,7	CC..0602..	90	0,01
	A765R5	10	9,97	CC..0602..	90	0,01
	A765R6	10	11,2	CC..0602..	90	0,01

* f_1 when fitted with insert type CC..060204.
Select the required shank and insert holder(s) combination(s) using the selection chart on page 516.

Spare parts

For insert size	Insert screw
CC...0602...	C02504-T07P

Accessories*

Insert key
T07P-3

Please check availability in current price and stock-list.
* Accessories not included in delivery.

Selection chart: Boring tools and insert holders suitable for EPB 760 heads

For head	Boring capacity C ∅ mm	Boring length l mm	Part No. Boring tool	Part No. Insert holder	d_1 mm	Suitable insert size	Tool type
A760 01	0,3-0,6	1,2	A761 402	–	4	–	Solid carbide
	0,5-1,1	2	A761 412	–	4	–	Solid carbide
	1-2,1	5	A761 422	–	4	–	Solid carbide
	2-3,2	8	A761 432	–	4	–	Solid carbide
	3-4,7	10	A761 442	–	4	–	Solid carbide
	4,5-6,2	15	A761 452	–	4	–	Solid carbide
	6-8	16	A762 001	–	6	WB..0301..	Steel, insert type
	6-8	26	A762 201	–	6	WB..0301..	Carbide, insert type
A760 02/ A760 12	2-3,2	8	A761 432	–	4	–	Solid carbide
	3-4,7	10	A761 442	–	4	–	Solid carbide
	4,5-6,2	15	A761 452	–	4	–	Solid carbide
	6-8	16	A762 002	–	12	WB..0301..	Steel, insert type
	6-8	27	A762 202	–	12	WB..0301..	Carbide, insert type
	8-10	22	A763 002	–	12	WB..0301..	Steel, insert type
	8-10	37	A763 202	–	12	WB..0301..	Carbide, insert type
	10-13	30	A765 002	–	12	CC..0602..	Steel, insert type
	10-13	55	A765 202	–	12	CC..0602..	Carbide, insert type
	13-15,5	40	A760 S20	A765 R1	12	CC..0602..	Steel shank with insert holder
	13-15,5	60	A760 E20	A765 R1	12	CC..0602..	Carbide shank with insert holder
	15,5-18	40	A760 S20	A765 R2	12	CC..0602..	Steel shank with insert holder
	15,5-18	60	A760 E20	A765 R2	12	CC..0602..	Carbide shank with insert holder
	18-20	40	A760 S20	A765 R3	12	CC..0602..	Steel shank with insert holder
	18-20	60	A760 E20	A765 R3	12	CC..0602..	Carbide shank with insert holder
A760 03/ A760 13	6-8	16	A762 003	–	16	WB..0301..	Steel, insert type
	6-8	32	A762 203	–	16	WB..0301..	Carbide, insert type
	8-10	22	A763 003	–	16	WB..0301..	Steel, insert type
	8-10	37	A763 203	–	16	WB..0301..	Carbide, insert type
	10-13	30	A765 003	–	16	CC..0602..	Steel, insert type
	10-13	55	A765 203	–	16	CC..0602..	Carbide, insert type
	13-15,5	40	A760 S30	A765 R1	16	CC..0602..	Steel shank with insert holder
	13-15,5	70	A760 E30	A765 R1	16	CC..0602..	Carbide shank with insert holder
	15,5-18	40	A760 S30	A765 R2	16	CC..0602..	Steel shank with insert holder
	15,5-18	70	A760 E30	A765 R2	16	CC..0602..	Carbide shank with insert holder
	18-20,5	50	A760 S31	A765 R1	16	CC..0602..	Steel shank with insert holder
	18-20,5	80	A760 E31	A765 R1	16	CC..0602..	Carbide shank with insert holder
	20,5-23	50	A760 S31	A765 R2	16	CC..0602..	Steel shank with insert holder
	20,5-23	80	A760 E31	A765 R2	16	CC..0602..	Carbide shank with insert holder
	23-25,5	50	A760 S31	A765 R3	16	CC..0602..	Steel shank with insert holder
	23-25,5	80	A760 E31	A765 R3	16	CC..0602..	Carbide shank with insert holder
	25,5-28	50	A760 S31	A765 R4	16	CC..0602..	Steel shank with insert holder
	25,5-28	80	A760 E31	A765 R4	16	CC..0602..	Carbide shank with insert holder
	28-30,5	50	A760 S31	A765 R5	16	CC..0602..	Steel shank with insert holder
	28-30,5	80	A760 E31	A765 R5	16	CC..0602..	Carbide shank with insert holder
	30,5-33	50	A760 S31	A765 R6	16	CC..0602..	Steel shank with insert holder
	30,5-33	80	A760 E31	A765 R6	16	CC..0602..	Carbide shank with insert holder
	33-33,5*	60	A760 A32	A765 R1	16	CC..0602..	Aluminium shank with insert holder
	35,5-38*	60	A760 A32	A765 R2	16	CC..0602..	Aluminium shank with insert holder
	38-40,5*	60	A760 A32	A765 R3	16	CC..0602..	Aluminium shank with insert holder
	40,5-43*	60	A760 A32	A765 R4	16	CC..0602..	Aluminium shank with insert holder
	43-45,5*	60	A760 A32	A765 R5	16	CC..0602..	Aluminium shank with insert holder
	45,5-48*	60	A760 A32	A765 R6	16	CC..0602..	Aluminium shank with insert holder
	48-50,5*	80	A760 A33	A765 R1	16	CC..0602..	Aluminium shank with insert holder
	50,5-53*	80	A760 A33	A765 R2	16	CC..0602..	Aluminium shank with insert holder
	53-55,5*	80	A760 A33	A765 R3	16	CC..0602..	Aluminium shank with insert holder
	55,5-58*	80	A760 A33	A765 R4	16	CC..0602..	Aluminium shank with insert holder
	58-60,5*	80	A760 A33	A765 R5	16	CC..0602..	Aluminium shank with insert holder
	60,5-63*	80	A760 A33	A765 R6	16	CC..0602..	Aluminium shank with insert holder

For larger diameters, see Multi-purpose adapter (MPA) section.

* When used on A760 13, no fine balancing possible.

Multi-purpose adapter (MPA), for EPB 760 heads



- Suitable for - Axiabore™ Plus - A760 03 head only*
- Designed to hold a shank and a counterweight (for boring or OD-overturning) or two grooving tool holders (for face grooving)
- Through coolant with an adjustable nozzle (3)

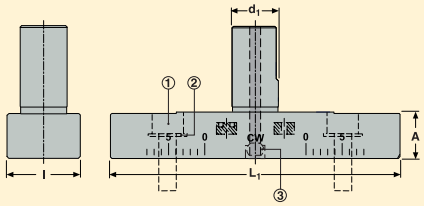

1. Clamp screw
2. Washer
3. Adjustable nozzle

Capacity C ∅ mm			d_1 mm	Part No.	Dimensions in mm			KG
For boring ∅ (mm)	For OD-overturning ∅ (mm)	For grooving ∅ (mm)			L_1	l	A	
53-108	2-57	19-96	16	BDA16BS25100	100	25	16	0,28

* When used on an - Axialibrabore™ Plus - A760 13 head, no fine balancing possible, see page 507.
Select the required components to realise boring, OD-overturning or grooving assemblies, using following pages 521-526.

Spare parts

For	Washer	Clamp screw
BDA16 BS25100	940ZC06	950D0618

Accessories*

Clamp key
03HL05

Please check availability in current price and stock-list.
* Accessories not included in delivery.

Shank & counterweight, for boring or OD-overturning on a MPA, for EPB 760 heads



- For fitting on to the MPA
- Shank can be used for boring or OD-overturning
- Takes the same insert holders as the modular boring shanks

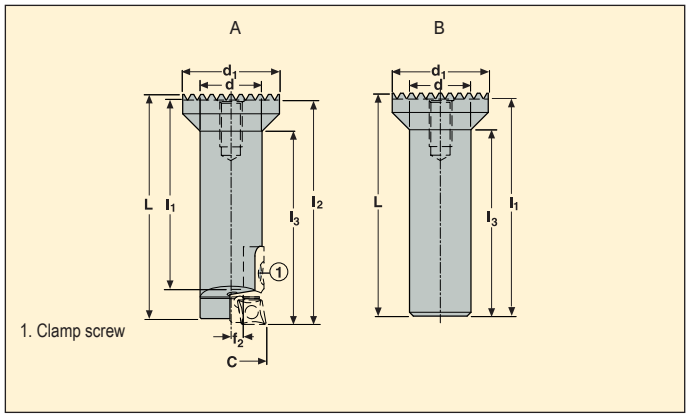

Type	Capacity C ∅ mm** For boring ∅ (mm)	For OD-overturning ∅ (mm)	d (mm)	d_1 mm	Part No.	Dimensions in mm L	l_1	l_2	l_3	f_2	Design	KG
Shank*	53-108	2-57	16	25	BAS25MH1660	58,5	48,5	58.5	50	4,0	A	0,1
Counterweight	53-108	2-57	16	25	BAS25CW1660	58	56,6	–	48,5	–	B	0,11

* Insert holders to be ordered separately, see page 515. ** Capacities in boring and OD-overturning are related to the selected insert holder and the setting position of the shanks using the 'Insert holders for boring or OD-overturning selection chart' on pages 521-526.

Spare parts

For	Clamp screw
BAS25 MH1660	C04008-T15P

Accessories*

Clamp key
T15P-3

Please check availability in current price and stock-list.
* Accessories not included in delivery.

Grooving tool holders, for face grooving on a MPA, for EPB 760 heads



- For fitting on the MPA
- A grooving tool holder is used either to hold a grooving tool, or to act as a counterweight

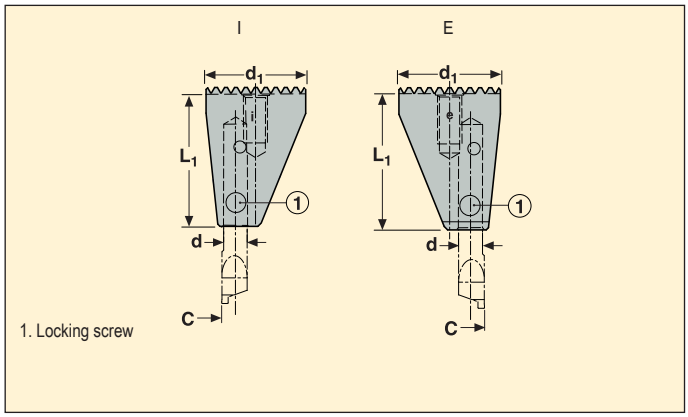

1. Locking screw

Type	Capacity C ∅ mm**	d_1 mm	Part No.	Dimensions in mm		Design	KG
				d	L_1		
Grooving tool holder I (internal)*	19-76	25	BAS25FGI35	6	34	I (Internal)	0,1
Grooving tool holder E (external)*	39-96	25	BAS25FGE35	6	34	E (External)	0,1

* Grooving tools to be ordered separately, see page 520. ** Capacity in grooving is related to the selected grooving tool, the setting position and orientation of the grooving tool holder, using the ' Grooving tool against spigot (or against bore) selection charts' see pages 523-526.

Spare parts

For	Locking screw
	
BAS25 FGI35	950L0607T15P
BAS25 FGI35	950L0607T15P

Accessories*

Locking key
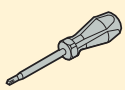
T15P-3
T15P-3

Please check availability in current price and stock-list.
* Accessories not included in delivery.

Grooving tools, for EPB 760 heads



- Can be used for either 'external' or 'internal' grooving tool holders, depending on capacity

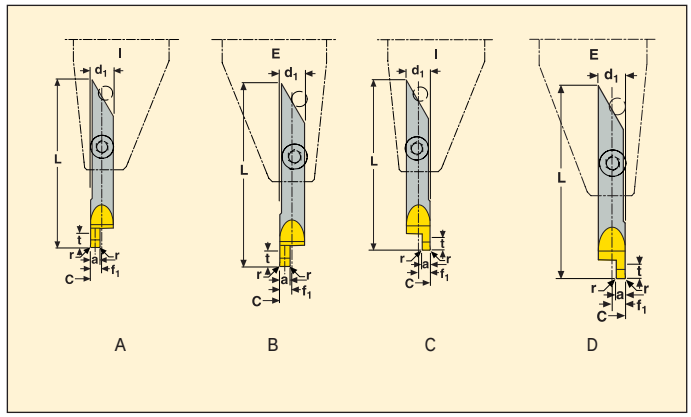

	Capacity C ∅ mm*				a	d_1 mm	Part No.	Dimensions in mm			Groove max. depth t	KG
	Design A	Design B	Design C	Design D				L	f_1	r		
Grooving tool -against spigot-	19-64	39-84	–	–	1	6	AFG0629101582	42	2,95	0,15	2	0,07
	19-64	39-84	–	–	1,5	6	AFG0629151582	42	2,95	0,15	3	0,07
	19-64	39-84	–	–	2	6	AFG0629201582	42	2,95	0,15	5	0,07
	19-64	39-84	–	–	2,5	6	AFG0629251582	42	2,95	0,15	5	0,07
	19-64	39-84	–	–	3	6	AFG0629301582	42	2,95	0,15	6	0,07
Grooving tool -against bore-	–	–	31-76	51-96	1	6	AFG0629101581	42	2,95	0,15	2	0,02
	–	–	31-76	51-96	1,5	6	AFG0629151581	42	2,95	0,15	3	0,07
	–	–	31-76	51-96	2	6	AFG0629201581	42	2,95	0,15	4	0,07
	–	–	31-76	51-96	2,5	6	AFG0629251581	42	2,95	0,15	5	0,07
	–	–	31-76	51-96	3	6	AFG0629301581	42	2,95	0,15	6	0,07

* Capacity in grooving is related to the selected grooving tool and the setting position and orientation of the grooving tool holder, using the 'Grooving tool against spigot (or against bore) selection charts' see pages 523-526.

Grooving tool -against spigot-

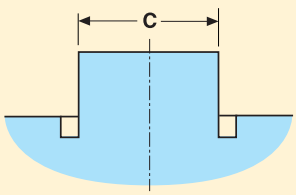

Grooving tool -against bore-

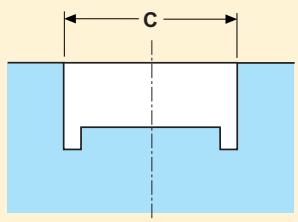

Please check availability in current price and stock-list.

Selection chart: Insert holders for boring with MPA for EPB 760 heads

Select a suitable insert holder, and note the shank position on the MPA to obtain the required bore capacity.
Note : A boring assembly requires :
- an - Axiabore™ Plus - head (A760 03)
- a MPA (BDA16BS25100)
- a shank (BAS25MH1660)
- a counterweight (BAS25CW1660).
- an insert holder (A765R.) to be selected in the chart
- an insert

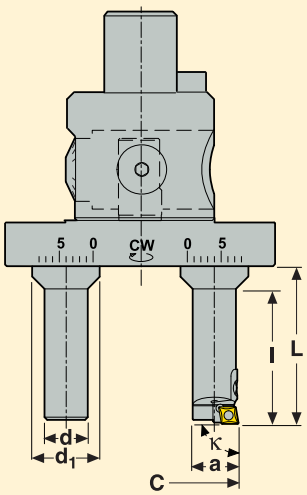

Capacity C ∅ mm*	Insert holder Part No.	Shank position	Dimensions in mm					Lead angle κ°	Suitable insert size
			d	d_1	L	l	a		
53-55,5	A765 R1	0	16	25	58,5	50	17	90°	CC..0602..
55,5-58	A765 R2	0	16	25	58,5	50	18,2	90°	CC..0602..
58-60,5	A765 R1	1	16	25	58,5	50	17	90°	CC..0602..
	A765 R3	0	16	25	58,5	50	19,5	90°	CC..0602..
60,5-63	A765 R2	1	16	25	58,5	50	18,2	90°	CC..0602..
	A765 R4	0	16	25	58,5	50	20,7	90°	CC..0602..
63-65,5	A765 R1	2	16	25	58,5	50	17	90°	CC..0602..
	A765 R3	1	16	25	58,5	50	19,5	90°	CC..0602..
	A765 R5	0	16	25	58,5	50	22	90°	CC..0602..
65,5-68	A765 R2	2	16	25	58,5	50	18,2	90°	CC..0602..
	A765 R4	1	16	25	58,5	50	20,7	90°	CC..0602..
	A765 R6	0	16	25	58,5	50	23,3	90°	CC..0602..
68-70,5	A765 R1	3	16	25	58,5	50	17	90°	CC..0602..
	A765 R3	2	16	25	58,5	50	19,5	90°	CC..0602..
	A765 R5	1	16	25	58,5	50	22	90°	CC..0602..
70,5-73	A765 R2	3	16	25	58,5	50	18,2	90°	CC..0602..
	A765 R4	2	16	25	58,5	50	20,7	90°	CC..0602..
	A765 R6	1	16	25	58,5	50	23,2	90°	CC..0602..
73-75,5	A765 R1	4	16	25	58,5	50	17	90°	CC..0602..
	A765 R3	3	16	25	58,5	50	19,5	90°	CC..0602..
	A765 R5	2	16	25	58,5	50	22	90°	CC..0602..
75,5-78	A765 R2	4	16	25	58,5	50	18,2	90°	CC..0602..
	A765 R4	3	16	25	58,5	50	20,7	90°	CC..0602..
	A765 R6	2	16	25	58,5	50	23,2	90°	CC..0602..
78-80,5	A765 R1	5	16	25	58,5	50	17	90°	CC..0602..
	A765 R3	4	16	25	58,5	50	19,5	90°	CC..0602..
	A765 R5	3	16	25	58,5	50	22	90°	CC..0602..
80,5-83	A765 R2	5	16	25	58,5	50	18,2	90°	CC..0602..
	A765 R4	4	16	25	58,5	50	20,7	90°	CC..0602..
	A765 R6	3	16	25	58,5	50	23,2	90°	CC..0602..
83-85,5	A765 R1	6	16	25	58,5	50	17	90°	CC..0602..
	A765 R3	5	16	25	58,5	50	19,5	90°	CC..0602..
	A765 R5	4	16	25	58,5	50	22	90°	CC..0602..
85,5-88	A765 R2	6	16	25	58,5	50	18,2	90°	CC..0602..
	A765 R4	5	16	25	58,5	50	20,7	90°	CC..0602..
	A765 R6	4	16	25	58,5	50	23,2	90°	CC..0602..
88-90,5	A765 R1	7	16	25	58,5	50	17	90°	CC..0602..
	A765 R3	6	16	25	58,5	50	19,5	90°	CC..0602..
	A765 R5	5	16	25	58,5	50	22	90°	CC..0602..
90,5-93	A765 R2	7	16	25	58,5	50	18,2	90°	CC..0602..
	A765 R4	6	16	25	58,5	50	20,7	90°	CC..0602..
	A765 R6	5	16	25	58,5	50	23,2	90°	CC..0602..
93-95,5	A765 R1	8	16	25	58,5	50	17	90°	CC..0602..
	A765 R3	7	16	25	58,5	50	19,5	90°	CC..0602..
	A765 R5	6	16	25	58,5	50	22	90°	CC..0602..
95,5-98	A765 R2	8	16	25	58,5	50	18,2	90°	CC..0602..
	A765 R4	7	16	25	58,5	50	20,7	90°	CC..0602..
	A765 R6	6	16	25	58,5	50	23,2	90°	CC..0602..
98-100,5	A765 R3	8	16	25	58,5	50	19,5	90°	CC..0602..
	A765 R5	7	16	25	58,5	50	22	90°	CC..0602..
100,5-103	A765 R4	8	16	25	58,5	50	20,7	90°	CC..0602..
	A765 R6	7	16	25	58,5	50	23,2	90°	CC..0602..
103-105,5	A765 R5	8	16	25	58,5	50	22	90°	CC..0602..
105,5-108	A765 R6	8	16	25	58,5	50	23,2	90°	CC..0602..

* +0,2 mm complementary capacity achievable.

Detailed description of insert holders, see page 515.

Selection chart: Insert holders for OD-overturning with MPA, for EPB 760 heads

Select a suitable insert holder, and note the shank position on the MPA to obtain the required OD-overturning capacity.
Note : A boring assembly requires :
- an - Axiabore™ Plus - head (A760 03)
- a MPA (BDA16BS25100)
- a shank (BAS25MH1660)
- a counterweight (BAS25CW1660).
- an insert holder (A765R.) to be selected in the chart
- an insert

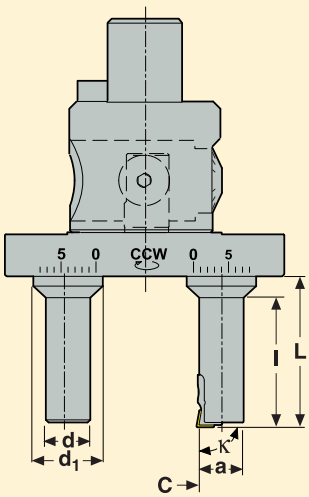

Capacity C ∅ mm*	Insert holder Part No.	Setting position	Dimensions in mm d	d_1	L	l	a	Lead angle κ°	Suitable insert size
2-4,5	A765 R6	0	16	25	58,5	50	23,2	90°	CC..0602..
4,5-7	A765 R5	0	16	25	58,5	50	22	90°	CC..0602..
7-9,5	A765 R6	1	16	25	58,5	50	23,2	90°	CC..0602..
	A765 R4	0	16	25	58,5	50	20,7	90°	CC..0602..
9,5-12	A765 R5	1	16	25	58,5	50	22	90°	CC..0602..
	A765 R3	0	16	25	58,5	50	19,5	90°	CC..0602..
12-14,5	A765 R6	2	16	25	58,5	50	23,2	90°	CC..0602..
	A765 R4	1	16	25	58,5	50	20,7	90°	CC..0602..
	A765 R2	0	16	25	58,5	50	18,2	90°	CC..0602..
14,5-17	A765 R5	2	16	25	58,5	50	22	90°	CC..0602..
	A765 R3	1	16	25	58,5	50	19,5	90°	CC..0602..
	A765 R1	0	16	25	58,5	50	17	90°	CC..0602..
17-19,5	A765 R6	3	16	25	58,5	50	23,2	90°	CC..0602..
	A765 R4	2	16	25	58,5	50	20,7	90°	CC..0602..
	A765 R2	1	16	25	58,5	50	18,2	90°	CC..0602..
19,5-22	A765 R5	3	16	25	58,5	50	22	90°	CC..0602..
	A765 R3	2	16	25	58,5	50	19,5	90°	CC..0602..
	A765 R1	1	16	25	58,5	50	17	90°	CC..0602..
22-24,5	A765 R6	4	16	25	58,5	50	23,2	90°	CC..0602..
	A765 R4	3	16	25	58,5	50	20,7	90°	CC..0602..
	A765 R2	2	16	25	58,5	50	18,2	90°	CC..0602..
24,5-27	A765 R5	4	16	25	58,5	50	22	90°	CC..0602..
	A765 R3	3	16	25	58,5	50	19,5	90°	CC..0602..
	A765 R1	2	16	25	58,5	50	17	90°	CC..0602..
27-29,5	A765 R6	5	16	25	58,5	50	23,2	90°	CC..0602..
	A765 R4	4	16	25	58,5	50	20,7	90°	CC..0602..
	A765 R2	3	16	25	58,5	50	18,2	90°	CC..0602..
29,5-32	A765 R5	5	16	25	58,5	50	22	90°	CC..0602..
	A765 R3	4	16	25	58,5	50	19,5	90°	CC..0602..
	A765 R1	3	16	25	58,5	50	17	90°	CC..0602..
32-34,5	A765 R6	6	16	25	58,5	50	23,2	90°	CC..0602..
	A765 R4	5	16	25	58,5	50	20,7	90°	CC..0602..
	A765 R2	4	16	25	58,5	50	18,2	90°	CC..0602..
34,5-37	A765 R5	6	16	25	58,5	50	22	90°	CC..0602..
	A765 R3	5	16	25	58,5	50	19,5	90°	CC..0602..
	A765 R1	4	16	25	58,5	50	17	90°	CC..0602..
37-39,5	A765 R6	7	16	25	58,5	50	23,2	90°	CC..0602..
	A765 R4	6	16	25	58,5	50	20,7	90°	CC..0602..
	A765 R2	5	16	25	58,5	50	18,2	90°	CC..0602..
39,5-42	A765 R5	7	16	25	58,5	50	22	90°	CC..0602..
	A765 R3	6	16	25	58,5	50	19,5	90°	CC..0602..
	A765 R1	5	16	25	58,5	50	17	90°	CC..0602..
42-44,5	A765 R6	8	16	25	58,5	50	23,2	90°	CC..0602..
	A765 R4	7	16	25	58,5	50	20,7	90°	CC..0602..
	A765 R2	6	16	25	58,5	50	18,2	90°	CC..0602..
44,5-47	A765 R5	8	16	25	58,5	50	22	90°	CC..0602..
	A765 R3	7	16	25	58,5	50	19,5	90°	CC..0602..
	A765 R1	6	16	25	58,5	50	17	90°	CC..0602..
47-49,5	A765 R4	8	16	25	58,5	50	20,7	90°	CC..0602..
	A765 R2	7	16	25	58,5	50	18,2	90°	CC..0602..
49,5-52	A765 R3	8	16	25	58,5	50	19,5	90°	CC..0602..
	A765 R1	7	16	25	58,5	50	17	90°	CC..0602..
52-54,5	A765 R2	8	16	25	58,5	50	18,2	90°	CC..0602..
54,5-57	A765 R1	8	16	25	58,5	50	17	90°	CC..0602..

* +0,2 mm complementary capacity achievable.

Detailed description of insert holders, see page 515.

Selection chart: Grooving tool -against spigot- for grooving with MPA, for EPB 760 heads

Design 1

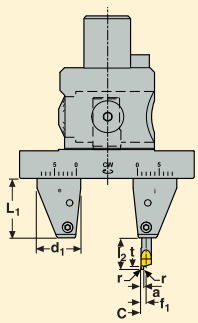

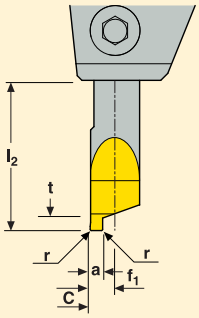

Design 2

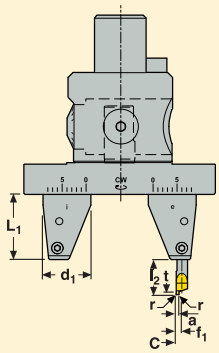

Select the suitable grooving tool, and note the grooving tool holder position on the MPA to obtain the required groove capacity.

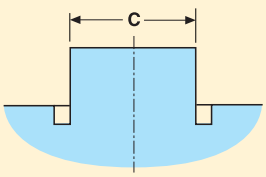

Note : An -against spigot- grooving assembly requires :
- an - Axiabore™ Plus - head (A760 03)
- a MPA (BDA16BS25100)
- an I (internal position) and an E (external position) grooving tool holder (BAS25FGI35 and BAS25FGE35) to either hold a grooving tool or act as a counterweight (see setting position in the chart)
- an -against spigot- grooving tool (AFG...82) to be selected from the chart, related to groove width and diameter.

a	Capacity C ∅ mm*	against spigot grooving tool Part No.	Grooving toolholder position**	Design	Dimensions in mm					Groove max depth t
					d_1	L_1	l_2	f_1	r	
1	19-24	AFG0629 10 1582	0-I	1	25	34	18	2,95	0,15	2
1	24-29		1-I	1	25	34	18	2,95	0,15	2
1	29-34		2-I	1	25	34	18	2,95	0,15	2
1	34-39		3-I	1	25	34	18	2,95	0,15	2
1	39-44		0-E / 4-I	1/2	25	34	18	2,95	0,15	2
1	44-49		1-E / 5-I	1/2	25	34	18	2,95	0,15	2
1	49-54		2-E / 6-I	1/2	25	34	18	2,95	0,15	2
1	54-59		3-E / 7-I	1/2	25	34	18	2,95	0,15	2
1	59-64		4-E / 8-I	1/2	25	34	18	2,95	0,15	2
1	64-69		5-E	2	25	34	18	2,95	0,15	2
1	69-74		6-E	2	25	34	18	2,95	0,15	2
1	74-79		7-E	2	25	34	18	2,95	0,15	2
1	79-84		8-E	2	25	34	18	2,95	0,15	2
1,5	19-24	AFG0629 15 1582	0-I	1	25	34	18	2,95	0,15	3
1,5	24-29		1-I	1	25	34	18	2,95	0,15	3
1,5	29-34		2-I	1	25	34	18	2,95	0,15	3
1,5	34-39		3-I	1	25	34	18	2,95	0,15	3
1,5	39-44		0-E / 4-I	1/2	25	34	18	2,95	0,15	3
1,5	44-49		1-E / 5-I	1/2	25	34	18	2,95	0,15	3
1,5	49-54		2-E / 6-I	1/2	25	34	18	2,95	0,15	3
1,5	54-59		3-E / 7-I	1/2	25	34	18	2,95	0,15	3
1,5	59-64		4-E / 8-I	1/2	25	34	18	2,95	0,15	3
1,5	64-69		5-E	2	25	34	18	2,95	0,15	3
1,5	69-74		6-E	2	25	34	18	2,95	0,15	3
1,5	74-79		7-E	2	25	34	18	2,95	0,15	3
1,5	79-84		8-E	2	25	34	18	2,95	0,15	3
2	19-24	AFG0629 20 1582	0-I	1	25	34	18	2,95	0,15	4
2	24-29		1-I	1	25	34	18	2,95	0,15	4
2	29-34		2-I	1	25	34	18	2,95	0,15	4
2	34-39		3-I	1	25	34	18	2,95	0,15	4
2	39-44		0-E / 4-I	1/2	25	34	18	2,95	0,15	4
2	44-49		1-E / 5-I	1/2	25	34	18	2,95	0,15	4
2	49-54		2-E / 6-I	1/2	25	34	18	2,95	0,15	4
2	54-59		3-E / 7-I	1/2	25	34	18	2,95	0,15	4
2	59-64		4-E / 8-I	1/2	25	34	18	2,95	0,15	4
2	64-69		5-E	2	25	34	18	2,95	0,15	4
2	69-74		6-E	2	25	34	18	2,95	0,15	4
2	74-79		7-E	2	25	34	18	2,95	0,15	4
2	79-84		8-E	2	25	34	18	2,95	0,15	4

* +0,2 mm complementary capacity achievable. ** Recommended values in bold.

Detailed description of the grooving tools, see page 520.

Selection chart: Grooving tool -against spigot- for grooving with MPA, for EPB 760 heads (cont.)

Design 1

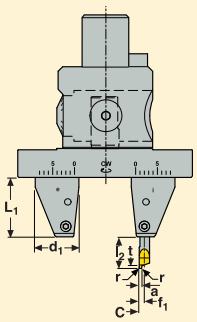

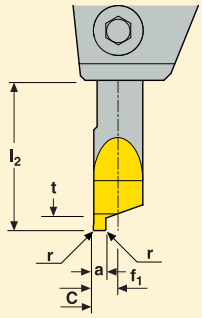

Design 2

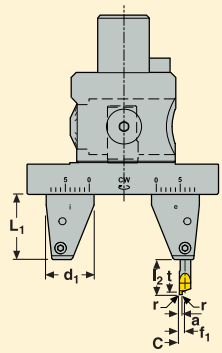

Select the suitable grooving tool, and note the grooving tool holder position on the MPA to obtain the required groove capacity.

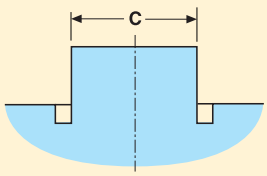

Note : An -against spigot- grooving assembly requires :
- an - Axiabore™ Plus - head (A760 03)
- a MPA (BDA16BS25100)
- an I (internal position) and an E (external position) grooving tool holder (BAS25FGI35 and BAS25FGE35) to either hold a grooving tool or act as a counterweight (see setting position in the chart)
- an -against spigot- grooving tool (AFG...82) to be selected from the chart, related to groove width and diameter.

a	Capacity C ∅ mm*	against spigot grooving tool Part No.	Grooving toolholder position**	Design	Dimensions in mm					Groove max depth t
					d_1	L_1	l_2	f_1	r	
2,5	19-24	AFG0629 25 1582	0-I	1	25	34	18	2,95	0,15	5
2,5	24-29		1-I	1	25	34	18	2,95	0,15	5
2,5	29-34		2-I	1	25	34	18	2,95	0,15	5
2,5	34-39		3-I	1	25	34	18	2,95	0,15	5
2,5	39-44		0-E / 4-I	1/2	25	34	18	2,95	0,15	5
2,5	44-49		1-E / 5-I	1/2	25	34	18	2,95	0,15	5
2,5	49-54		2-E / 6-I	1/2	25	34	18	2,95	0,15	5
2,5	54-59		3-E / 7-I	1/2	25	34	18	2,95	0,15	5
2,5	59-64		4-E / 8-I	1/2	25	34	18	2,95	0,15	5
2,5	64-69		5-E	2	25	34	18	2,95	0,15	5
2,5	69-74		6-E	2	25	34	18	2,95	0,15	5
2,5	74-79		7-E	2	25	34	18	2,95	0,15	5
2,5	79-84		8-E	2	25	34	18	2,95	0,15	5
3	19-24	AFG0629 30 1582	0-I	1	25	34	18	2,95	0,15	6
3	24-29		1-I	1	25	34	18	2,95	0,15	6
3	29-34		2-I	1	25	34	18	2,95	0,15	6
3	34-39		3-I	1	25	34	18	2,95	0,15	6
3	39-44		0-E / 4-I	1/2	25	34	18	2,95	0,15	6
3	44-49		1-E / 5-I	1/2	25	34	18	2,95	0,15	6
3	49-54		2-E / 6-I	1/2	25	34	18	2,95	0,15	6
3	54-59		3-E / 7-I	1/2	25	34	18	2,95	0,15	6
3	59-64		4-E / 8-I	1/2	25	34	18	2,95	0,15	6
3	64-69		5-E	2	25	34	18	2,95	0,15	6
3	69-74		6-E	2	25	34	18	2,95	0,15	6
3	74-79		7-E	2	25	34	18	2,95	0,15	6
3	79-84		8-E	2	25	34	18	2,95	0,15	6

* +0,2 mm complementary capacity achievable. ** Recommended values in bold.

Detailed description of the grooving tools, see page 520.

Selection chart: Grooving tool -against bore- for grooving with MPA, for EPB 760 heads

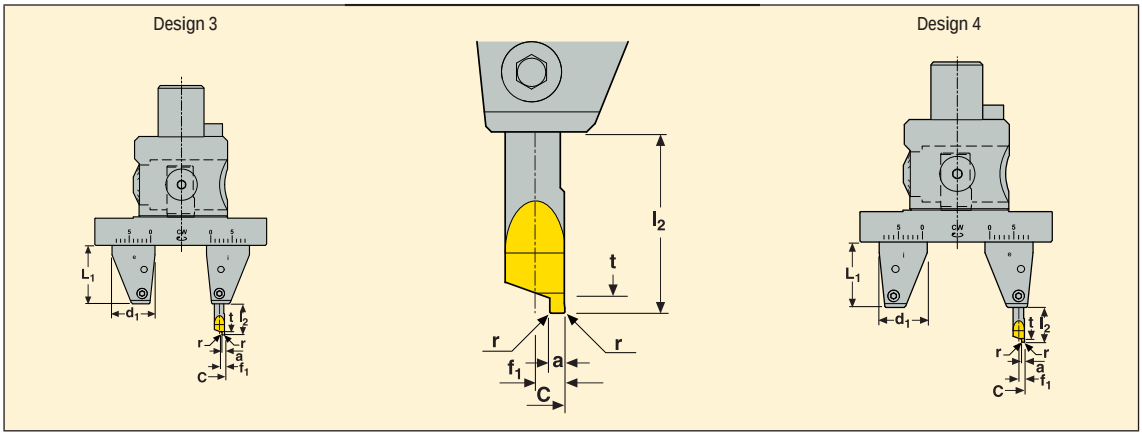

Select the suitable grooving tool, and note the grooving tool holder position on the MPA to obtain the required groove capacity.

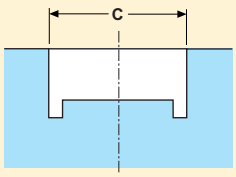

Note : An -against spigot- grooving assembly requires :
- an - Axiabore™ Plus - head (A760 03)
- a MPA (BDA16BS25100)
- an I (internal position) and an E (external position) grooving tool holder (BAS25FGI35 and BAS25FGE35) to either hold a grooving tool or act as a counterweight (see setting position in the chart)
- an -against spigot- grooving tool (AFG...81) to be selected from the chart, related to groove width and diameter.

a	Capacity C ∅ mm*	against bore grooving tool Part No.	Grooving toolholder position**	Design	Dimensions in mm					Groove max depth t
					d_1	L_1	l_2	f_1	r	
1	31-36	AFG0629 10 1581	0-I	3	25	34	18	2,95	0,15	2
1	39-41		1-I	3	25	34	18	2,95	0,15	2
1	41-46		2-I	3	25	34	18	2,95	0,15	2
1	46-51		3-I	3	25	34	18	2,95	0,15	2
1	51-56		0-E / 4-I	3/4	25	34	18	2,95	0,15	2
1	56-61		1-E / 5-I	3/4	25	34	18	2,95	0,15	2
1	61-66		2-E / 6-I	3/4	25	34	18	2,95	0,15	2
1	66-71		3-E / 7-I	3/4	25	34	18	2,95	0,15	2
1	71-76		4-E / 8-I	3/4	25	34	18	2,95	0,15	2
1	76-81		5-E	4	25	34	18	2,95	0,15	2
1	81-86		6-E	4	25	34	18	2,95	0,15	2
1	86-91		7-E	4	25	34	18	2,95	0,15	2
1	91-96		8-E	4	25	34	18	2,95	0,15	2
1,5	31-36	AFG0629 15 1581	0-I	3	25	34	18	2,95	0,15	3
1,5	39-41		1-I	3	25	34	18	2,95	0,15	3
1,5	41-46		2-I	3	25	34	18	2,95	0,15	3
1,5	46-51		3-I	3	25	34	18	2,95	0,15	3
1,5	51-56		0-E / 4-I	3/4	25	34	18	2,95	0,15	3
1,5	56-61		1-E / 5-I	3/4	25	34	18	2,95	0,15	3
1,5	61-66		2-E / 6-I	3/4	25	34	18	2,95	0,15	3
1,5	66-71		3-E / 7-I	3/4	25	34	18	2,95	0,15	3
1,5	71-76		4-E / 8-I	3/4	25	34	18	2,95	0,15	3
1,5	76-81		5-E	4	25	34	18	2,95	0,15	3
1,5	81-86		6-E	4	25	34	18	2,95	0,15	3
1,5	86-91		7-E	4	25	34	18	2,95	0,15	3
1,5	91-96		8-E	4	25	34	18	2,95	0,15	3
2	31-36	AFG0629 20 1581	0-I	3	25	34	18	2,95	0,15	4
2	39-41		1-I	3	25	34	18	2,95	0,15	4
2	41-46		2-I	3	25	34	18	2,95	0,15	4
2	46-51		3-I	3	25	34	18	2,95	0,15	4
2	51-56		0-E / 4-I	3/4	25	34	18	2,95	0,15	4
2	56-61		1-E / 5-I	3/4	25	34	18	2,95	0,15	4
2	61-66		2-E / 6-I	3/4	25	34	18	2,95	0,15	4
2	66-71		3-E / 7-I	3/4	25	34	18	2,95	0,15	4
2	71-76		4-E / 8-I	3/4	25	34	18	2,95	0,15	4
2	76-81		5-E	4	25	34	18	2,95	0,15	4
2	81-86		6-E	4	25	34	18	2,95	0,15	4
2	86-91		7-E	4	25	34	18	2,95	0,15	4
2	91-96		8-E	4	25	34	18	2,95	0,15	4

* +0,2 mm complementary capacity achievable. ** Recommended values in bold.
Detailed description of the grooving tools, see page 520.

Selection chart: Grooving tool -against bore- for grooving with MPA, for EPB 760 heads (cont.)

Design 3

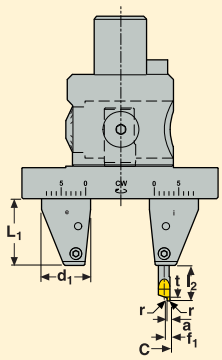

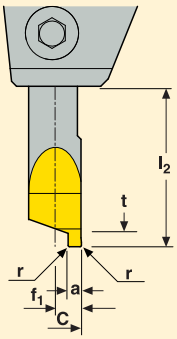

Design 4

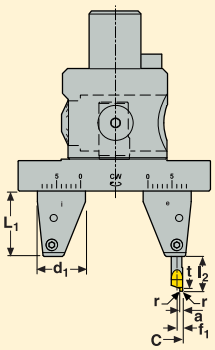

a	Capacity C ∅ mm*	against bore grooving tool Part No.	Grooving toolholder position**	Design	Dimensions in mm					Groove max depth t
					d_1	L_1	l_2	f_1	r	
2,5	31-36	AFG0629 25 1581	0-I	3	25	34	18	2,95	0,15	5
2,5	39-41		1-I	3	25	34	18	2,95	0,15	5
2,5	41-46		2-I	3	25	34	18	2,95	0,15	5
2,5	46-51		3-I	3	25	34	18	2,95	0,15	5
2,5	51-56		0-E / 4-I	3/4	25	34	18	2,95	0,15	5
2,5	56-61		1-E / 5-I	3/4	25	34	18	2,95	0,15	5
2,5	61-66		2-E / 6-I	3/4	25	34	18	2,95	0,15	5
2,5	66-71		3-E / 7-I	3/4	25	34	18	2,95	0,15	5
2,5	71-76		4-E / 8-I	3/4	25	34	18	2,95	0,15	5
2,5	76-81		5-E	4	25	34	18	2,95	0,15	5
2,5	81-86		6-E	4	25	34	18	2,95	0,15	5
2,5	86-91		7-E	4	25	34	18	2,95	0,15	5
2,5	91-96		8-E	4	25	34	18	2,95	0,15	5
3	31-36	AFG0629 30 1581	0-I	3	25	34	18	2,95	0,15	6
3	39-41		1-I	3	25	34	18	2,95	0,15	6
3	41-46		2-I	3	25	34	18	2,95	0,15	6
3	46-51		3-I	3	25	34	18	2,95	0,15	6
3	51-56		0-E / 4-I	3/4	25	34	18	2,95	0,15	6
3	56-61		1-E / 5-I	3/4	25	34	18	2,95	0,15	6
3	61-66		2-E / 6-I	3/4	25	34	18	2,95	0,15	6
3	66-71		3-E / 7-I	3/4	25	34	18	2,95	0,15	6
3	71-76		4-E / 8-I	3/4	25	34	18	2,95	0,15	6
3	76-81		5-E	4	25	34	18	2,95	0,15	6
3	81-86		6-E	4	25	34	18	2,95	0,15	6
3	86-91		7-E	4	25	34	18	2,95	0,15	6
3	91-96		8-E	4	25	34	18	2,95	0,15	6

* +0,2 mm complementary capacity achievable. ** Recommended values in bold.

Detailed description of the grooving tools, see page 520.

EPB 760 – Axiabore™ - Delivery content

	Part No.	Delivery content					Insert holder	Reduction bushes & key	KG
		Head	Boring bar						
			Tool	C ∅ mm	Material	l mm			
Nanobore™ Kit B cap. ∅ 0,3-8 mm (with all tools)	A760 01B	A760 01	A761 402	0,3-0,5	Solid carbide	1,2	–	935L01 *	0,725
			A761 412	0,5-1	Solid carbide	2	–	05A7600604 **	
			A761 422	1-2	Solid carbide	5	–	H2.0-2D ***	
			A761 432	2-3	Solid carbide	8	–	T06P-2 ***	
			A761 442	3-4,5	Solid carbide	10	–		
			A761 452	4,5-6	Solid carbide	15	–		
			A762 001	6-8	Steel	16	–		
			A762 201	6-8	Carbide	26	–		
Axiabore™ Kit A cap. ∅ 6 -20 mm	A760 02A	A760 02	A762 002	6-8	Steel	16	A765 R1	03M03C ***	1,200
			A763 002	8-10	Steel	22	A765 R2	T06P-2 ***	
			A765 002	10-13	Steel	30	A765 R3	T07P-2 ***	
			A760 S20	13-20	Steel, modular	40			
Axiabore™ Kit B cap. ∅ 2 -20 mm	A760 02B	A760 02	A761 432	2-3	Solid carbide	8	A765 R1	05A7601204 **	1,600
			A761 442	3-4,5	Solid carbide	10	A765 R2	03M03C ***	
			A761 452	4,5-6	Solid carbide	15	A765 R3	T06P-2 ***	
			A762 002	6-8	Steel	16		T07P-2 ***	
			A762 202	6-8	Carbide	27			
			A763 002	8-10	Steel	22			
			A763 202	8-10	Carbide	37			
			A765 002	10-13	Steel	30			
			A765 202	10-13	Carbide	55			
			A760 S20	13-20	Steel, modular	40			
			A760 E20	13-20	Carbide, modular	70			
Axialibrabore™ Kit A cap. ∅ 6-20 mm	A760 12A	A760 12	A762 002	6-8	Steel	16	A765 R1	03M03C ***	1,300
			A763 002	8-10	Steel	22	A765 R2	T06P-2 ***	
			A765 002	10-13	Steel	30	A765 R3	T07P-2 ***	
			A760 S20	13-20	Steel, modular	40			
Axialibrabore™ Kit B cap. ∅ 2-20 mm	A760 12B	A760 12	A761 432	2-3	Solid carbide	8	A765 R1	05A7601204 **	1,700
			A761 442	3-4,5	Solid carbide	10	A765 R2	03M03C ***	
			A761 452	4,5-6	Solid carbide	15	A765 R3	T06P-2 ***	
			A762 002	6-8	Steel	16		T07P-2 ***	
			A762 202	6-8	Carbide	27			
			A763 002	8-10	Steel	22			
			A763 202	8-10	Carbide	37			
			A765 002	10-13	Steel	30			
			A765 202	10-13	Carbide	55			
			A760 S20	13-20	Steel, modular	40			
			A760 E20	13-20	Carbide, modular	70			

All kits are delivered in a storage case. * Magnifying glass. ** Reduction bush. *** Key.
Please check availability in current price and stock-list.

EPB 760 – Axiabore™ - Delivery content

	Part No.	Delivery content					Insert holder	Reduction bushes & key	KG
		Head	Boring bar						
			Tool	C ∅ mm	Material	l mm			
Axiabore™ Plus - Kit A cap. ∅ 6-33 mm 	A760 03A	A760 03	A762 003	6-8	Steel	16	A765 R1	H04-4 ***	2,600
			A763 003	8-10	Steel	22	A765 R2	T06P-3 ***	
			A765 003	10-13	Steel	30	A765 R3	T07P-3 ***	
			A760 S30	13-18	Steel, modular	40	A765 R4	T15P-3 ***	
			A760 S31	18-33	Steel, modular	50	A765 R5		
							A765 R6		
Axiabore™ Plus - Kit B cap. ∅ 6-63 mm 	A760 03B	A760 03	A762 003	6-8	Steel	16	A765 R1	H04-4 ***	4,000
			A762 203	6-8	Carbide	27	A765 R2	T06P-3 ***	
			A763 003	8-10	Steel	22	A765 R3	T07P-3 ***	
			A763 203	8-10	Carbide	27	A765 R4	T15P-3 ***	
			A765 003	10-13	Steel	30	A765 R5		
			A765 203	10-13	Carbide	55	A765 R6		
			A760 S30	13-18	Steel, modular	40			
			A760 E30	13-18	Carbide, modular	70			
			A760 S31	18-33	Steel, modular	50			
			A760 E31	18-33	Carbide, modular	80			
			A760 A32	33-48	Aluminium, modular	60			
			A760 A33	48-63	Aluminium, modular	80			
Axialibrabore™ Plus - Kit A cap. ∅ 6 -33 mm 	A760 13A	A760 13	A762 003	6-8	Steel	16	A765 R1	H04-4***	2,900
			A763 003	8-10	Steel	22	A765 R2	T06P-3***	
			A765 003	10-13	Steel	30	A765 R3	T07P-3***	
			A760 S30	13-18	Steel, modular	40	A765 R4	T15P-3***	
			A760 S31	18-33	Steel, modular	50	A765 R5		
							A765 R6		
Axialibrabore™ Plus - Kit B cap. ∅ 6-63 mm 	A760 13B	A760 13	A762 003	6-8	Steel	16	A765 R1	H04-4 ***	4,300
			A762 203	6-8	Carbide	27	A765 R2	T06P-3 ***	
			A763 003	8-10	Steel	22	A765 R3	T07P-3 ***	
			A763 203	8-10	Carbide	37	A765 R4	T15P-3 ***	
			A765 003	10-13	Steel	30	A765 R5		
			A765 203	10-13	Carbide	55	A765 R6		
			A760 S30	13-18	Steel, modular	40			
			A760 E30	13-18	Carbide, modular	70			
			A760 S31	18-33	Steel, modular	50			
			A760 E31	18-33	Carbide, modular	80			
			A760 A32	33-48	Aluminium, modular	60			
			A760 A33	48-63	Aluminium, modular	80			
Face grooving & overturning tools Kit C 	A760 03C	-	BDA16 BS25100	-	MPA	-	A765 R1	T15P-3 ***	1,500
			BAS25 MH1660	-	Shank	-	A765 R2	T07P-2 ***	
			BAS25 CW1660	-	Counterweight	-		03HL05 ***	
			BAS25 FGI35	-	Grooving tool holder	-			
			BAS25 FGE35	-	Grooving tool holder	-			

All kits are delivered in a storage case. * Magnifying glass. ** Reduction bush. *** Key.
Please check availability in current price and stock-list.

Instructions
Tool fitting procedure

Note: with the exception of the smallest head Nanobore™, the Axiabore™ type heads have a 'cylinder & flange' tool fitting design, for superior tool rigidity.
The tool clamping screw orientates and secures the tool into the adjusting barrel. The clamping screw has a spring loaded plunger which is designed to pre-load the tool flange against the boring head face.
Once located and clamped, diameter adjustment can still be carried out.
All heads achieve cutting edge orientation according to ISO.

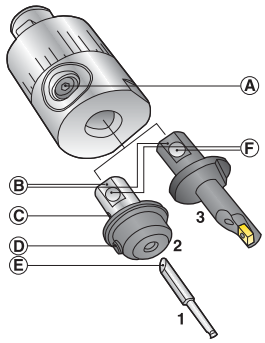

Tool fitting procedure
Boring tool, solid carbide (1):
Fit the carbide tool into the reduction bush. The angled back end (E) has to be pushed against the pin (C) for cutting edge orientation. The reduction bush's tool fixing screw (D) clamps onto the tool to lock the tool into the reduction bush. The tool fixing screw (A) clamps onto reduction bush's flat (B) to orientate and lock the reduction bush into the head body.

Boring bar, insert type (2):
Direct fitting, the screw (A) has to be locked onto the tool's flat (B): this also achieves ISO cutting edge orientation.

Boring bar, modular:
Select the suitable combination shank and insert holder on the selection chart page 516.
Assemble the bar with insert holder onto the head, see previous note.

Diameter setting procedure

Axiabore™ type heads have indirect barrel locking: the barrel locking screw action does not influence the set diameter.
1) Unlock the barrel locking screw (H), to allow the barrel with the tool to be moved for diameter adjustment.
2) Set the diameter using the micrometric adjusting screw (G).
3) Tighten locking screw (H), to lock the barrel in the set position.

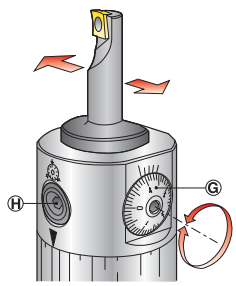

Adjustment precision
- Setting dial (G): 1 increment = 0,01 mm on diameter.
- Vernier fine adjustment (I): 2,5 μm resolution on diameter.
Clockwise adjustment = diameter increase (counterclockwise = diameter reduction).

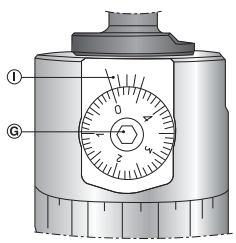

Note: Best component bore diameter precision is obtained by presetting the head (on a presetter) at a smaller diameter (e.g. -20 μm), running a test bore, and correcting to the required diameter.
Heads are designed for best setting reliability (for reaching the required diameter) by adjusting clockwise out to diameter.
Therefore for diameter reduction total setting reliability is obtained by a preliminary 1/2 to 1 rotation counterclockwise, then setting clockwise to the required diameter.

Instructions
Balancing procedure

The Axialibrabore™ (A760 12) and - Axialibrabore™ Plus - (A760 13) heads feature the LibraOne system: one balancing ring only, with direct ring reading, no chart needed.

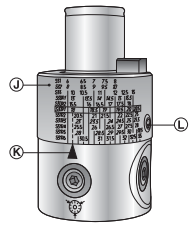

– Unlock head's balancing ring locking screw (L).
– Balancing is performed by setting the graduated balancing ring in line with the mark (K) on the body of the head (in accordance with the balancing code of the tool used, and the diameter to be bored):

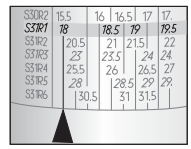

For solid carbide and indexable insert tools, the balancing code is engraved on the tool body.
For modular boring bars, the balancing code is a combination of the Part No. suffixes of the shank and of the insert holder (e.g. shank A760S31 + insert holder A765R5 = balancing code S31R5).
Boring heads balancing ring increments are 0,5 mm; set to the nearest value.
-Tighten the locking screw (L), to lock the ring in position.

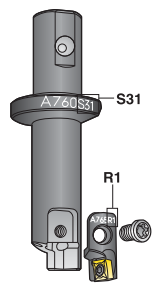

Note: If using 'Alu' bars or an MPA assembly with the - Axialibrabore™ Plus - head, fine balancing is not possible and the balancing ring has to be set to the following positions:
• MPA for boring: set to the boring symbol
• MPA for OD-overturning: set to the OD-overturning symbol
• MPA for grooving: set to the grooving symbol
• 'Alu' bar: set balancing ring according to shank's engraved balancing code (irrespective of fitted insert holder and setting diameter).
Balancing quality can be optimised using a balancing machine.

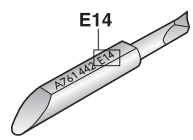

Instructions
MPA (multi-purpose adapter) assembly procedure

The - Axiabore™ Plus - head can be equipped with the MPA to perform boring (Fig.1), OD-overturning (Fig.2) and face grooving (Fig.6, see next page).
The MPA is delivered with 2 screws to enable the assembly of the component parts. The adapter and components have double serrated interfaces, for diametrically opposite orientation and diameter multi-positioning (increment 2,5 μm on diameter). The adapter features an adjustable nozzle to direct coolant towards the cutting edge.

Boring or OD-overturning
Both boring (Fig.1) and OD-overturning (Fig.2) assemblies use the same boring shank (2) equipped with an insert holder (5), and a counterweight (3).

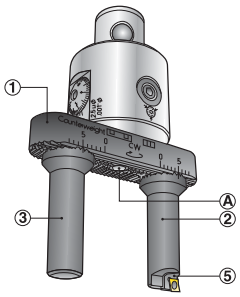

Fig. 1

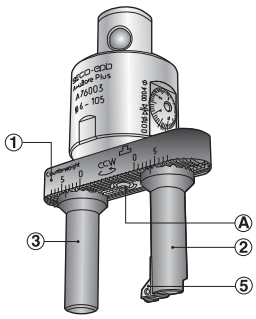

Fig. 2

MPA boring assembly (Fig.1)
Select the appropriate insert holder (5) to be assembled onto the shank (2), using the 'Selection chart: Insert holders for boring with MPA' (see Product page 521).
Position the MPA with shank uppermost and the boring and grooving symbols visible (Fig.3): lock the shank with insert holder on the right hand side of the MPA (its diameter position is shown in the 'Selection chart: Insert holders for boring with MPA' page 521) and lock the counterweight symmetrically on the left hand side (Fig.5, bottom).
Assemble the MPA onto the boring head and proceed to the fine diameter adjustment.
CAUTION: Boring requires clockwise spindle rotation, as indicated by the symbol.

MPA OD-overturning assembly (Fig.2)
Select the appropriate insert holder (5) to be assembled onto the shank (2), using the 'Selection chart: Insert holders for OD-overturning with MPA' (see Product page 522).
Position the MPA with shank uppermost and the OD-overturning symbol visible (Fig.4): lock the shank with insert holder on the right hand side of the MPA (its diameter position is shown in the 'Selection chart: Insert holders for OD-overturning with MPA' page 522) and lock the counterweight symmetrically on the left hand side (Fig.5, top).
Assemble the MPA onto the boring head and proceed to the fine diameter adjustment.
CAUTION: OD-overturning requires counter-clockwise spindle rotation, as indicated by the symbol.

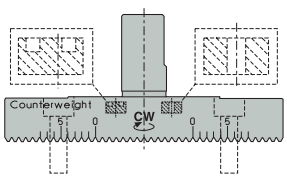

Fig. 3

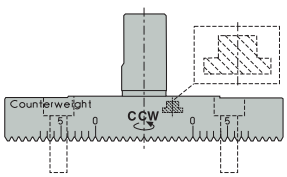

Fig. 4

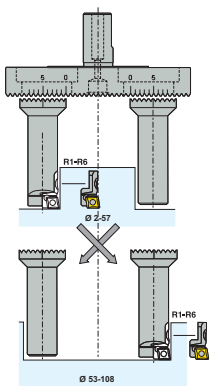

Fig. 5

Instructions
MPA (multi-purpose adapter) assembly procedure (cont:)

MPA grooving tool assembly (Fig.6)
A grooving assembly requires:

- a pair of grooving tool holders (one E='External' (7) and one I='Internal' (6)),
- one grooving tool 'against Spigot' (8) or 'against Bore' (9).

Both tool types can be mounted onto an 'E' or 'I' holder.

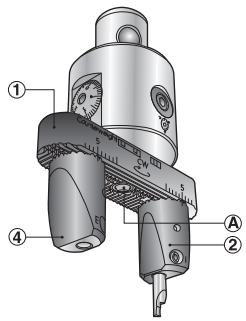

Fig. 6

Depending on the groove width and position (against spigot wall (8) / against bore (9)), select the appropriate grooving tool, using the selection charts: 'Grooving tool' (see pages 523-526). When there is no wall, both tool types are suitable.

Depending on the required diameter and workpiece accessibility, assemble the grooving tool into the tool holder 'I' or 'E' ('I' holder is shaped for inner tool position; 'E' for outer tool position).
Tool's angled back end (B) locates against the tool holder's pin (C) for cutting edge orientation.
Clamp the tool with screw (D).

Position the MPA with shank uppermost and the boring and grooving symbols visible (Fig.7): lock the tool holder with tool on the right hand side of the MPA (its diameter position is shown in the 'Selection charts: Grooving tool') and lock the toolholder without tool as a counterweight symmetrically on the left hand side.

Assemble the MPA onto the boring head and proceed to the fine diameter adjustment.

CAUTION: Grooving requires clockwise spindle rotation, as indicated by the symbol.

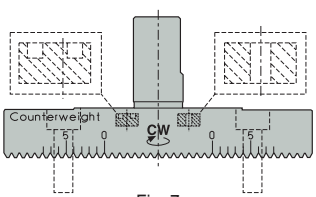

Fig. 7

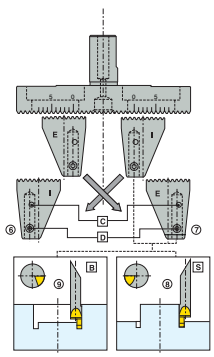

Fig. 8

Instructions
Maximum speeds for Axiabore™ type heads

Head	Capacity ∅ (mm)	Max. RPM with tool (RPM)	Max. RPM with MPA (RPM)	Max. cutting speed v_c at min. Cap. (m/min)	Max. cutting speed v_c at max. Cap. (m/min)
Axiabore™ type with Graflex® connection					
A76001	0,3 – 8	30000	-	28*	754*
A76002	2 – 20	12000	-	75*	754*
A76003	6 – 108	8000**	5000	151*	1000***
A76012	2 – 20	24000**	-	151*	1500***
A76013	6 – 33	20000**	5000	377*	1500***
Axiabore™ type with Seco-Capto™ connection					
C3-391.0760-02	2-20	12000	-	75*	754*
C5-391.0760-03	6-108	8000**	5000	151*	1000**

Note: The maximum speeds are related to the boring head's mechanical design and balancing quality. Speeds inside these limits have to be chosen in regard to the other machining conditions, e.g. workpiece material, cutting edge (tools and inserts), tooling length, machine spindle. At speeds from approx. 8000 RPM and above, the holding arbors and intermediates should be fine balanced. Using balanceable heads and fine balanced holders improves the tool life and the boring performances even at lower speeds.
* Implied max. cutting speed with max. RPM.
** Not reachable with all tools, see ***.
*** Max. cutting speed not to be exceeded.

Troubleshooting

Problem	Possible cause	Solution
Poor tool life	Wrong insert grade	Change to more wear resistant grade
	Excessive cutting speed	Reduce cutting speed
	Excessive DOC	Decrease DOC
Chatter & Vibrations	Excessive cutting speed	Reduce cutting speed
	High L/D ratio	Shorten tool to increase stiffness
		Use stronger boring tool
		Use carbide or heavy metal extensions
	Wrong insert	Reduce nose radius of insert
		Use ground geometry inserts
	Incorrect stock allowance	Change pre-hole diameter
Poor hole diameter tolerance & repeatability	Inaccurate tool changes	Worn and damaged tool shank: replace
		Clean spindle and tool shank
	Variation of stock allowance	Add semi-finishing boring step
	Low spindle stability	Use sharper ground geometry inserts
Poor roundness	Excessive boring tool imbalance	Check the spindle runout
		Change to LIBRAFLEX® boring head
		Check balance ring setting
		Reduce speed
	Excessive cutting forces	Check stock allowance and feed rate
	Insufficient workpiece clamping	Check for uniform workpiece clamping
	Workpiece non-symmetrical	Reduce cutting forces, change to ground insert
		Increase cutting speed, reduce feed
Poor positional tolerance	Original bore misaligned	Add a semi-finishing boring step
	Excessive DOC	Decrease DOC, make two passes
Poor surface finish	Wrong insert radius	Use larger insert radius
	Excessive feed rate	Reduce feed to be max. 30% of insert nose radius
	Poor chip evacuation	Apply through coolant
		Change insert to higher rake angle (HSS: please enquire)
		Check DOC
Tapered bore	Premature	Change to more wear resistant grade
		Modify cutting speed
		Increase coolant flow

Troubleshooting advice is also valid for the fine boring heads, radial type.

EPB 780 – Axial fine boring kit, capacity 10-32 mm, Graflex®



Simple and flexible: 1 Graflex® fine boring head with only 3 tools, covering a large boring capacity from ∅ 10 to 32 mm.
Precise micrometric adjusting: increment 0,01 mm and vernier 2.5 μm, on the diameter.
Boring head is dust proof and lubricated for life.
One insert size (CC...0602...) suits all boring bars.
Coolant through directed towards cutting edge.
Delivered in a protective case.
Cutting edge orientation according to ISO.

Instructions

Tool fitting procedure

The tool clamping screw (2) orientates and secures the tool into the adjusting barrel.
Head design and locking flat on the boring bar's shank achieves a cutting edge orientation according to ISO.
Once located and clamped, diameter adjustment can be carried out.

Diameter setting procedure

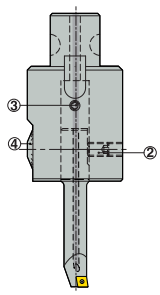

The boring head has indirect barrel locking: the barrel locking screw action does not influence the set diameter.
1) Unlock the barrel locking screw (3), to allow the barrel with the tool to be moved for diameter adjustment.
2) Set the diameter using the micrometric adjusting screw (4).
3) Tighten locking screw (3), to lock the barrel in the set position.

Adjustment precision

- Setting dial (G): 1 increment = 0,01 mm on diameter.
- Vernier fine adjustment (I): 2,5 μm resolution on diameter.

Clockwise adjustment = diameter increase (counterclockwise = diameter reduction).
Note: Best component bore diameter precision is obtained by presetting the head (on a presetter) at a smaller diameter (e.g. -20 μm), running a test bore, and correcting to the required diameter.
Head is designed for best setting reliability (for reaching the required diameter) by adjusting clockwise out to diameter. Therefore for diameter reduction total setting reliability is obtained by a preliminary 1/2 to 1 rotation counterclockwise, then setting clockwise to the required diameter.

Maximum speeds for boring heads and boring bars

Head	Capacity ∅ (mm)	Max. RPM (RPM)	Max cutting speed v_c (m/min)
Axial fine boring kit			
A78000B	10 - 32	8000*	-
A78502	10-13,5	-	250
	13,5-17	-	175
A78504	16,5-20,5	-	250
	20,5-24,5	-	175
A78506	24-28	-	250
	28-32	-	175

Note: The maximum speeds are related to the boring head's mechanical design and balancing quality. Speeds inside these limits have to be chosen in regard to the other machining conditions, e.g. boring bar, workpiece material, tooling length, machine spindle.
* This maximum speed will not be exceeded when respecting the max. V_c of the kit's boring bars, see table.

Troubleshooting

Please refer to troubleshooting advice, in current Holemaking catalogue, chapter Axiabore™.

EPB 780 – Axial fine boring kit, capacity 10-32 mm, Graflex®



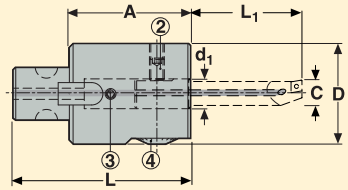

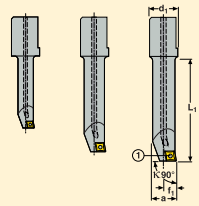

- Simple and flexible: 1 fine boring head with only 3 tools, covering a large boring capacity from ∅ 10 to 32 mm.
- Precise micrometric adjusting: increment 0,01 mm and vernier 2.5 µm, on the diameter.
- Boring head is dust proof and lubricated for life.
- One insert size suits all boring bars.
- Coolant through directed towards cutting edge.
- Delivered in a protective case.

Note: for other fine boring applications, see the Axiabore (0,3 to 108 mm) and radial type (15 to 205 mm) fine boring heads.

Fine boring kit

Kit Part No.	Kit capacity ∅ C mm	Head features and weight							Case dimensions	KG
		A (mm)	D (mm)	d (size / mm)	d_1 (mm)	L (mm)	Max. Rpm*	Head (Kg)	WxDxH (mm)	
A780 00B	10-32	65	54	Graflex G5/ 28	16	95	8000	1,30	291x252x100	2,10

Kit delivery content: 1 boring head, 3 boring bars, 2 keys for head and insert screw, operating instructions, protective case.
* This maximum speed must not be exceeded when respecting the max. V_c of the kit's boring bars, see below.

Fine boring kit - boring bars' features and maximum speeds for head with boring bar fitted

Part No.	Capacity & dimensions						Maximum speeds		KG
	∅ C (mm)	L (mm)	f_1 (mm) -with gauge insert r = 0,4 mm	a (mm)	d_1 (mm)	Suitable insert size	When capacity (mm)	v_c max. (m/min)	
A785 02	10-32	40	5,00	9,5	16	CC..0602	10-13,5	250	0,20
							13,5-17	175	
A785 04	16,5-24,5	65	8,75	16	16	CC..0602	16,5-20,5	250	0,30
							20,5-24,5	175	
A785 06	24-32	70	12,5	20,25	16	CC..0602	24-28	250	0,40
							28-32	175	

Spare parts

For kit	Boring bars	Insert locking screw (1)	Torx driver for insert locking screw	Boring bar fixing screw (2)	Barrel locking screw (3)	Key for head setting (2) (3) (4)	
							
							S
A78000B	A785 02	C02504-T07P	T07P-3	950A0812	AU7901100	H04-4	4
	A785 04						
	A785 06						



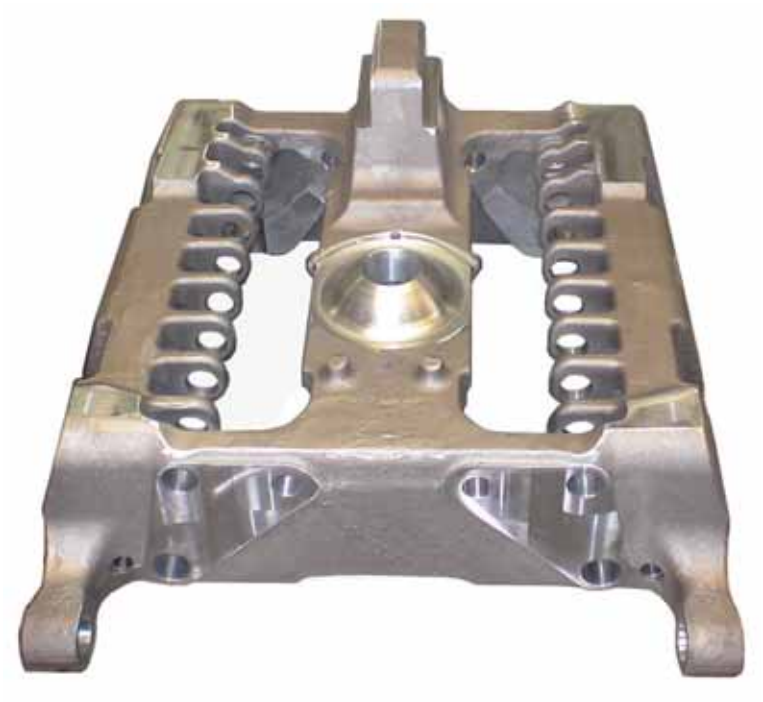

Fine boring heads – Overview

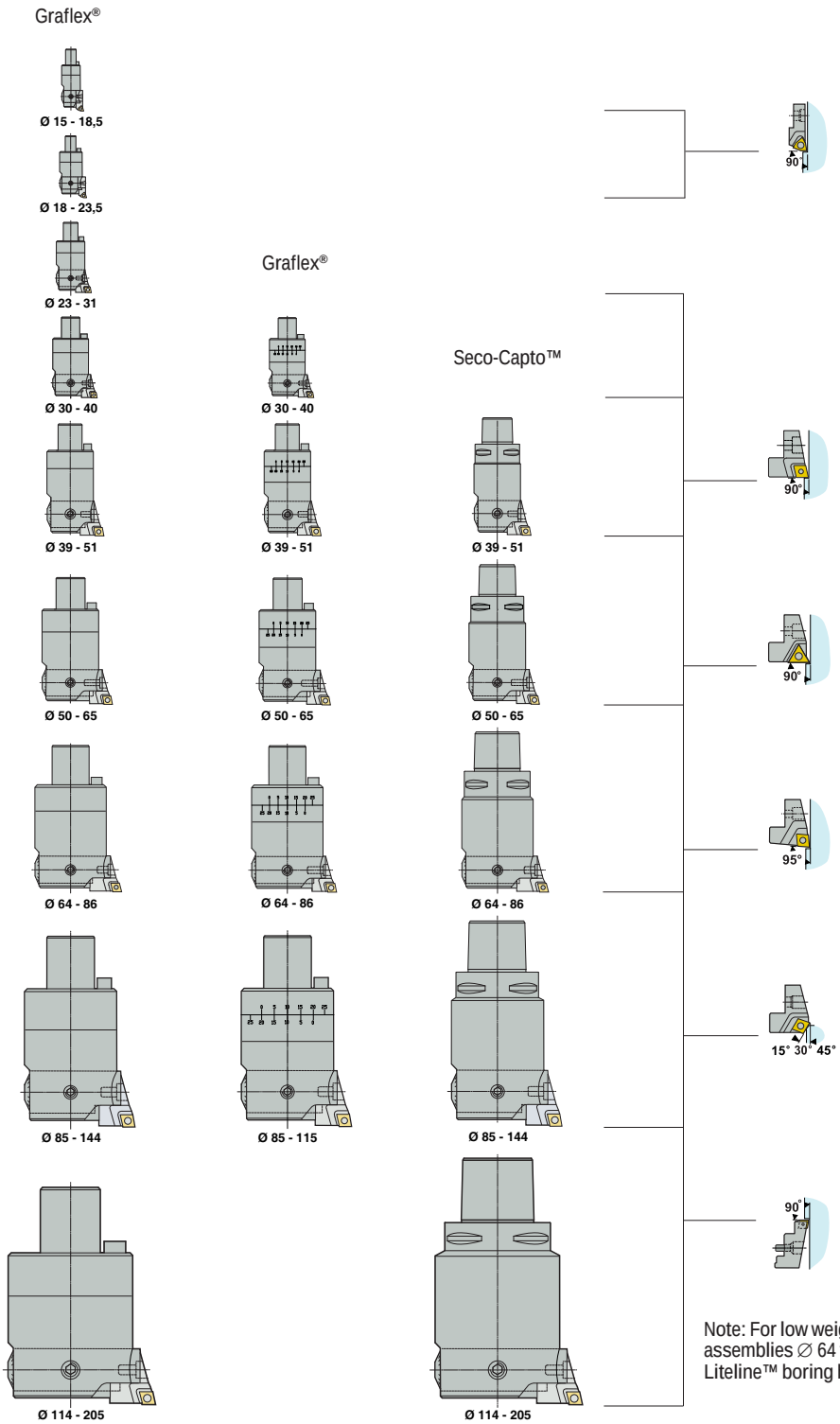

Note: For low weight fine boring assemblies ∅ 64 to 205 mm, see the Liteline™ boring heads chapter.

Features

Fine boring heads, radial types

9 fine boring heads EPB 780 radial with Graflex® connection for fine boring ∅ 15 to 205 mm

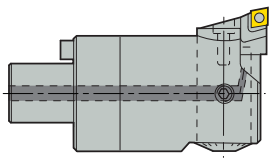

5 fine boring heads EPB 780 radial with Seco-Capto™ connection for fine boring ∅ 39 to 205 mm

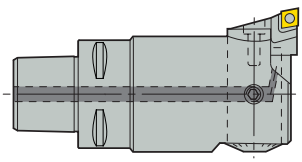

Seco-Capto™ direct: ∅ 39 to 205 mm

Note: The minimum bore size of the smallest Seco-Capto™ fine boring head is ∅39 mm with the smallest available Seco-Capto™ C3 connection. For ∅ 15 to 40 mm use Graflex® boring heads with connection sizes G0 to G2 in conjunction with the appropriate Seco-Capto™/Graflex® adaptor. This offers also boring length modularity when using additional Graflex® extensions.

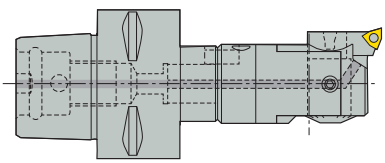

Seco-Capto™ adapter and Graflex® head: ∅ 15 to 40 mm

Note: Features, Instructions (insert holder fitting, diameter setting, back boring instructions, troubleshooting, recommended machining conditions, maximum speeds), suitable insert holders and suitable inserts are similar for both types of EPB 780 fine boring heads of similar boring capacity size, regardless of connection type.

Features
Fine boring heads, radial types

A radial type fine boring head is an assembly of a body (head) and an insert holder.

EPB 780 heads

9 precision boring heads with Graflex® connection for fine boring ∅ 15 to 205 mm, using radially fitted insert holders.
Pre-balanced on median diameter setting.
5 precision boring heads with Seco-Capto™ connection for fine boring Ø 39 to 205 mm.

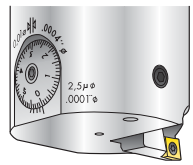

Micrometric adjustment
Insert holder setting mechanism with a micrometric adjusting screw (1 increment = 0,01 mm on the diameter) and a vernier scale (resolution of 2,5 µm on the diameter).
The precision of the mechanism guarantees repeatable accuracy.
Angular orientation of the cutting edge according to DIN 69871/ISO 7388 for SA and ISO 12164 for HSK. Coolant through the head directed towards the cutting edge.

EPB 790 heads

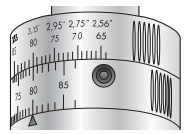

5 balanceable 'Libraflex®' boring heads for fine boring ∅ 30 to 115 mm, at high speeds (up to 1500 m/min), using radially fitted insert holders.
Balancing reduces spindle stress, cutting parameters can be optimised, better machining qualities are achieved even at conventional speeds.
Balancing is performed by setting both graduated rings in accordance with the diameter to be bored.
No chart needed.

Insert holders

The wide range of fine boring, chamfering and back boring insert holders are suitable for both EPB 780 and EPB 790 fine boring heads, radial types.

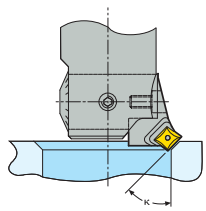

Fine boring insert holders

EPB 782: lead angle 90° for WB inserts
EPB 724: lead angle 90° for TC inserts
EPB 725: lead angle 90° for CC inserts
EPB 726: lead angle 95° for CC inserts
Note: 95° lead angle insert holders should be used to avoid face contact when boring up a shoulder.

Chamfering insert holders, ∅ 23 to 160 mm
EPB 729: available with a 15°, 30° or 45° lead angle for CC inserts.
Libraflex® balancing can also be achieved when using chamfering insert holders.

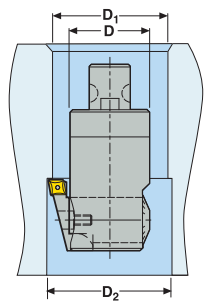

Back-boring insert holders, ∅ 26,5 to 164 mm
EPB A789: lead angle 90° for WB and CC inserts..
Libraflex® balancing is not possible when using back-boring insert holders. In this case, the highest unbalance reduction is obtained when both balancing rings are set on their largest graduation.
For D1 minimum access bore checking, see page 547.

Fine boring heads, radial type

EPB 780 – Fine boring heads, radial type

Graflex®



- With micrometric adjusting (increment 0,01 mm and vernier 2,5 µm, on the diameter)

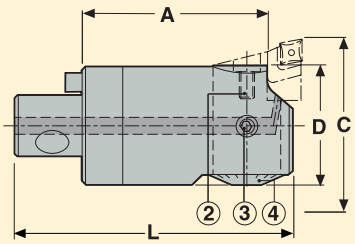

2. Clamp screw
3. Locking screw
4. Micrometric adjusting screw

Graflex size	Capacity C ∅ mm	Part No.	Dimensions in mm			Insert holder size	* KG
			A	D	L		
G0	15-18.5	A78008	27,5	14	44	09	0,04
G0	18-23.5	A78009	27,5	17	44	09	0,06
G1	23-31	A78010	32,5	21,5	51,5	10	0,11
G2	30-40	A78020	37,5	27	59,5	20	0,22
G3	39-51	A78030	54,5	35	82	30	0,46
G4	50-65	A78040	61,5	43	93	40	0,8
G5	64-86	A78050	71,5	54	109	50	1,49
G6	85-144	A78060	88,5	70	140	60/65	3,04
G7	114-205	A78070	98,5	95	160	70/75	6,3

Insert holders have to be ordered separately, see pages 544-546.

*Without insert holder

Spare parts

For	Locking screw	Key	Clamp screw
A780 08	19A7100403	H2.0-2D	960D30050S
A780 09	19A71000	H2.0-2D	LBHF0306R
A780 10	19A71000	H2.0-2D	19TB0305
A780 20	950L0406	H2.0-2D	19TB0305
A780 30	950L0608	03M03C	19TB04075
A780 40	950L0612	03M03C	19TB04075
A780 50	950L0616	03M03C	950D0410
A780 60	950L1016	H05-4	950D0612
A780 70	950L1030	H05-4	950D0616

Please check availability in current price and stock-list.

EPB 780 – Fine boring heads, radial type

Seco-Capto™



- With micrometric adjusting (increment 0,01 mm and vernier 2,5 µm, on the diameter)

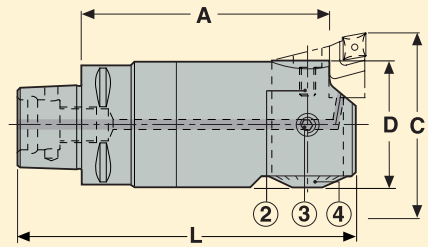

2. Clamp screw
3. Locking screw
4. Micrometrc adjusting screw

Seco-Capto size	Capacity C ∅ mm	Part No.	Dimensions in mm A	D	L	Insert holder size	* KG
C3	39-51	C3-391.0780-30	59,5	35	86	30	0,48
C4	50-65	C4-391.0780-40	71,5	43	103	40	0,89
C5	64-86	C5-391.0780-50	81,5	54	119	50	1,62
C6	85-144	C6-391.0780-60	100,5	70	150	60	3,3
C8	114-205	C8-391.0780-70	121,5	95	181	70	7,15

Insert holders have to be ordered separately, see pages 544-546.

*Without insert holder

Spare parts

For	Locking screw	Key	Clamp screw
C3-391.0780-30	950L0608	03M03C	19TB04075
C4-391.0780-40	950L0612	03M03C	19TB04075
C5-391.0780-50	950L0616	03M03C	950D0410
C6-391.0780-60	950L0616	H05-4	950D0612
C8-391.0780-70	950L1030	H05-4	950D0616

Please check availability in current price and stock-list.

EPB 790 – Libraflex® balanceable fine boring heads, radial type

Graflex®



- With micrometric adjusting (increment 0,01 mm and vernier 2,5 µm, on the diameter)
- Balancing by setting both rings in accordance with the diameter to be bored
- For speeds v_c up to 1 495 m/min and more, see page 548

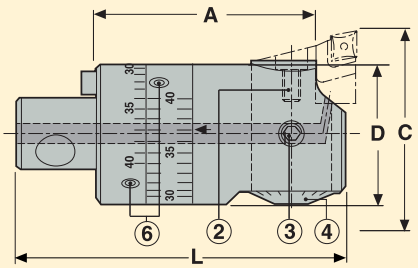

2. Clamp screw
3. Locking screw
4. Micrometric adjusting screw
6. Locking screw 2

Graflex size	Capacity C ∅ mm	Part No.	Dimensions in mm A	D	L	Insert holder size	KG*
G2	30-40	A79020	37,5	27	59,5	20	0,19
G3	39-51	A79030	54,5	35	82	30	0,45
G4	50-65	A79040	61,5	43	93	40	0,78
G5	64-86	A79050	71,5	54	109	50	1,42
G6	85-115	A79060	88,5	70	140	60	2,87

Insert holders have to be ordered separately, see pages 544-546.

*Without insert holder

Spare parts

For head	Locking screw 2	Locking screw	Key	Clamp screw
A790 20	960D30045S	950L0406	H2.0-2D	19TB0305
A790 30	AU7901030	950L0608	03M03C	19TB04075
A790 40	AU7901040	950L0612	03M03C	19TB04075
A790 50	AU7901050	950L0616	03M03C	950D0410
A790 60	AU7901060	950L1016	H05-4	950D0612

Please check availability in current price and stock-list.

Fine boring heads, radial type

Fine boring insert holders 90° and 95°, for radial type heads EPB 780 and EPB 790



- For fitting onto EPB 780 and EPB 790 radial type heads

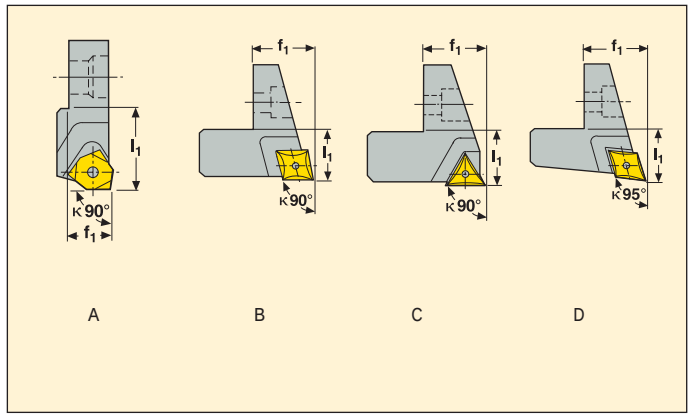

Insert holders type	For head	*	**	Insert holder size	Capacity ∅ mm	Part No.	Dimensions in mm l_1	Dimensions in mm f_1	Suitable insert size	Design	KG
90° for WB inserts	EPB 78008 / EPB 78009			09	15-23.5	A78209	7,2	4	WB...0301...	A	0,01
90° for CC inserts	EPB 78010			10	23-31	A72510	10,3	4,5	CC...0602...	B	0,01
	EPB 78020 / EPB 79020			20	30-40	A72520	8,3	5	CC...0602...	B	0,02
	EPB 78030 / EPB 79030			30	39-51	A72530	10,3	8	CC...0602...	B	0,02
	EPB 78040 / EPB 79040			40	50-65	A72540	10,3	9,5	CC...0602...	B	0,02
	EPB 78050 / EPB 79050	*		50	64-86	A72550	10,3	12,5	CC...0602...	B	0,02
	EPB 78060 / EPB 79060	*		60	85-115	A72560	16,5	18,9	CC...09T3...	B	0,08
	EPB 78060 / EPB 79060	*	**	65	114-144	A72565	16,5	33,7	CC...09T3...	B	0,09
	EPB 78070 / EPB 79070			70	114-160	A72570	16,5	18,9	CC...09T3...	B	0,09
	EPB 78070 / EPB 79070			75	159-205	A72575	16,5	41,7	CC...09T3...	B	0,12
90° for TC inserts	EPB 78030 / EPB 79030			30	39-51	A72430	10,3	7,9	TC...1102...	C	0,01
	EPB 78040 / EPB 79040			40	50-65	A72440	10,3	9,4	TC...1102...	C	0,02
	EPB 78050 / EPB 79050			50	64-86	A72450	10,3	12,4	TC...1102...	C	0,02
	EPB 78060 / EPB 79060	*		60	85-115	A72460	16,3	18,9	TC...1102...	C	0,08
	EPB 78060 / EPB 79060	*	**	65	114-144	A72465	16,5	33,7	TC...1102...	C	0,09
	EPB 78070 / EPB 79070			70	114-160	A72470	16,3	18,9	TC...1102...	C	0,1
	EPB 78070 / EPB 79070			75	159-205	A72475	16,5	41,7	TC...1102...	C	0,13
95° for CC inserts	EPB 78010			10	23-31	A72610	10,3	4,5	CC...0602...	D	0,01
	EPB 78020 / EPB 79020			20	30-40	A72620	8,3	5	CC...0602...	D	0,01
	EPB 78030 / EPB 79030			30	39-51	A72630	10,3	8	CC...0602...	D	0,01
	EPB 78040 / EPB 79040			40	50-65	A72640	10,3	9,5	CC...0602...	D	0,02
	EPB 78050 / EPB 79050			50	64-86	A72650	10,3	12,5	CC...0602...	D	0,02
	EPB 78060 / EPB 79060	*		60	85-115	A72660	16,5	18,9	CC...09T3...	D	0,07
	EPB 78060 / EPB 79060	*	**	65	114-144	A72665	16,5	33,7	CC...09T3...	D	0,09
	EPB 78070 / EPB 79070			70	114-160	A72670	16,5	18,9	CC...09T3...	D	0,09
	EPB 78070 / EPB 79070			75	159-205	A72675	16,5	41,7	CC...09T3...	D	0,12

Please check availability in current price and stock-list.
* The insert holders size 60 and 65 also fit onto the fine boring block for Bridge bar boring heads.
** The precision balancing of EPB A790 heads is not possible when using the large insert holders. For insert fixing spare screws and torx keys, see page 598.

Chamfering insert holders, for radial type heads EPB 780 and EPB 790



- For fitting onto EPB 780 and EPB 790 radial heads.

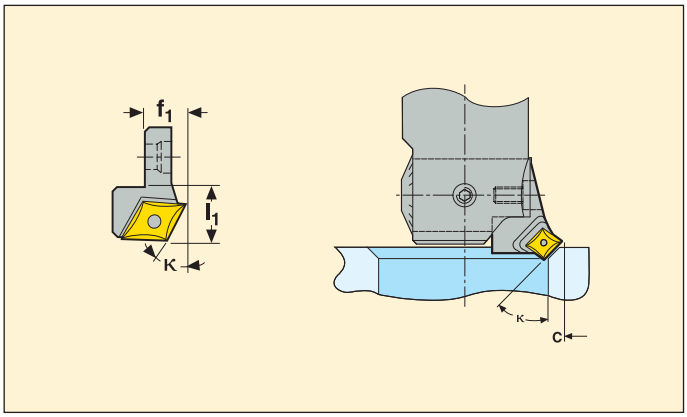

κ°	For head	Insert holder size	Capacity C ∅ mm-	Part No.	Dimensions in mm l_1	Dimensions in mm f_1	Suitable insert size	KG
30°	EPB 78010	10	23-31	A72910CC0630	10,8	4,5	CC...0602...	0,01
	EPB 78020 / EPB 79020	20	30-40	A72920CC0630	10	4,9	CC...0602...	0,01
	EPB 78030 / EPB 79030	30	39-51	A72930CC0630	10,5	8,1	CC...0602...	0,01
	EPB 78040 / EPB 79040	40	50-65	A72940CC0630	10,5	9,5	CC...0602...	0,02
	EPB 78050 / EPB 79050	50	64-86	A72950CC0630	10,5	12,5	CC...0602...	0,02
	EPB 78060 / EPB 79060	60	85-115	A72960CC0930	16,5	19,1	CC...09T3...	0,08
	EPB 78070 / EPB 79070	70	114-160	A72970CC0930	16,4	18,8	CC...09T3...	0,09
45°	EPB 78010	10	23-31	A72910CC0645	11,5	4,5	CC...0602...	0,01
	EPB 78020 / EPB 79020	20	30-40	A72920CC0645	10	5	CC...0602...	0,01
	EPB 78030 / EPB 79030	30	39-51	A72930CC0645	10,5	8,1	CC...0602...	0,01
	EPB 78040 / EPB 79040	40	50-65	A72940CC0645	10,5	9,5	CC...0602...	0,02
	EPB 78050 / EPB 79050	50	64-86	A72950CC0645	10,3	12,4	CC...0602...	0,02
	EPB 78060 / EPB 79060	60	85-115	A72960CC0945	16,5	19,1	CC...09T3...	0,07
	EPB 78070 / EPB 79070	70	114-160	A72970CC0945	16,4	18,8	CC...09T3...	0,09

Please check availability in current price and stock-list.
For insert fixing spare screws and torx keys, see page 598.

Chamfering insert holders, for radial type heads EPB 780 and EPB 790



- For fitting onto EPB 780 and EPB 790 radial heads
- The precision balancing of EPB 790 heads is not possible when using back-boring insert holders

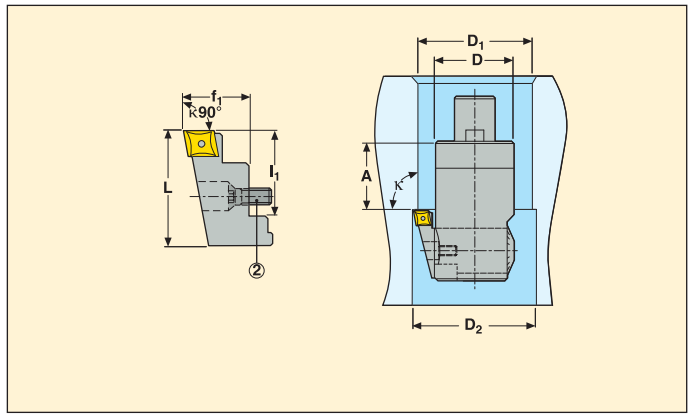

For head	Back-boring capacity D2 Ø mm	κ°	Part No.	Dimensions in mm A	D	L	l_1	f_1	Suitable insert size	KG
EPB 78010 //EPB 78020 & EPB 79020	39.5-47.5 // 46-56	90	A789X10CC0690	16.5 // 21.5	21.5 // 27	22	16	12,8	CC...0602...	0,01
EPB 78030 & EPB 79030 // EPB 78040 & EPB 79040 // EPB 78050 & EPB 79050	53-65 // 61-76 // 69-91	90	A789X30CC0690	32 // 39 // 49	35 // 43 // 54	30	23	15	CC...0602...	0,03
EPB 78060 & EPB 79060	89-119	90	A789X60CC0690	50	70	50	38,5	21	CC...0602...	0,09
EPB 78070	118-164	90	A789X70CC0690	60	95	50	38,5	21	CC...0602...	0,1

For the minimum access diameter D1 mini calculation, see page 547. * Back-boring capacity D2 Ø mm related to the head.

Spare parts

For	Clamp screw
A789X10CC06 90	950F0308
A789X30CC06 90	950F0410
A789X60CC06 90	950F0620
A789X70CC06 90	950F0620

Please check availability in current price and stock-list.
For insert fixing spare screws and torx keys, see page 598.

Instructions

Insert holder fitting procedure

Remove the fixing screw
Make sure the barrel locking screw is unlocked, to slightly free the insert holder's housing barrel (10).
Fit the insert holder (9) onto the barrel (10).
Fasten screw (2).
Fit an insert (15) with screw (12).

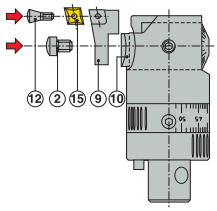

Diameter setting procedure

- Unlock the barrel locking screw (3).
- Set the diameter by the micrometric adjusting screw R, using the dial and vernier.
- Tighten screw (3) to lock the barrel in set position.

Adjustment precision (Fig. 2)
-Setting dial (R): 1 increment = 0,01 mm on diameter.
-Vernier fine adjustment (V): 2,5 μm resolution on diameter.
Clockwise adjustment = diameter increase (counterclockwise = diameter reduction).

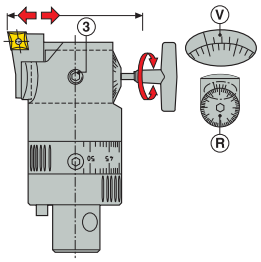

Note: Best component bore diameter precision is obtained by presetting the head (on a presetter) at a smaller diameter (e.g. -20 μm), running a test bore, and correcting to the required diameter. Heads are designed for best setting reliability (for reaching the required diameter) by adjusting clockwise out to diameter. Therefore for diameter reduction total setting reliability is obtained by a preliminary 1/2 to 1 rotation counterclockwise, then setting clockwise to the required diameter.

Balancing procedure, EPB 790 heads

When the diameter of the head is set, the two balancing rings (7) and (8) have to be adjusted, so that their graduation markings (corresponding to the diameter value) are in line with the reference mark (12) (increment on rings is 1 mm; set to the nearest value).
Lock both ring screws (5) and (6), in order to lock the rings in the set positions.

Note: Libraflex® balancing can also be achieved when using chamfering insert holders.
Libraflex® precision balancing is not possible when using back-boring insert holders. In this case, the highest unbalance reduction is obtained when both balancing rings are set on their largest graduation markings.

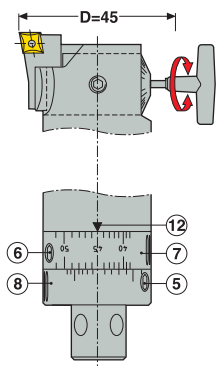

Back-boring instructions

When using back-boring insert holders, please note the minimum access diameter (D_1 min)* and the counterclockwise cutting action required.
The back boring insert holders are delivered with a screw to fix them on the head; this has to replace the standard screw already fitted on the head.

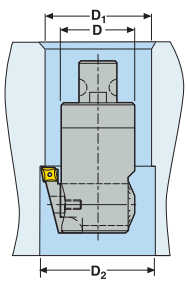

* For head sizes 08, 09 and 10: D_1 min $= \frac{D_2 + D}{2} + 0,5$

* For head sizes 20 to 70: D_1 min $= \frac{D_2 + D}{2} + 1$

Recommended machining conditions

Best performances are obtained with through coolant (higher machining data, better surface, better chip evacuation).
Always select the shortest tooling assembly possible, for best reliability and productivity: longer tools = lower speed.
For high performances (e.g. over 6000 RPM), we recommend the balanceable heads: balanceable heads improve the geometrical hole quality also at lower speeds e.g. 4000 RPM.
The five smallest heads covering ∅ 15 to 51 mm, when mounted onto carbide extensions, enable high performance fine boring, also in extremely long reach applications.

Troubleshooting

Please refer to fine boring troubleshooting advice, in chapter Axiabore™, page 534.

Maximum speeds for fine boring heads, radial type

Below max. RPM are for boring heads equipped with boring insert holders or chamfering insert holders. When using back boring insert holders on holders on EPB 790 or EPB 780 heads type heads, use max. rpm for A780.. type, similar size.

Head	Capacity ∅ mm	Max. RPM (RPM)	Implied max. cutting speed v_c at min. Cap. (m/min)	Implied max. cutting speed v_c at max. Cap. (m/min)
Libraflex® balanceable fine boring heads				
A79020	30 - 40	16000	1508	2011
A79030	39 - 51	12250	1501	1963
A79040	50 - 65	10000	1571	2042
A79050	64 - 86	7500	1508	2026
A79060	85 - 115	5600	1495	2023
Fine boring heads, with Graflex® connection				
A78008	15 - 18,5	16000	754	930
A78009	18 - 23,5	13000	735	960
A78010	23 - 31	10000	723	974
A78020	30 - 40	8000	754	1005
A78030	39 - 51	6000	735	961
A78040	50 - 65	5000	785	1021
A78050	64 - 86	3700	744	1000
A78060	85 - 115	2700	721	975
	114 - 144	2200	788	995
A78070	114 - 160	2000	716	1005
	159 - 205	1600	799	1030
Fine boring heads with Seco-Capto™ connection				
C3-391.0780-30	39-51	6000	735	961
C4-391.0780-40	50-65	5000	785	1021
C5-391.0780-50	64-86	3700	744	1000
C6-391.0780-60	85-115	2700	721	975
	114-144	2200	788	995
C8-391.0780-70	114-160	2000	716	1005
	159-205	1600	799	1030

Note: The maximum speeds are related to the boring head's mechanical design and balancing quality. Speeds inside these limits have to be chosen in regard to the other machining conditions, e.g. workpiece material, cutting edge (insert), tooling length, machine spindle. At speeds from approx. 8000 RPM and above, the holding arbors and intermediates should be fine balanced. Using balanceable heads and fine balanced holders improves the tool life and the boring performances even at lower speeds.



Overview

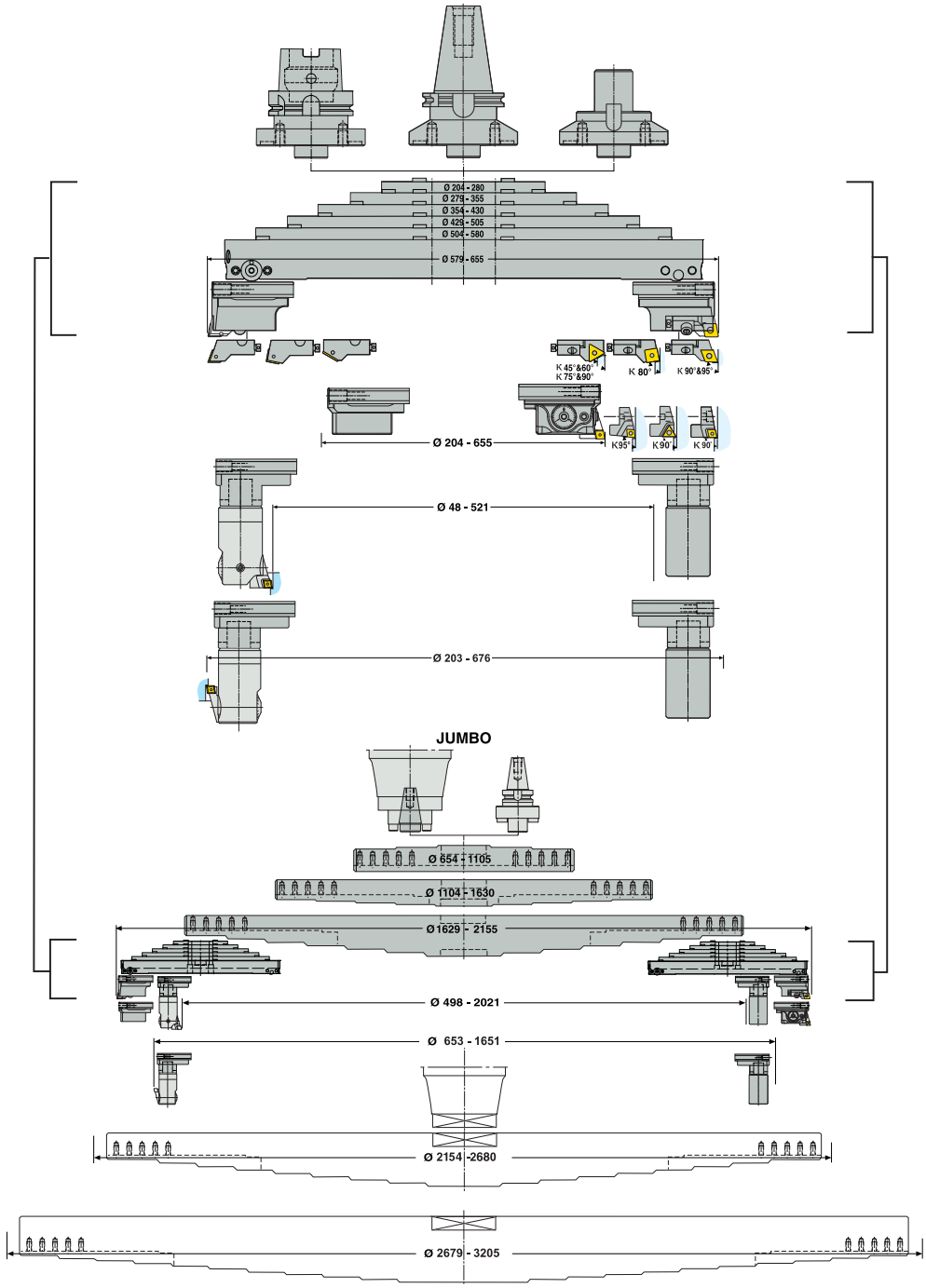
Ø 204 - 280
Ø 279 - 355
Ø 354 - 430
Ø 429 - 505
Ø 504 - 580
Ø 579 - 655
K 45°&60°
K 75°&90°
K 80°
K 90°&95°
K95°
K 90°
K 90°
Ø 204 - 655
Ø 48 - 521
Ø 203 - 676
JUMBO
Ø 654 - 1105
Ø 1104 - 1630
Ø 1629 - 2155
Ø 498 - 2021
Ø 653 - 1651
Ø 2154 -2680
Ø 2679 - 3205



Bridge bar boring heads

Features

5 Jumbo Bridge bars for boring ∅ 654 to 3205 mm (also OD-overturning ∅ 498 to 3071 mm and back-boring ∅ 653 to 3226 mm).

Jumbo Bridge bars made of high tensile aluminium with spindle steel interfaces, are designed to hold two classic Bridge bars in several positions.
Sizes A731S001, 002, 003 are delivered with 4 locking screws to be fitted onto a milling cutter holder, flange mounting Type 569, spigot ∅ 60 mm - or to be fitted directly onto the machine spindle (DIN 2079/50 front end), using the centering spigot shown in accessories.
Jumbo Bridge bars are delivered with two lifting rings.

Sizes A731S004-...* and A731S005-...* are available on request, with standard or specific spindle fitting possibilities, according to the machine:

Capacity C ∅ mm	Part No.	Dimensions in mm (see drawing on Product page)							KG
		d_1	A	l	l_1	l_2	L_1	D_1	
2154-2680	A731S004-...*	*	70	300	160	*	2140	*	*
2679-3205	A731S005-...*	*	110	400	200	*	2665	*	*

* designation code and dimensions will be completed related to the spindle fitting type.

Main new features

The new Jumbo Bridge bars 'S' feature through coolant channels to feed the coolant from the holder or the flange mount towards the two standard Bridge bars, and have a complementary locking screw of the standard Bridge bars.

Note: These new Jumbo Bridge bars 'S' can hold all classic Bridge bars (the new 'S', or the previous ones): when using the previous ones, the complementary clamping screw cannot be used. Through coolant to the cutting edge is only possible when using 'S' Jumbo Bridge bars and 'S' standard Bridge bars.

In order to keep balance, do not mix new and previous standard Bridge Bars and blocks on the same Jumbo Bridge bar.

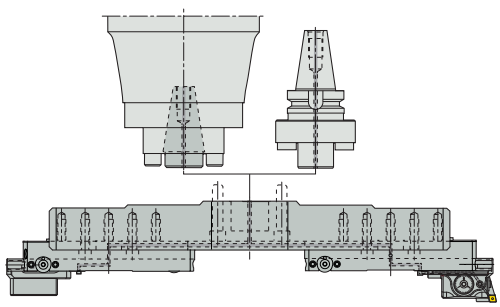

Features

6 Bridge bars for boring ∅ 204 to 655 mm (also OD-overturning ∅ 48 to 521 mm and back-boring)

Bridge bars have a back end connection ∅ 130 mm for direct fitting onto arbors for Bridge bars (SA and HSK) or onto the Graflex® adapter.
When using the Graflex® adapter, extensions are possible as well as spindle flange clamping, see Graflex® modular system.
Angular position of the Bridge bar every 30° onto the arbors or Graflex® adapter, for optimized magazine storage.

Bridge bars can hold rough, fine, counterweight or Graflex® boring blocks.
The boring blocks are locked onto the Bridge bar by means of two cylinders actuated by three clamping screws: One of the clamping screws has a stop disc, which limits the block's sliding stroke inside its setting capacity and stops the block from sliding out of the Bridge bar. Precise and step free block sliding for diameter adjustment (38 mm stroke on radius), using the block's adjusting screw which is linked to the retaining pin of the Bridge bar.

Coolant through the Bridge bars and the boring blocks, towards the cutting edges.

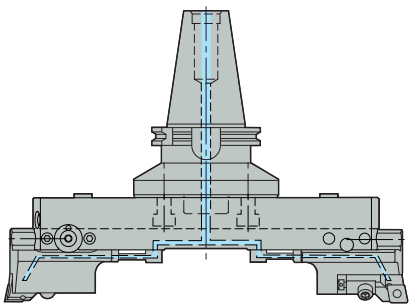

Assembling procedures and max RPM, see Instructions pages 556-561.
Note: These new Bridge bars (Part No. A731S 0_0) cannot hold previous types of boring blocks (Part No. A731 _00 -without S-).

For the Bridge bar and Jumbo Bridge bar selection, related to the boring, OD-overturning or back-boring diameter to be produced, see Bridge bar selection charts, pages 556-561.
Assembling procedures and max RPM, see Instructions pages.

Features

Rough boring block

A large twin rough boring head requires two rough boring blocks, each equipped with a cartridge.
Rough boring block through coolant, towards the cutting edge.

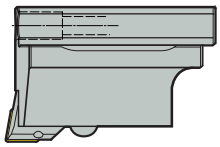

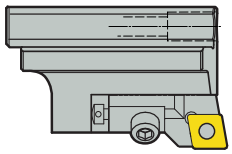

Cartridges
A large range of cartridges is available:
– Cartridges with 90° lead angle, recommended in most of the boring applications for a lower power consumption,
– Cartridges with 80° lead angle, recommended for through hole boring (and chamfering), particularly in cast iron to avoid exit failure.
The power consumption is higher.
– Other cartridges with ISO5611/h1 = 16 mm fitting interface are suitable.

Note: The two cartridges can be set on the same diameter (symmetrical boring) or in a staggered position (staggered boring).
A cartridge raising
corner shim is available as an accessory (Part No. 18LS0316).
Assembling and setting procedures, see Instructions pages.

Fine boring block and counterweight block

A large fine boring head requires one fine boring block equipped with an insert holder and one counterweight block.
Diameter setting mechanism of the fine boring block with a micrometric setting screw (1 increment = 5 μm on the diameter).
The setting system is protected and lubricated for life.
The precision of the mechanism guarantees repeatable accuracy.
The diameter adjusting screw is located on the side of the block to offer easy access.
Fine boring block through coolant, towards the cutting edge.

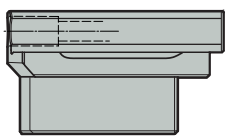

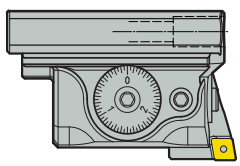

Suitable fine boring insert holders A72460, A72560 or A72660 have to be ordered separately: they are the same as on radial type fine boring heads, see page 544.
Assembling and setting procedures, see Instructions page.

Features

Graflex® boring blocks, for OD-overturning or back-boring

This block has a female Graflex® front connection size G5.
Any Graflex® boring head, special tool or standard Graflex® module size G5 can be mounted onto the Bridge bars, e.g. the drawing showing set-ups for OD-overturning or back-boring using two Graflex® boring blocks fitted with a Graflex® fine boring head A78050 with insert holder (e.g. A72550 for back-boring) a back-boring insert holder (e.g. A789X30CC0690) and a Graflex® counterweight (e.g. Part No. BM050W78050).
Two positions of the Graflex® module are possible on the block, as it has 2x2 ball nose screw positions, and two tenon notches placed at 180°.
Block and boring head through coolant, towards the cutting edge.

Assembling and setting procedures, see Instructions pages.

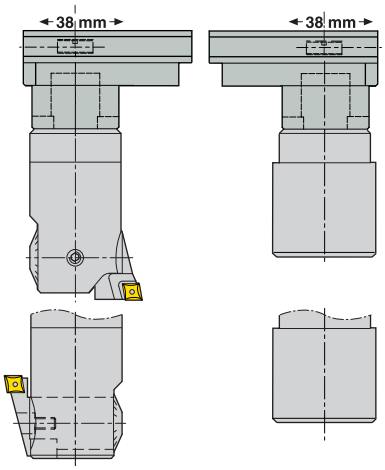

Note: These new boring blocks can also be fitted onto the previous type of Bridge bars

These new boring blocks (Part No. A731S 400, A731S 500, A731S 600, A731S 40128) can also be fitted onto the previous type of Bridge bars (Part No. A731 0_0 -without S-).
Assembling and max. RPM instructions of the previous type of Bridge bars being valid.
In order to keep balance, do not mix new and previous blocks on the same Bridge bar.

Advice for ' through coolant' accessories selection

Roughing (Bridge bar with 2 rough boring blocks):
For directable coolant supply onto both cutting edges, use 2 coolant pipe connectors (Part No. AU731S00700), to be mounted onto the Bridge Bar, and 2 directable coolant supply nozzle sets (Part No. AU731S40700), to be mounted onto each rough boring block.
For normal through coolant from the block's channel, use 2 coolant pipe connectors (Part No. AU731S00700), to be mounted onto the Bridge Bar.

Fine boring (Bridge bar with 1 fine boring block & 1 counterweight):
Use 1 coolant pipe connector (Part No. AU731S00700), to be mounted onto the Bridge Bar in order to connect the fine boring block. As the fine boring block originally features a coolant supply nozzles, directable coolant supply is directly obtained.
OD-overturning (e.g. Bridge bar with 2 Graflex boring blocks equipped with one fine boring head and one counterweight):
Use 1 coolant pipe connector (Part No. AU731S00700), to be mounted onto the Bridge bar in order to connect the Graflex boring block with fitted boring head. Graflex boring block's central coolant channel will feed coolant into the fitted boring head.

Note: Allowable coolant pressure = 70 bars maximum.



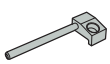

Coolant pipe connector
(Part No. AU731S00700)

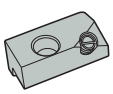

Directive coolant supply nozzle set
(Part No. AU731S40700)

Building Bridge bar boring assemblies:

A rough boring assembly up to ∅ 655 mm requires: 1 Bridge bar (A731S 0_0) + 2 rough boring blocks (2x A731S 400) with cartridges*.

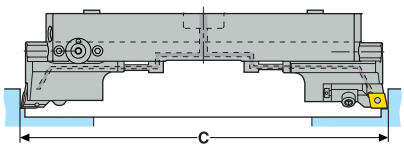

Fig.1

A fine boring assembly up to ∅ 655 mm requires: 1 Bridge bar (A731S 0_0) + 1 fine boring block (A731S 500) with insert holder** + 1 counterweight block (A731S 600).

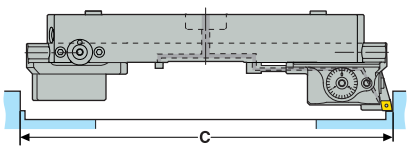

Fig. 2

A rough boring assembly up to ∅ 3205 mm requires: 1 Jumbo Bridge bar (A731S 00_) + 2 Bridge bars (A731S 0_0) + 2 rough boring blocks (2x A731S 400) with cartridges*.

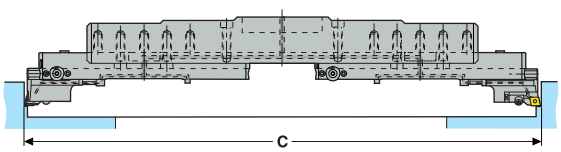

Fig. 3

A fine boring assembly up to ∅ 3205 mm requires: 1 Jumbo Bridge bar (A731S 00_) + 2 Bridge bars (A731S 0_0) + 1 fine boring block (A731S 500) with insert holder** + 1 counterweight block (A731S 600).

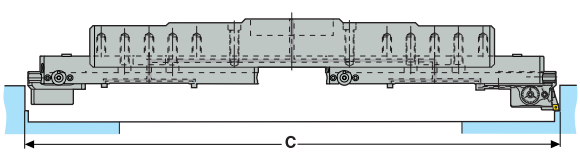

Fig. 4

* Cartridges to be ordered separately.
** Insert holders to be ordered separately.

Building Bridge bar boring assemblies:

Bridge bar(s) selection chart to build a required BORING diameter

For boring C ∅ (mm)	Jumbo Bridge bar	Classic Bridge bar(s)	For rough boring		For fine boring	
				Fig.		Fig.
204-280	–	A731S 010	2x A731S 400	1	A731S 500 + A731S 600	2
279-355	–	A731S 020				
354-430	–	A731S 030				
429-505	–	A731S 040				
504-580	–	A731S 050				
579-655	–	A731S 060				
654-805	A731S 001	2x A731S 010	2x A731S 400	3	A731S 500 + A731S 600	4
654-880		2x A731S 020				
804-955		2x A731S 030				
879-1030		2x A731S 040				
1029-1105		2x A731S 050				
1104-1255	A731S 002	2x A731S 010	2x A731S 400	3	A731S 500 + A731S 600	4
1104-1330		2x A731S 020				
1179-1405		2x A731S 030				
1254-1480		2x A731S 040				
1329-1555		2x A731S 050				
1404-1630		2x A731S 060				
1629-1780	A731S 003	2x A731S 010	2x A731S 400	3	A731S 500 + A731S 600	4
1629-1855		2x A731S 020				
1704-1930		2x A731S 030				
1779-2005		2x A731S 040				
1854-2080		2x A731S 050				
1929-2155		2x A731S 060				
2154-2305	A731S 004	2x A731S 010	2x A731S 400	3	A731S 500 + A731S 600	4
2154-2380		2x A731S 020				
2229-2455		2x A731S 030				
2304-2530		2x A731S 040				
2379-2605		2x A731S 050				
2454-2680		2x A731S 060				
2679-2830	A731S 005	2x A731S 010	2x A731S 400	3	A731S 500 + A731S 600	4
2679-2905		2x A731S 020				
2754-2980		2x A731S 030				
2829-3055		2x A731S 040				
2904-3130		2x A731S 050				
2979-3205		2x A731S 060				

Building Bridge bar OD-overturning assemblies:

A fine OD-overturning assembly up to ∅ 521 mm requires: 1 Bridge bar (A731S 0_0) + 2 Graflex® blocks (2x A731S 40128) + e.g. 1 fine boring head (A780 50) with insert holder* + 1 counterweight (BM050W78050).

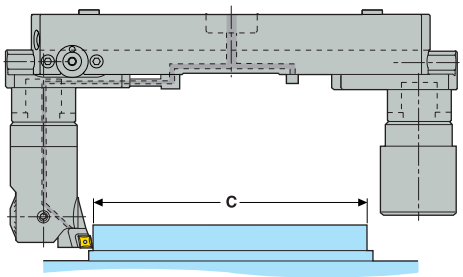

Fig.1

A fine OD-overturning assembly up to ∅ 3071 mm requires: 1 Jumbo Bridge bar (A731S 00_) + 2 Bridge bars (A731S 0_0) + e.g. 1 fine boring head (A780 50) with insert holder* + 1 counterweight (BM050W78050).

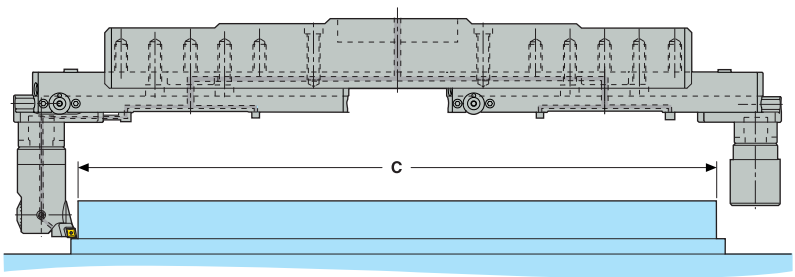

Fig. 2

* Insert holders to be ordered separately.

Building Bridge bar OD-overturning assemblies:

Bridge bar(s) selection chart to build a required OD-overturning diameter

For OD-overturning C ∅ (mm)	Jumbo Bridge bar	Classic Bridge bar(s)	For fine OD-overturning	Fig.
48-146	–	A731S 010	2x A731S 40128 + 1x A780 50 + 1x BM050W78050	1
123-221	–	A731S 020		
198-296	–	A731S 030		
273-371	–	A731S 040		
348-446	–	A731S 050		
423-521	–	A731S 060		
498-671	A731S 001	2x A731S 010	2x A731S 40128 + 1x A780 50 + 1x BM050W78050	2
498-746		2x A731S 020		
648-821		2x A731S 030		
723-896		2x A731S 040		
873-971		2x A731S 050		
948-1121	A731S 002	2x A731S 010	2x A731S 40128 + 1x A780 50 + 1x BM050W78050	2
948-1196		2x A731S 020		
1098-1271		2x A731S 030		
1173-1346		2x A731S 040		
1323-1421		2x A731S 050		
1398-1496		2x A731S 060		
1473-1646	A731S 003	2x A731S 010	2x A731S 40128 + 1x A780 50 + 1x BM050W78050	2
1473-1721		2x A731S 020		
1623-1796		2x A731S 030		
1698-1871		2x A731S 040		
1848-1946		2x A731S 050		
1923-2021		2x A731S 060		
1998-2171	A731S 004	2x A731S 010	2x A731S 40128 + 1x A780 50 + 1x BM050W78050	2
1998-2246		2x A731S 020		
2148-2321		2x A731S 030		
2223-2396		2x A731S 040		
2373-2471		2x A731S 050		
2448-2546		2x A731S 060		
2523-2696	A731S 005	2x A731S 010	2x A731S 40128 + 1x A780 50 + 1x BM050W78050	2
2523-2771		2x A731S 020		
2973-2846		2x A731S 030		
2748-2921		2x A731S 040		
2898-2996		2x A731S 050		
2973-3071		2x A731S 060		

Building Bridge bar back-boring assemblies:

A fine back-boring assembly up to ∅ 676 mm requires: 1 Bridge bar (A731S 0_0) + 2 Graflex® blocks (2x A731S 40128) + e.g. 1 fine boring head (A780 50) with insert holder* + 1 counterweight (BM050W78050).

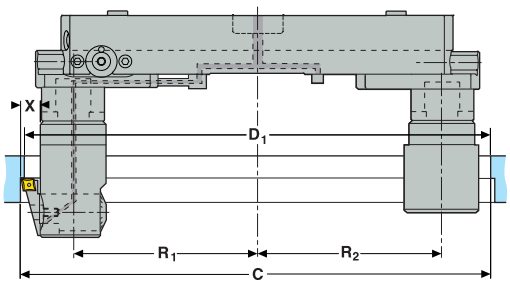

Fig.1

Determination of minimum access diameter (D1 min)

Balancing condition: R1 = R2

D_1 min = C + 5 - X

X = distance between insert's cutting edge and fitted boring head's A78050 body (7,5 < X < 18,5).

The two extreme cases:

- Boring head A78050 set to capacity mini:
  D_1 min = C -2,5
- Boring head A78050 set to capacity maxi:
  D_1 min = C - 13,5

A fine back-boring assembly up to ∅ 3226 mm requires: 1 Jumbo Bridge bar (A731S 00_) + 2 Bridge bars (A731S 0_0) + e.g. 1 fine boring head (A780 50) with insert holder* + 1 counterweight (BM050W78050).

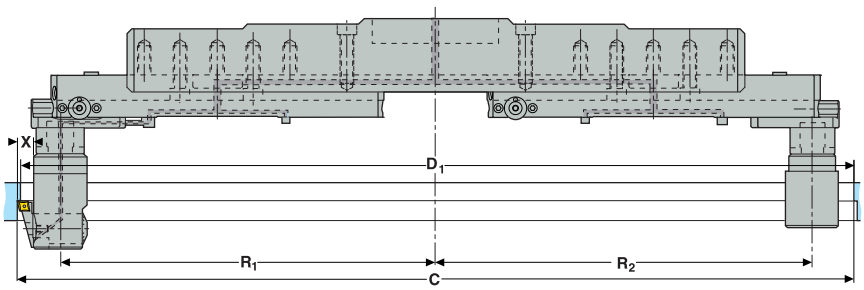

Fig. 2

* Insert holders to be ordered separately.

Building Bridge bar back-boring assemblies:

Bridge bar(s) selection chart to build a required BACK-BORING diameter

For backboring C ∅ (mm)	Jumbo Bridge bar	Classic Bridge bar(s)	For fine back-boring	Fig.
203-301	–	A731S 010	2x A731S 40128 + 1x A780 50 + 1x BM050W78050	1
278-376	–	A731S 020		
353-451	–	A731S 030		
428-526	–	A731S 040		
503-601	–	A731S 050		
578-676	–	A731S 060		
653-826	A731S 001	2x A731S 010	2x A731S 40128 + 1x A780 50 + 1x BM050W78050	2
653-901		2x A731S 020		
803-976		2x A731S 030		
878-1051		2x A731S 040		
1028-1126		2x A731S 050		
1103-1276	A731S 002	2x A731S 010	2x A731S 40128 + 1x A780 50 + 1x BM050W78050	2
1103-1351		2x A731S 020		
1253-1426		2x A731S 030		
1328-1501		2x A731S 040		
1478-1576		2x A731S 050		
1553-1651		2x A731S 060		
1628-1801	A731S 003	2x A731S 010	2x A731S 40128 + 1x A780 50 + 1x BM050W78050	2
1628-1876		2x A731S 020		
1778-1951		2x A731S 030		
1853-2026		2x A731S 040		
2003-2101		2x A731S 050		
2078-2176		2x A731S 060		
2153-2326	A731S 004	2x A731S 010	2x A731S 40128 + 1x A780 50 + 1x BM050W78050	2
2153-2401		2x A731S 020		
2303-2476		2x A731S 030		
2378-2551		2x A731S 040		
2528-2626		2x A731S 050		
2603-2701		2x A731S 060		
2678-2851	A731S 005	2x A731S 010	2x A731S 40128 + 1x A780 50 + 1x BM050W78050	2
2678-2926		2x A731S 020		
2828-3001		2x A731S 030		
2903-3076		2x A731S 040		
3053-3151		2x A731S 050		
3128-3226		2x A731S 060		

EPB 731 200 – Holders and adapter for Bridge bars



- HSK and SA holders for short assemblies
- Graflex® adapter for extended assemblies
- Angular position of the Bridge bar every 30°
- Delivered with a spigot sealing o'ring ∅ 58×3 mm

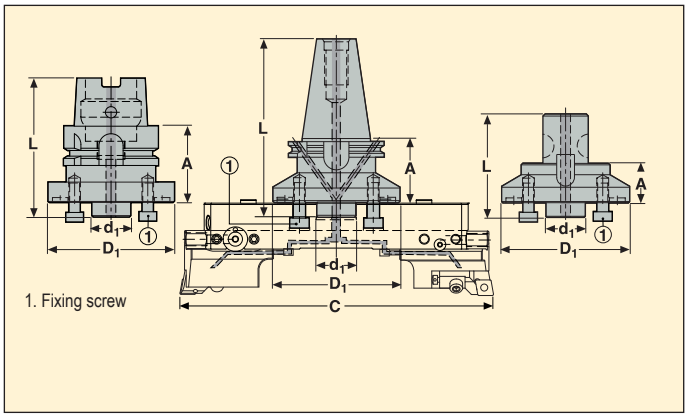

Back end	Size	Capacity C ∅ mm	Part No.	Dimensions in mm A	D_1	d_1	L	KG
DIN 69871-ADB	DIN50 ADB	204-655	E3471731200	65	130	40	166,75	5,74
BT JIS B 6339-ADB	BT50 ADB	204-655	E3416731200	65	130	40	166,75	5,64
DIN 2080	DIN50	204-655	E0050731200	65	130	40	166,75	5,94
ISO 12164-1/ DIN 69893-A	HSK-A100	204-655	E9306731200	65	130	40	115	4,72
GRAFLEX	G7	204-655	A731200	40	130	40	90	3,78

Spare parts*

For Capacity C	Key	Fixing screw
204-655	10SMS795	950D1230

Please check availability in current price and stock-list.
* Tightening torque 80 Nm. For application details, refer to the operating instructions supplied with the Bridge bars and Boring blocks.

EPB 731S0 – Bridge bars



- Coolant through the Bridge bar

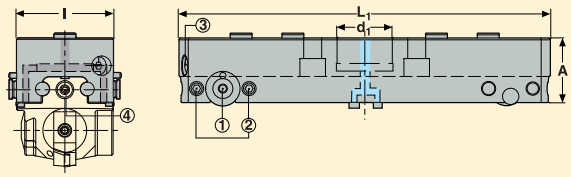

1. Locking screw with stop disc
2. Clamp screw
3. Retaining pin
4. Diameter setting screw

Capacity C ∅ mm Boring*	Part No.	Dimensions in mm d_1	A	l	L_1	KG
204-280	A731S010	40	47	70	195	3,43
279-355	A731S020	40	47	70	269	4,92
354-430	A731S030	40	47	70	344	6,40
429-505	A731S040	40	47	70	419	7,90
504-580	A731S050	40	47	70	494	10,40
579-655	A731S060	40	47	70	569	12,30

Max RPM, see page 572. * For OD-overturning capacities, see Guide pages 558-559.

For larger diameters, see Jumbo Bridge bars on page 564.

Spare parts**

For Capacity C	Locking key	Key	Clamp screw
204-655	03HL05	H05-4	19A71060

Please check availability in current price and stock-list.
** Tightening torque 20 Nm of the clamp screws (2) and locking screw with stop disc (1).
Before diameter setting, make sure retaining pin is engaged. For application details, refer to the operating instructions supplied with the Bridge bars and boring blocks.

Bridge bar boring heads

EPB 731S00 – Jumbo Bridge bars

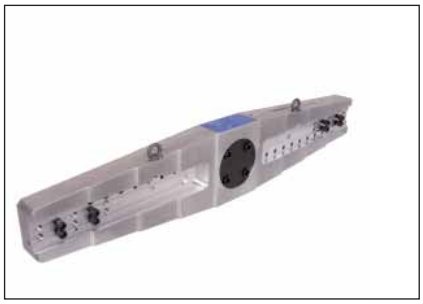

- Jumbo Bridge bars are designed to hold two classic Bridge bars in several positions
- Through coolant Jumbo Bridge bars

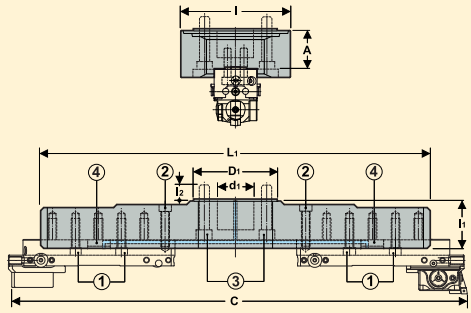

1. Other screw
2. Fixing screw
3. Clamp screw
4. Sealing plug

Capacity C ∅ mm*	**	Part No.	Dimensions in mm							KG
			d_1	A	l	l_1	l_2	L_1	D_1	
654-1105		A731S001	60	63	180	77	24	640	135	20,25
1104-1630		A731S002	60	50	200	80	24	1090	135	34,50
1629-2155	**	A731S003	60	50	200	80	24	1615	135	58,00

* Boring, OD-overturning and back-boring capacities for Jumbo and Bridge bars combinations, see guide pages 556-561.
** Larger sizes A731S004-... (∅ 2154-2680 mm) and A731S005-... (∅ 2679-3205 mm) available on request, see Guide page 552.

Spare parts***

For Capacity C	Sealing plugs	Other screw	O-ring	Lever screw	Fixing screw	Clamp screw
654-1105	AU731S01100	950D1240	90JT02	90AS03	950D1250	950D1670
1104-1630	AU731S01100	950D1240	90JT02	90AS03	950D1250	950D1680
1629-2155	AU731S01100	950D1240	90JT02	90AS03	950D1250	950D16120

Accessories*

Centering spigot
E447153960
E447153960
E447153960

Please check availability in current price and stock-list.
* Accessories not included in delivery.
*** Set of O-ring seals contains 6 O-ring seals ∅ 6 mm for the coolant channels and 1 O-ring seal ∅ 60 mm for the holding bore of Jumbo Bridge bars.

Boring blocks, for Bridge bars EPB 731S0



- For fitting onto Bridge bars
- Coolant through the rough, fine and Graflex boring blocks

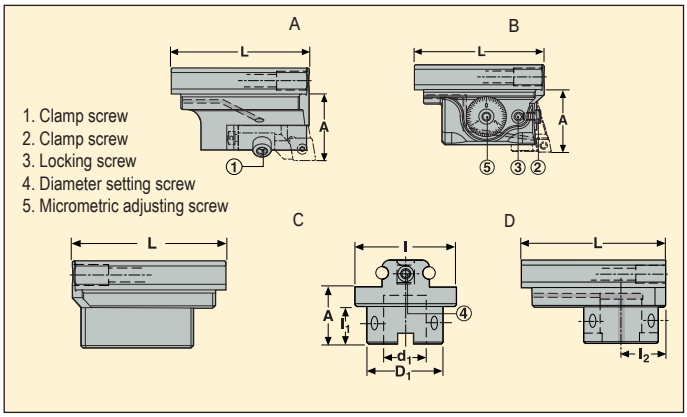

Type of boring block	Part No.	Dimensions in mm							Design	KG
		A	L	l	l_1	l_2	D_1	d_1		
Rough boring block*	A731S400	47	97	70	–	–	–	–	A	1,33
Fine boring block**	A731S500	47	97	70	–	–	–	–	B	1,41
Counterweight	A731S600	–	97	70	–	–	–	–	C	1,49
Graflex size G5***	A731S40128	38	97	70	25	30	50	28,0	D	0,98

* Cartridges to be ordered separately, see page 566 ** Fine boring insert holders size 60 to be ordered separately, see page 544.
*** When using boring head A78050, use the counterweight mass BM050W78050, see Accessories below.

Spare parts****

For	O-ring	Key	Clamp screw
A731S400	90JT01	H05-4	950CB0830
A731S500	90JT01	H05-4	950D0612
A731S600	–	H05-4	–
A731S40128	90JT01	H05-4	–

Accessories*

Counterweight	Corner shim	Coolant kit	Connecting pipe
–	18LS0316	AU731S40700	AU731S00700
–	–	–	AU731S00700
–	–	–	–
BM050W78050	–	–	AU731S00700

Please check availability in current price and stock-list.
* Accessories not included in delivery.
**** Set of O-ring seals contains 6 O-ring seals ∅ 6 mm for the coolant channels and 1 O-ring seal ∅ 60 mm for the holding bore of Jumbo Bridge bars.

Bridge bar boring heads

Cartridges, for Bridge bars rough boring block A731S400



- For fitting onto the rough boring block

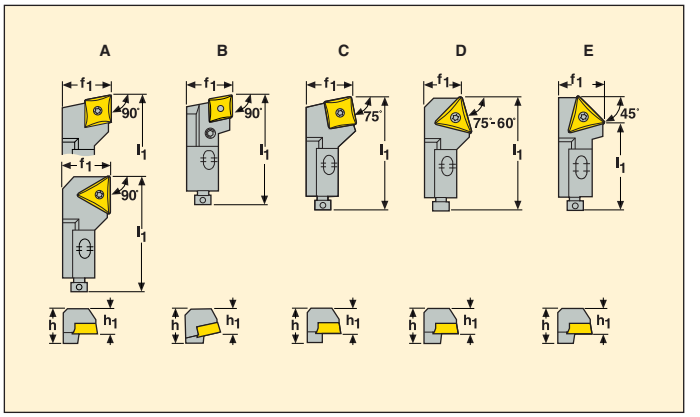

Part No.	Dimensions in mm				Suitable insert size	Design	KG
	l_1	f_1	h	h_1			
SCGCL16CA-16	63	25,0	20	16	CC..16..	A	0,2
STGCL16CA-16	63	25,0	25	16	TC..16T3..	A	0,2
STGCL16CA-22	63	25,0	20	22	TC..2204..	A	0,2
PCGNL16CA-12	63	25,0	25	16	CN..12..	B	0,2
SSRCL16CA-15	63	25,0	20	16	SC..15..	C	0,2
STRCL16CA-16	63	25,0	25	16	TC..16T3..	D	0,2
STRCL16CA-22	63	25,0	20	22	TC..2204..	D	0,2
STTCL16CA-16	63	15,0	25	16	TC..16T3..	D	0,2
STSCL16CA-16	53	25,0	25	16	TC..16T3..	E	0,2

Please check availability in current price and stock-list.
For spare parts for cartridges, see MN 2015 Turning.

Instructions

Bridge bar boring heads, assembling and setting procedures, summary

Below are summarised the main assembly, setting and operating instructions. Due to their large sizes, Bridge bar boring heads require special care. For application details of Bridge bars, boring blocks, cartridges and insert holders, please refer to and respect the detailed operating instructions Ref. 60A731SE../.. supplied with the Bridge bars and boring blocks, as well as Ref. 60A73100XE../.. supplied with Jumbo Bridge bars.
If missing, order a copy from your Seco contact.
Unsuitable setting and operating of the components or programming of the machine (respect max RPM) could cause unpredictable damage.

1. Assembling a Bridge bar onto a holder

1.1 Bridge bar can be fitted directly onto holders for Bridge bars or onto the Graflex® adapter.
1.2 Angular position of the Bridge bar every 30° onto the holder, for optimized magazine storage.
1.3 Bridge bar locking



Fig. 1.1

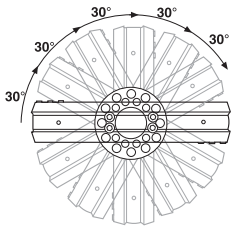

Fig. 1.2

4 x 80 Nm



Fig. 1.3

2. Assembling, setting and locking a boring block onto a Bridge bar

This procedure is valid for every type of boring block : fine boring, rough boring, counterweight and Graflex® types.

2.1. Boring block assembling

2.1.1 On the Bridge bar, loosen the three locking screws: totally unscrew the stop disc screw (A) until stop; only slightly unscrew both classic screws (B) (do not fully unscrew).

2.1.2 Slide the boring block into the Bridge bar until the block engages ('click fits') into Bridge bar's retaining pin (C). Check that this retains the boring block from free sliding in and out (for diameter setting, its further sliding will be controlled by its diameter adjusting screw).

Screw in the stop disc screw (A) until its disc fits into boring block's recess groove, without tightening.
The boring block is now ready for diameter setting and locking procedures, see 2.3 and 2.4.

2.2 Note: Boring block dismounting

On the Bridge bar, loosen the three locking screws (A) & (B), see 2.1.
Twist and hold the pin's driving cam (D) approx ½ revolution (clockwise or counterclockwise) from its neutral position in order to retract the retaining pin (C) to disengage it from the boring block, thus enabling the sliding out of the boring block from the Bridge bar. While the pin is being retracted, maintain control of the block that is sliding out, to prevent accidents.



Fig. 2.1.1



Fig. 2.1.2

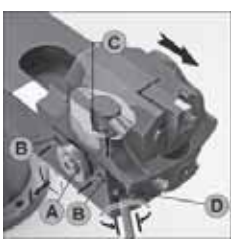

Fig. 2.2

Instructions

Bridge bar boring heads, assembling and setting procedures, summary (cont:)

2.3 Boring block diameter setting

Note: before setting, make sure the retaining pin is engaged.

2.3.1 Set boring block on required diameter using boring block's diameter setting screw.

2.3.2 Set symmetrically (same graduation).

2.4 Boring block locking

Note: before locking, make sure the retaining pin is engaged.

Tighten the three locking screws starting by the stop disc screw (rank 1, 2, 3, see Fig 2.4).

Make sure the tightening torque is effective on all 3 locking screws (3 x 20 Nm).



Fig. 2.3.1



Fig. 2.3.2

3 x 20 Nm



Fig. 2.4

3. Rough boring assembly (two rough boring blocks).

3.1 Cartridge fitting.

Fit the cartridge onto the rough boring block so that the length (L) from the insert cutting edge to the block's inner face is set at 81,5 mm (this will allow you to control the cutting edge diameter using the graduated scale on the Bridge bar).

Set and lock the block on the required boring diameter, see 2.3 and 2.4.

Note: Cartridge fitting with corner shim (for staggered boring).

For staggered boring, the cutting edge operating on the minor diameter must be advanced to a leading position. Its minimum advanced value is equal to half the feed per revolution. For staggered boring with 90° lead angle cartridge, the raising of the leading cartridge (e.g. 0.5 to 1 mm) can be achieved by the cartridge's height adjustment screw or by setting a shim under it. With smaller lead angle cartridges, a higher cutting edge offset should be used (eg. 1 to 3 mm).

This should not be achieved by raising a standard cartridge, as the cartridge's oblique fixing screw would not clamp properly: therefore a 3 mm corner shim is available as accessories (Part No. 18LS0316).

1 x 20 Nm



Fig. 3.1

Instructions

Bridge bar boring heads, assembling and setting procedures, summary (cont:)

4. Fine boring assembly (one fine boring and one counterweight block).

4.1 Insert holder fitting.
Preset insert holder so that the length (L) from the insert cutting edge to the block's inner face is set at 81,5 mm (this will allow you to control the cutting edge diameter using the graduated scale on the Bridge bar).
Preset and lock boring block on required boring diameter, see 2.3 and 2.4.

4.2 Diameter fine setting (after boring block approximate diameter setting and locking).
4.2.1 Barrel unlocking.
4.2.2 Diameter fine adjusting.
4.2.3 Barrel locking.

1 x 10 Nm



Fig. 4.1



Fig. 4.2.1



Fig. 4.2.2

1 x 10 Nm



Fig. 4.2.3

5. Graflex® blocks assembly for OD-overturning or back-boring (two Graflex® blocks equipped with a Graflex® boring head and a counterweight mass).

For block's diameter setting and locking, see 2.3 and 2.4.
Note: Remember that OD-overturning requires counterclockwise spindle rotation.

Note: Use of through coolant accessories for Bridge bars
Instructions related to the use of through coolant accessories for Bridge bars boring heads are delivered with the through coolant accessories.

Instuctions

Bridge bar boring heads, assembling and setting procedures, summary (cont).

Bridge bar boring heads using Jumbo Bridge bars

6. Assembling two standard Bridge bars onto a Jumbo
6.1 Select two identical Bridge bars.
6.2 Place the sealing rings (∅ 6x1.5 mm) in each Jumbo body counterbore (part of Set of 'O' ring seals delivered with Jumbo).
6.3 Remove the sealing cap on the Bridge bar to access to the threaded hole of the lateral fixing screw.
6.4 Place the sealing plug in central bore ∅ 40 mm of each Bridge bar.
6.5.1 After locking, the coolant holes between Bridge bar and Jumbo will be connected.
6.5.2 Place each Bridge bar in position onto the Jumbo plate in accordance to the chart attached on the Jumbo. Two identical Bridge bars in symmetrical position.
6.6 Lock each Bridge bar by tightening the 4 central Bridge fixing screws (tightening torque: 50 Nm) and the lateral Bridge fixing screw (tightening torque: 50 Nm).



Fig. 6.1

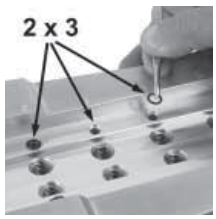

Fig. 6.2



Fig. 6.3



Fig. 6.4



Fig. 6.5.1



Fig. 6.5.2

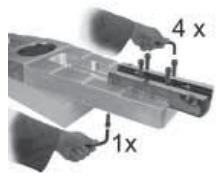

Fig. 6.6

Instuctions

Bridge bar boring heads, assembling and setting procedures, summary (cont).

7. Jumbo Bridge bar holding.
Jumbo Bridge bars sizes A731S001, 002, 003 have two spindle fitting possibilities:
7.1 Fitting onto a milling cutter holder (flange mounting Type 569, spigot ∅ 60 mm).
7.2 Fitting directly onto the machine spindle: DIN2079/50 spindle front end (1) with a centering spigot available as accessories (2) (Part No. E447153960).
7.3 Locking the 4 Jumbo locking screws (tightening torque: 50 Nm).

Sizes A731S004-... and A731S005-... available on request - will only have one fitting possibilitiy according to the machine spindle.

8. Handling/Transport.
8.1 Fit the two lifting rings into the Jumbo's lateral or back face, to be suitable for horizontal or vertical spindle fitting.



Fig. 7.1

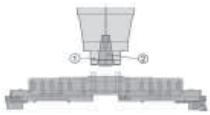

Fig. 7.2



Fig. 7.3



Fig. 8.1

Recommended machining conditions

Best performances are obtained with through coolant (higher machining data, better surface finish, better chip evacuation).
Rough boring depends on the priorities: higher feed or larger chip removal use symmetrical setting of the cartridges (most common method, double feed compared to staggered setting), or staggered setting (double depth of cut).
In fine boring in steel, with good conditions, we recommend to use Cermet inserts (CMP grade), for high speeds and long life.

Troubleshooting

Please refer to troubleshooting advice, in rough boring chapter page 496, or fine boring chapter page 534.

Maximum speeds for Bridge bars

Due to the large sizes of Bridge bar boring heads, unsuitable RPM programming could cause unpredictable damage.
Below max. RPM are for present Bridge bar boring assemblies using present Bridge bar types (Part No. A731S 0_0) rough boring, fine boring and counterweight boring blocks (Part No. A731S _00) and Jumbo Bridge bar (Part No. A731 00_). For other assemblies, please contact your local Seco representative.
Note: when using present boring blocks (Part No. A731S 400, A731S 500, A731S 600, A731S 40128) onto previous type Bridge bars (Part No. A731 0_0 -without S-), the max RPM to consider are the ones recommended for the previous type Bridge Bars.To maintain balance,do not mix new and previous blocks on the same Bridge bar.

Head based on	Capacity ∅ (mm)	Max. RPM (RPM)	Implied max cutting speed v_c at min. Cap. (m/min)	Implied max cutting speed v_c at max. Cap. (m/min)
Bridge bar boring heads (with two boring blocks set symmetrically)				
A731S010	204 - 280	1600	1025	1407
A731S020	279 - 355	1150	1007	1282
A731S030	354 - 430	900	1000	1215
A731S040	429 - 505	750	1010	1189
A731S050	504 - 580	650	1029	1184
A731S060	579 - 655	550	1000	1131
Jumbo bridge bars (with two identical Bridge bars and boring blocks set symmetrically)				
A731S 001	654-1105	170	349	590
A731S 002	1104-1630	100	346	512
A731S 003	1629-2155	70	358	473
A731S 004	2154-2680	50	338	420
A731S 005	2679-3205	40	336	402

Note: The maximum speeds are related to the boring head's mechanical design and balancing quality. Speeds inside these limits have to be chosen in regard to the other machining conditions, e.g. workpiece material, cutting edge (insert), tooling length, machine spindle.


SECO
GRAFLEX
LITELINE
M403 6ASA
SECO
GRAFLEX
LITELINE
M402 6A
LITELINE

Range overview

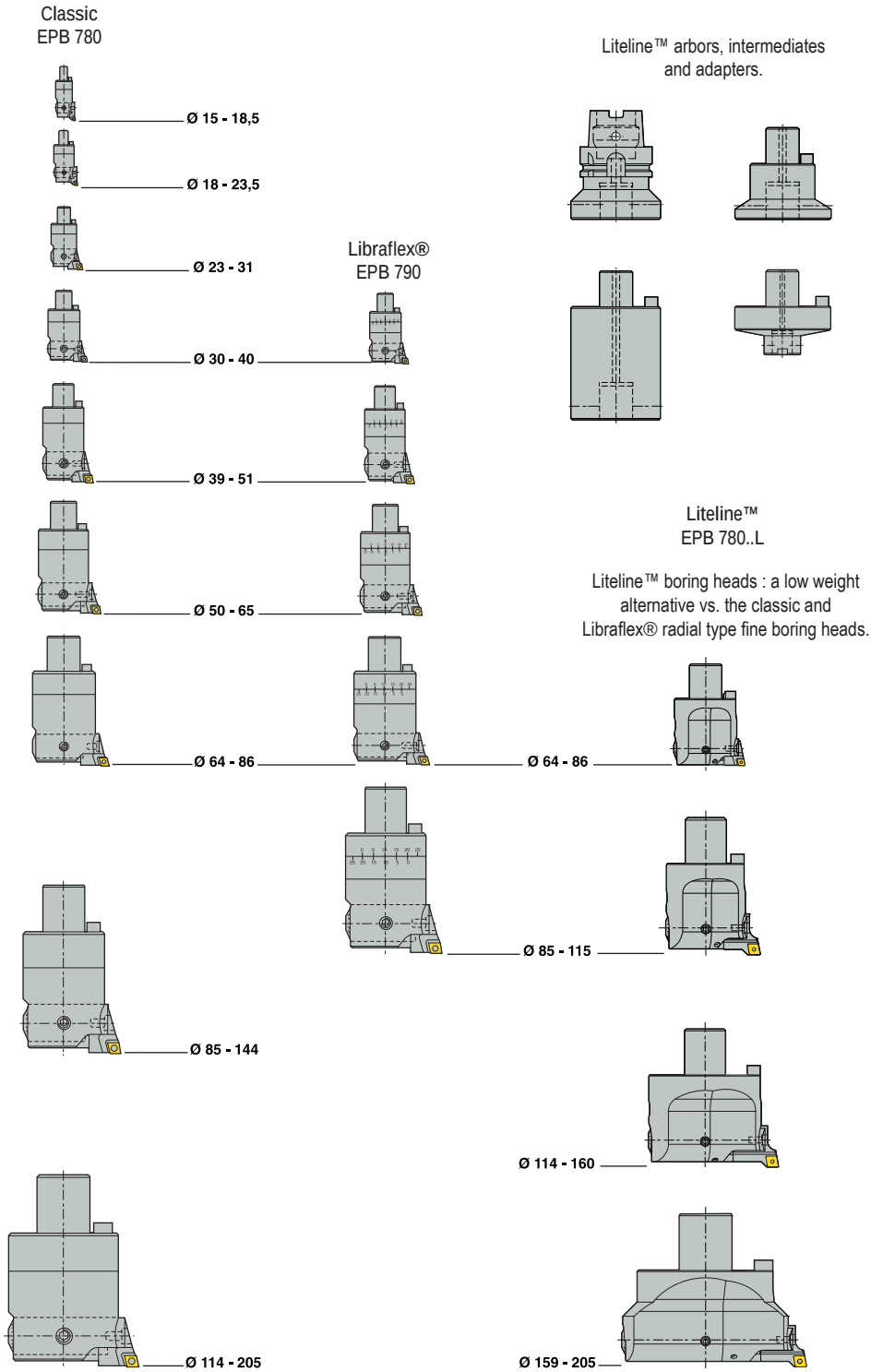

Features
Liteline™ fine boring heads

Graflex® Liteline™ radial type fine boring heads: made from low weight high tensile aluminium.
4 heads for boring capacity ∅ 64 to 205 mm (as weight reduction is mainly required in the large boring assembly sizes).
With Graflex® connection back end G.A or G.B (large flange OD* and expandable tenon).
Liteline™ boring heads are pre-balanced.



Micrometric adjustment
Insert holder setting mechanism with a micrometric adjusting screw (1 increment = 0,01 mm on the diameter) and a vernier scale (resolution of 2,5 µm on the diameter).
The precision of the mechanism guarantees repeatable accuracy.
Angular orientation of the cutting edge according to DIN 69871/ISO 7388 for SA and ISO 12164 for HSK.
Coolant through the head directed towards the cutting edge.

Suitable insert holders to be ordered separately.
For Liteline™ boring heads operating instructions and maximum speeds, see Instructions page 587.

* OD means outer diameter.



Liteline™ intermediates**

Graflex® Liteline™ extensions and reducers: made from low weight high tensile aluminium.
With Graflex® connection back end G.A or G.B (large flange OD and expandable tenon).
With Graflex® connection front end G.A or G.B (large flange OD).



Liteline™ arbors and adapters**

Graflex® Liteline™ arbors: made from steel.
To realize integral Liteline™ assemblies, directly from the spindle.
With back end tapers HSK-A, DIN, BT, Ansi-CAT Imperial, Seco-Capto™.
With Graflex® connection front end G.A or G.B (large flange OD).



Graflex® Liteline™ adapters: made from steel.
To hold Graflex® Liteline™ boring heads and intermediates onto Graflex® classic arbors and intermediates.
With classic Graflex® connection back end sizes (classic flange OD and tenon).
With Graflex® connection front end G.A or G.B (large flange OD).



** The balancing quality of the Liteline™ intermediates, arbors and adapters is shown in the Product pages: 1 = Fine balanced, 2 = Pre-balanced. For detailed balancing information, see General guide in the Seco Tooling Systems catalogue. The balancing qualities are suitable for Liteline™ boring heads use.

Features

Liteline™ items Graflex® connections G.A or G.B: with large OD and expandable tenon

The Graflex® connection design (sizes G5A, G6A, G6B, G7A) guarantees rigidity and long life to the Liteline™ modules mainly made from aluminium.
The differences with the classic Graflex® connection design are:
- Graflex® front ends G.A or G.B are with larger outer diameter vs. classic:
G5A (55mm) // G5(50); G6B (70) // G6 (63); G6B (100) // G6 (63); G7A (120) // G7 (90). Connection bores, ball nose screws and tenon slots are similar to classic Graflex®.
- Graflex® back ends G.A or G.B are with larger outer diameter (see above) and have an expandable tenon. Connection shanks are similar to classic Graflex®.
By tightening the tenon's expanding screw, the tenon/slot clearance is eliminated and bi-lateral plain-face tenon/slot clamping is achieved.

For detailed Graflex® connections G.A or G.B description, assembly procedure and locking torques, see Graflex® connection page 602.

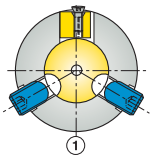

Unclamped

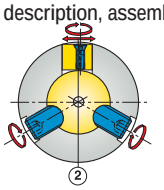

Clamped

Liteline™ assemblies: integral, or using classic Graflex® arbors

Integral Liteline™ assemblies

Best weight reduction and rigidity are obtained with integral Liteline™ Graflex® assemblies, using exclusively modules from the Liteline™ range: Liteline™ Graflex® boring heads, extensions and reducers are made from aluminium and have larger outer diameters than classic Graflex® modules.
Their connection onto short Liteline™ arbors, in steel, with same large OD achieves high assembled rigidity.
Note: There are no Liteline™ Graflex® arbors size G5A available: Liteline™ Graflex® boring heads and intermediates size G5A have to be fitted onto existing classic Graflex® arbors size G5.



Assemble Liteline™ items with Graflex® connection G.A or G.B onto classic Graflex®

There are Graflex® Liteline™ adapters size G6/ G6A; G6/ G6B; G7/ G6B and G7/ G7A available to fit Liteline™ Graflex® boring heads or intermediates (with large Liteline™ Graflex® OD) onto classic Graflex® arbors (with classic Graflex® OD): an economical solution when customers still have classic Graflex® arbors available.
Note : There is no Liteline™ adapter size G5/ G5A available: Liteline™ Graflex® boring heads and intermediates size G5A have to be fitted directly onto existing classic Graflex® arbors size G5.



EPB 780..L – Graflex® Liteline™ fine boring heads



- Made from low weight high tensile aluminium
- With micrometric adjusting : increment 0,01 mm (0.0004")
- and vernier 2,5 µm (0.0001") on the diameter
- WithGraflex® back end G.A or G.B.

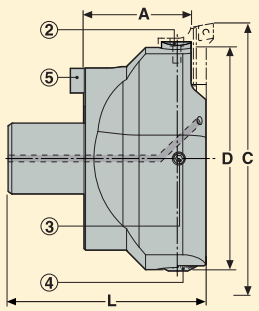

2. Clamp screw
3. Locking screw
4. Micrometric adjusting screw
5. Expanding screw

Graflex size	Capacity C ∅ mm	Part No.	Dimensions in mm A	D	L	Insert holder size	KG*
G5A	64-86	A7805AL	49,7	54	87,7	50	0,57
G6A	85-115	A7806AL	65,5	70	115	6A	1,43
G6B	114-160	A7806BL	65,5	100	115	6B	2,1
G7A	159-205	A7807AL	70,5	145	130	6B	3,1

Insert holders have to be ordered separately, see page 578.

*Without insert holder

Spare parts

For	Locking screw	Key (T-handle)	Key	Clamp screw
A780 5AL	950L0612	03M03C	T20P-4	950D0410
A780 6AL	950L0816	H04-4	T20P-4	950D0514
A780 6BL	950L0816	H04-4	T20P-4	950D0514
A780 7AL	950L0816	H04-4	T20P-4	950D0514

Please check availability in current price and stock-list.

Fine boring insert holders, for EPB 780..L Liteline™ boring heads



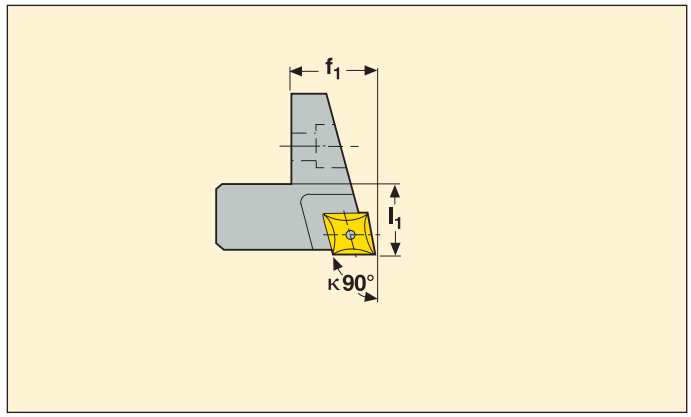

κ°	For Liteline boring head	*	Insert holder size	Capacity C ∅ mm	Part No.	Dimensions in mm		Suitable insert size	KG
						l_1	f_1		
90° for CC inserts	EPB 78050 / EPB 79050	*	50	64-86	A72550	10,3	12,5	CC...0602...	0,02
	EPB 7806AL		6A	85-115	A7256A	14,5	18,5	CC...09T3...	0,05
	EPB 7806BL / EPB 7807AL		6B	114-205	A7256B	14,5	18,5	CC...09T3...	0,05

* All existing insert holders from existing heads A780 50 and A790 50 are suitable for Liteline™ head A780 5AL, e.g. insert holder A725 50 (90°) shown (other types see page 544).

Spare parts

For insert size	Insert screw	Insert key
		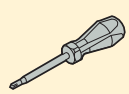
CC...0602...	C02504-T07P	T07P-3
CC...09T3...	C04008-T15P	T15P-3

Please check availability in current price and stock-list.

EPB EM..A/B – Arbors HSK-A, for Graflex® Liteline™ boring heads and intermediates

HSK-A/ ISO 12164-1-A



- With Graflex® front end G.A or G.B to hold Liteline™ heads and intermediates

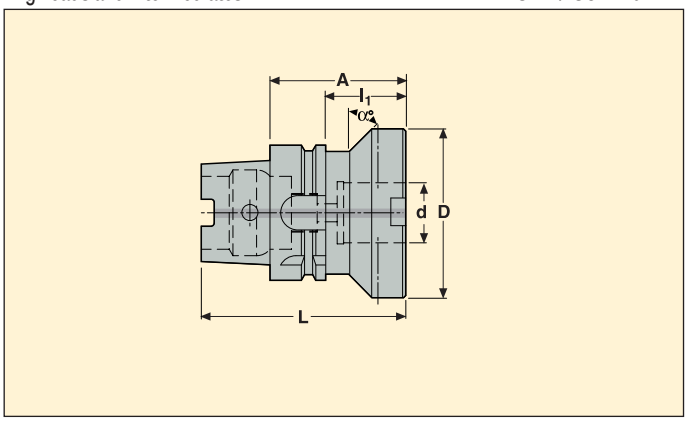

Taper	Graflex bore	*	Part No.	Dimensions in mm					α°	Balancing	KG
				A	D	d	L	l_1			
HSK-A63	G5	*	EM93044012860	60	50	28	92	34	–	1	2,2
	G6A		EM930440136A70	70	70	36	102	44	15	2	1,33
	G6B		EM930440136B70	70	100	36	102	44	–	2	2,14
HSK-A100	G5	*	EM93064012865	65	50	28	115	36	–	1	5,07
	G6A		EM930640136A75	75	70	36	125	46	–	2	2,95
	G6B		EM930640136B75	75	100	36	125	46	60	2	4,0
	G7A		EM930640146A85	85	120	46	135	56	45	2	5,04

Please check availability in current price and stock-list.

* To hold Liteline™ heads and intermediates with Graflex® size G5A, use existing Graflex® arbors with size G5, eg. the short arbors shown above (other arbor lengths, see Seco Tooling Systems catalogue).

EPB EM..A/B – Arbors DIN 69871-ADB, for Graflex® Liteline™ boring heads and intermediates

DIN 69871-ADB



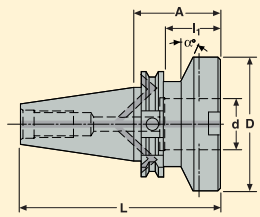

- With Graflex® front end G.A or G.B to hold Liteline™ heads and intermediates

Taper	Graflex size	*	Part No.	Dimensions in mm A	D	d	L	l_1	α°	Balancing	KG
DIN40 ADB	G5	*	EM34694012840	40	50	28	108,4	20,9	–	1	0,93
	G6A		EM346940136A60	60	70	36	128,4	40,9	–	2	1,37
	G6B		EM346940136B60	60	100	36	128,4	40,9	–	2	2,07
DIN50 ADB	G5	*	EM34714012840	40	50	28	141,7	20,9	–	1	2,75
	G6A		EM347140136A45	45	70	36	146,7	25,9	–	2	2,96
	G6B		EM347140136B50	50	100	36	151,7	30,9	45	2	3,66
	G7A		EM347140146A60	60	120	46	161,7	40,9	65	2	4,26

Please check availability in current price and stock-list.

* To hold Liteline™ heads and intermediates with Graflex® size G5A, use existing Graflex® arbors with size G5, eg. the short arbors shown above (other arbor lengths, see Seco Tooling Systems catalogue).

EPB EM..A/B – Arbors BT JIS-ADB, for Graflex® Liteline™ boring heads and intermediates

BT JIS B 6339-ADB



- With Graflex® front end G.A or G.B to hold Liteline™ heads and intermediates

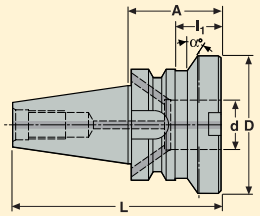

Taper	Graflex size	*	Part No.	Dimensions in mm A	D	d	L	l_1	α°	Balancing	KG
BT40 ADB	G5	*	EM34144012845	45	50	28	110,4	18	–	1	1,12
	G6A		EM341440136A55	55	70	36	120,4	28	45	2	1,34
	G6B		EM341440136B55	55	100	36	120,4	28	–	2	1,92
BT50 ADB	G5	*	EM34164012855	55	50	28	156,8	17	–	1	3,97
	G6A		EM341640136A63	63	70	36	164,8	25	45	2	3,92
	G6B		EM341640136B63	63	100	36	164,8	25	–	2	4,62
	G7A		EM341640146A65	65	120	46	166,8	27	30	2	4,92

Please check availability in current price and stock-list.

* To hold Liteline™ heads and intermediates with Graflex® size G5A, use existing Graflex® arbors with size G5, eg. the short arbors shown above (other arbor lengths, see Seco Tooling Systems catalogue).

EPB EM..A/B – Arbors CAT ADB, for Graflex® Liteline™ boring heads and intermediates

CAT ANSI B5.50 ADB



- With Graflex® front end G.A or G.B to hold Liteline™ heads and intermediates

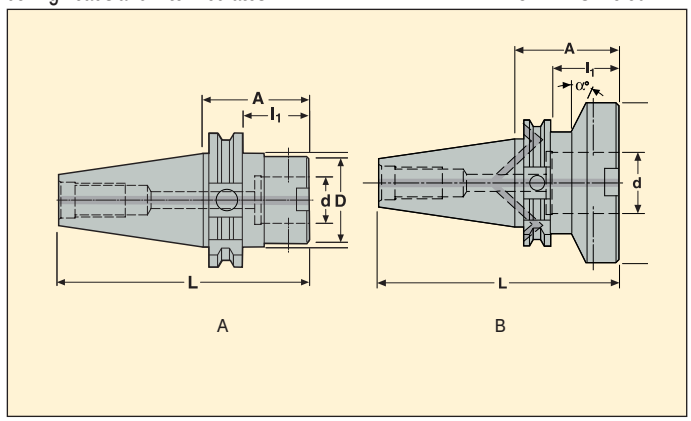

Taper	Graflex size	*	Part No.	Dimensions in mm A	D	D_1	d	L	l_1	α°	Design	Balancing	KG
CAT40 ADB	G5	*	EM25024012840	39,878	50,038	44,45	28	108,458	20,828	–	A	1	0,9
	G6A		EM250240136A60	59,944	69,85	44,45	36,068	128,27	25,908	–	B	2	1,32
	G6B		EM250240136B60	59,944	100,1	44,45	36,068	128,27	25,908	–	B	2	2,03
CAT50 ADB	G5	*	EM25044012840	39,878	50,038	69,85	28	141,732	20,828	–	A	1	2,99
	G6A		EM250440136A45	44,958	69,9	–	36,068	146,812	25,9	–	B	2	2,94
	G6B		EM250440136B50	50,038	100,1	69,85	36,068	151,892	30,93	–	B	2	3,52
	G7A		EM250440146A70	69,85	119,9	69,85	45,974	171,704	50,75	35	B	2	4,87

Please check availability in current price and stock-list.

* To hold Liteline™ heads and intermediates with Graflex® size G5A, use existing Graflex® arbors with size G5, eg. the short arbors shown above (other arbor lengths, see Seco Tooling Systems catalogue).

EPB C..391..A/B – Arbors Seco-Capto™, for Graflex® Liteline™ boring heads and intermediates

Seco-Capto™



- With Graflex® front end G.A or G.B to hold Liteline™ heads and intermediates

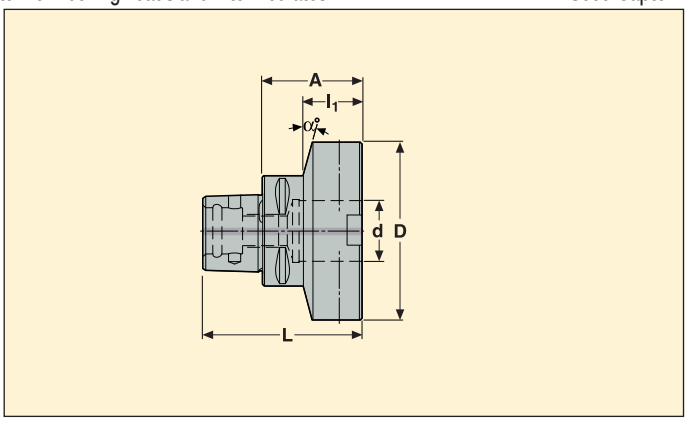

Seco-Capto size	Graflex size	*	Part No.	Dimensions in mm A	D	d	L	l_1	α°	Balancing	KG
C5	G5	*	C5-391.0401-28045	45	50	28	75	–	–	1	0,64
C6	G5	*	C6-391.0401-28050	50	50	28	88	25	–	1	1,04
	G6A		C6-391.0401-36A55	55	70	36	93	33	60	2	1,33
	G6B		C6-391.0401-36B55	55	100	36	93	33	15	2	2,2
C8	G5	*	C8-391.0401-28050	50	50	28	98	17	–	1	1,92
	G7A		C8-391.0401-46A65	65	120	46	113	35	45	2	3,44

Please check availability in current price and stock-list.

* To hold Liteline™ heads and intermediates with Graflex® size G5A, use existing Graflex® arbors with size G5, eg. the short arbors shown above (other arbor lengths, see Seco Tooling Systems catalogue).

EPB M402..A/B – Graflex® Liteline™ extensions

Graflex®



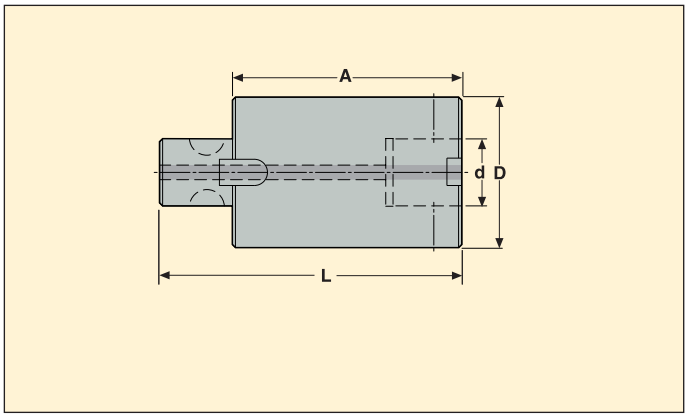

- Low weight extensions
- With Graflex® front and back ends G.A or G.B.

Taper	Graflex size	Part No.	Dimensions in mm				Balancing	KG
			A	D	d	L		
G5A	G5A	M4025A5A060L	60	55	28	90	2	0,5
	G5A	M4025A5A090L	90	55	28	120	2	0,68
	G5A	M4025A5A135L	135	55	28	165	2	0,96
G6A	G6A	M4026A6A080L	80	70	36	120	2	1,04
	G6A	M4026A6A120L	120	70	36	160	2	1,45
	G6A	M4026A6A180L	180	70	36	220	2	2,08
G6B	G6B	M4026B6B100L	100	100	36	140	2	2,36
	G6B	M4026B6B150L	150	100	36	190	2	3,4
	G6B	M4026B6B225L	225	100	36	265	2	5,04
G7A	G7A	M4027A7A120L	120	120	46	170	2	4,1
	G7A	M4027A7A180L	180	120	46	230	2	5,96
	G7A	M4027A7A270L	270	120	46	320	2	8,42

Please check availability in current price and stock-list.

EPB M403..A/B – Graflex® Liteline™ reducers

Graflex®



- Low weight reducers
- With Graflex® front and back ends G.A or G.B.

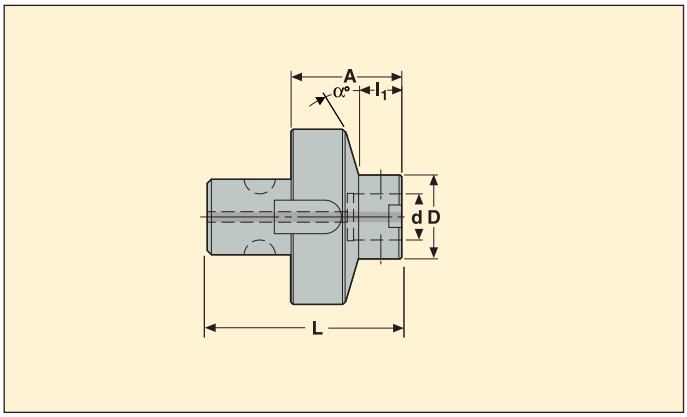

Taper	Graflex size	Part No.	Dimensions in mm					α°	Balancing	KG
			A	D	d	L	l_1			
G6A	G5A	M4036A5A065L	65	55	28	105	26	55	2	0,83
G6B	G5A	M4036B5A065L	65	55	28	105	26	26	2	1,19
	G6A	M4036B6A075L	75	70	36	115	32	45	2	1,37
G7A	G5A	M4037A5A075L	75	55	28	125	26	33	2	1,93
	G6A	M4037A6A085L	85	70	36	135	32	51	2	2,19
	G6B	M4037A6B095L	95	100	36	145	32	74	2	2,92

Please check availability in current price and stock-list.

EPB M402/M403..A/B – Graflex® classic to Graflex® G.A or G.B adapters

Graflex®



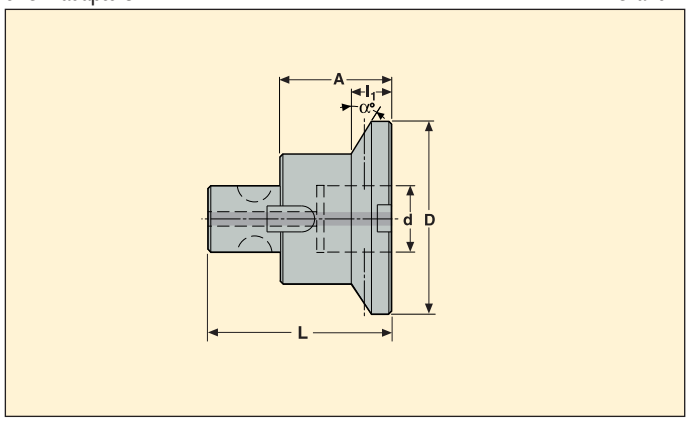

- With Graflex® front end G.A or G.B and Graflex® classic back end
- To fit Liteline™ intermediates and heads (with Graflex® connection G.A or G.B) onto existing Graflex® arbors and intermediates (with classic Graflex® connection sizes)

Taper	Graflex size*	Part No.	Dimensions in mm					α°	Balancing	KG
			A	D	d	L	l_1			
G6	G6A	M40266A	60	70	36	100	13,5	30	2	1,45
	G6B	M40266B	60	100	36	100	23,5	30	2	1,97
G7	G6B	M40376B	60	100	36	110	13,5	30	2	3,3
	G7A	M40277A	70	120	46	120	16,7	30	2	3,88

Please check availability in current price and stock-list.

* Liteline™ heads and intermediates with Graflex® size G5A have to be held directly onto Graflex® arbors with size G5 (see pages 579-583).

Instructions
Liteline™ boring heads, insert holder fitting procedure

Remove the fixing screw (2).
Make sure the barrel locking screw (3) is unlocked, to slightly free barrel's orientation during insert holder fitting (9).
Fit the insert holder (9) onto the barrel (10).
Pre-fasten screw (2).
Tighten screw (3) to immobilize the barrel (10).
Fasten screw (2).
Fit an insert (15) with screw (12).

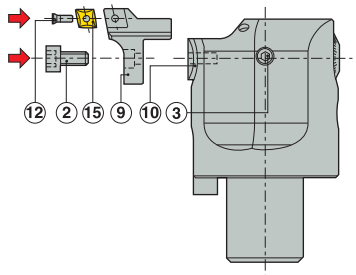

Liteline™ boring heads, diameter setting procedure

- Unlock the barrel locking screw (3).
- Set the diameter by the micrometric adjusting screw (R), using the dial and vernier.
- Tighten screw (3) to lock the barrel in set position.

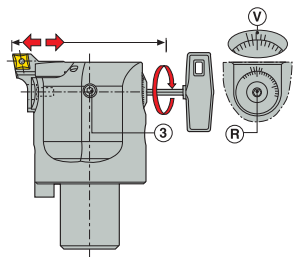

Adjustment precision
- Setting dial (R): 1 increment = 0,01 mm (0.0004") on diameter.
- Vernier fine adjustment (V): 2,5 μm resolution on diameter.
Clockwise adjustment = diameter increase (counterclockwise = diameter reduction).

Note: Best component bore diameter precision is obtained by presetting the head (on a presetter) at a smaller diameter (e.g. -20 μm), running a test bore, and correcting to the required diameter. Heads are designed for best setting reliability (for reaching the required diameter) by adjusting clockwise out to diameter.
Therefore for diameter reduction, total setting reliability is obtained by a preliminary 1/2 to 1 rotation counterclockwise, then setting clockwise to the required diameter.

Troubleshooting
Please refer to fine boring troubleshooting advice, in chapter Axiabore™, page 534.

Maximum speeds for Liteline™ type heads

Head	Capacity ∅ (mm)	Max. RPM (RPM)	Max. cutting speed v_c at min. Cap. (m/min)	Max. cutting speed v_c at max. Cap. (m/min)
Liteline™ type				
A7805AL	64-86	7500	1508	2026
A7806AL	85-115	5600	1495	2023
A7806BL	114-160	4000	1432	2010
A7807AL	159-205	3000	1498	1932

Note: The maximum speeds are related to the boring head's mechanical design and balancing quality. Speeds inside these limits have to be chosen in regard to the other machining conditions, e.g. workpiece material, cutting edge (insert), tooling length, machine spindle.

Custom boring solutions

Custom made boring solutions, examples:

- Multi-edge boring bars
- Special extensions, e.g. insert holder A7. with guiding pads
- Bars combining drilling, boring, chamfering, reaming, threading,...

Please enquire







A selection of inserts for boring

This is a selection of inserts from the total Seco range, which are particularly suitable for boring. The selected insert sizes are those suitable for the range of boring heads.
Inserts for rough boring have high toughness to guarantee high metal removal and positive geometries to minimise spindle torque requirement.
Inserts for fine boring have positive geometries and sharp edge wear resistant grades for accurate control of the bore tolerance, geometry and surface finish.

Code key, examples

CCMT120408	-	F2	TP3500
Size (ISO designation)		Seco geometry	Seco grade

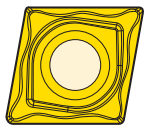

CCGT09T304	-	03	G3
Size (ISO designation)		EPB grade	EPB geometry

Insert grades for boring – ISO workpiece material classification

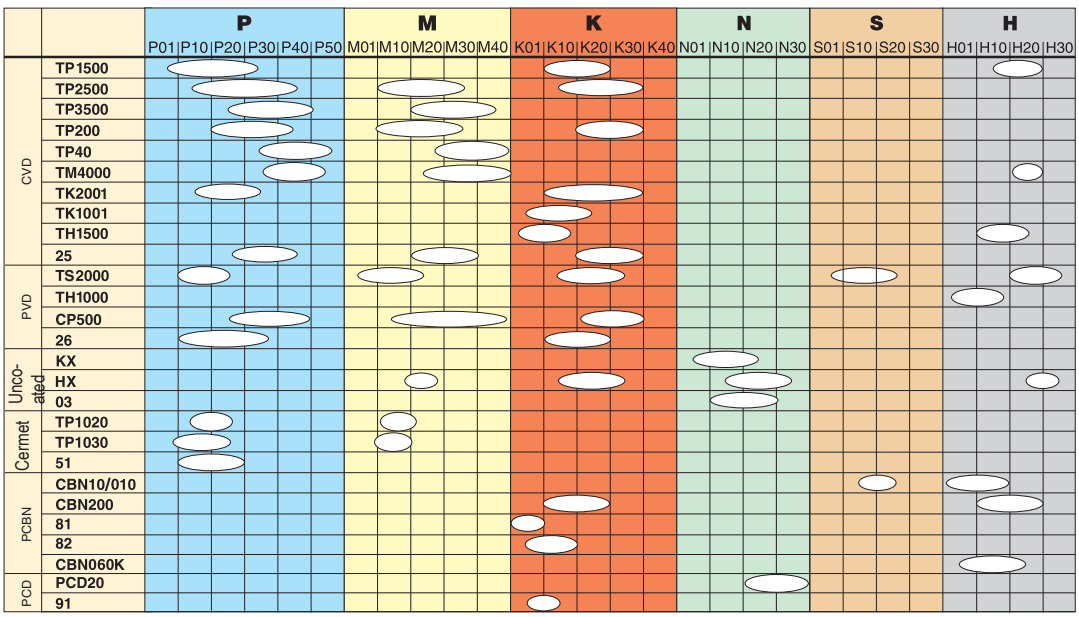

CVD coated grades recommended for boring

	TP1500	TP1500 is intended for boring of steel and alloyed steel. The high wear resistance offers high speed capability. Ti(C,N) + Al_2O_3 DURATOMIC®
	TP2500	TP2500 is intended for a wide range of boring applications in both steel and stainless steel and is also a good choice for cast iron. The wear resistance and edge strength together with the high versatility make the grade the first choice in a large number of applications. Ti(C,N) + Al_2O_3 DURATOMIC®
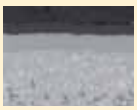	TP3500	TP3500 is intended for boring operations where the primary demand is toughness and reliability in machining steels and stainless steels. Ti(C,N) + Al_2O_3 DURATOMIC®
	TP200	TP200 is a universal grade with high versatility. The grade is intended for a wide range of turning applications in both steel and stainless steel and is also a good choice for cast iron. Ti(C,N) + Al_2O_3 + TiN
	TP40	TP40 is the basic grade for turning in the P40 range. Very tough grade for demanding operations on steel castings and forging, and on all types of stainless steel. TiC/Ti(C,N) + TiN
	TM4000	TM4000 is intended for machining of stainless steel. The wear resistance together with the superior edge toughness make the grade the first choice in stainless steel applications. Ti(C,N) + Al_2O_3 DURATOMIC®
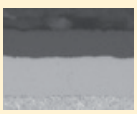	TK1001	DURATOMIC® technology coated grade. A extremely wear resistant optimized grade choice for machining of grey cast iron and easier ductile cast irons. Ti(C,N) + Al_2O_3
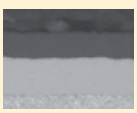	TK2001	DURATOMIC® technology coated grade. A highly wear resistant grade for cast irons in general as well as in steels and the grade is particularly capable in machining of ductile (nodular) cast irons also in more demanding setups and interupted cuts. Ti(C,N) + Al_2O_3
	TH1500	DURATOMIC® technology coated grade. An extremetly hard super micrograin grade intended for machining of partly hardened steels and provide an alternative for cast iron finishing. Ti(C,N) + Al_2O_3
	25 (EPB)	Universal grade. The grade is intended for a wide range of boring applications in steel, stainless steel and cast iron. Good combination of wear resistance and toughness. Ti (C, N) + Al2O3.

PVD coated grades recommended for boring

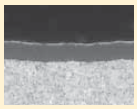	TS2000	Hard micrograin principally intended for finishing operations in superalloys and titanium alloys. Also performs well in finishing operations on stainless steel. (Ti,Al)N + TiN
	CP500 & 26 (EPB)	A very tough micrograin intended for finishing and medium roughing of stainless steel. Can handle intermittent cutting operations very well. CP500 is also an alternative for aluminium alloys. (Ti,Al)N + TiN
	TH1000	Very hard supermicrograin grade intended for partly hardened steel components as well as generally workpiece materials such as superalloys and due to remarkable edge toughness it also provides high performance in interupted cuts and hard-surface removal.

Uncoated grades recommended for boring

	KX & 03 (EPB)	Micrograin intended for machining aluminium and other non-ferrous materials.
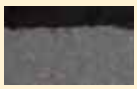	HX	Universal uncoated grade intended for machining of cast iron and hardened steels useful also in non-ferrous materials.

Cermet recommended for boring

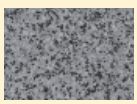	TP1020	Cermet with very high wear resistance intended for highest surface finish requirements with predictability and control in steel and stainless steel.
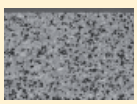	TP1030	PVD-coated Cermet with very high wear resistance intended for high surface finish and productivity requirements with predictability in steel and stainless steel mainly. Ti-Al-Si-N nanolaminate coating.
	51 (EPB)	Cermet with very high wear resistance. Intended for finishing operations on steels, in which strict demands are made on surface finish.

CBN and PCD grades recommended for boring

	82 (EPB)	CBN, cubic boron nitride grade for fine boring in grey cast iron. Grade with high strength and wear resistance.
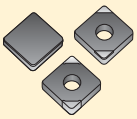	CBN010	Format: Solid, full-face brazed layer and brazed tips (single and double sided). Composition: 50% CBN content grade with an average grain size of 2 µm and a TiC ceramic binder. Coating: No coating.
	CBN10 & 81 (EPB)	CBN, Cubic boron nitride grade, for light continuous to moderate interrupted cuts. Intended for fine boring in hardened steel and in superalloys.
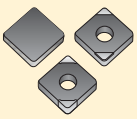	CBN060K	Solid, brazed tips (single and double sided) or sintered layer First choice for continuous to moderate interrupted cuts in hardened steel (a_p < 0.020 inch). New (Ti,Si,Al)N PVD coating developed for high speed machining. New unique superalloy binder.
	CBN200	CBN, Cubic boron nitride grade, for finishing of pearlitic cast iron, and sintered iron.
	PCD20 & 91 (EPB)	PCD, polycrystalline diamond, for boring in aluminium and Al-alloys, copper, brass, bronze and synthetic materials.

Inserts, recommended for fine boring, with cutting data

Part No.	Uncoated	Coated								Cermet			CBN						PCD		Cutting data*	
	03G3	TP1500	TS2000	TK2001	CP500	26G6	TH1000	TH1500	L-UX CP500	51G1	TP1020	TP1030	CBN010	CBN10	CBN060K	CBN200	81B1	82B2	PCD20	91J3	Depth of cut a_p (mm)	Feed f (mm/rev)
CCGT 060200	■									■											0,01-0,3	0,03-0,15
CCGT 0602005-F1					■																	
CCGT 060201-F1					■																	
CCGT 060202	■					■				■												
CCGT 060204	■					■			■	■												
CCMT 060202-F1		■	■	■	■						■	■										
CCMT 060204-F1		■	■		■		■	■			■	■										
CCMW 060202																	■					
CCMW 060202F-L1																			■			
CCMW 060204F-L1																			■			
CCMW 060204E-L0-B																■						
CCGW 060202S-01020-LF																■						
CCGW 060204S-01020-LF													■	■		■						
CCGW 060204E-L1-B													■									
CCGT 09T301-F1					■																	
CCGT 09T302	■					■				■												
CCGT 09T304	■					■			■	■												
CCMT 09T302-F1		■			■						■	■										
CCMT 09T304-F1		■	■	■	■		■				■	■										
CCMT 09T308-F1		■	■	■	■							■										
CCMW 09T304F-L1																			■			
CCMW 09T308F-L1																			■			
CCMW 09T308E-L0-B														■								
CCMW 09T304E-L1-B																■						
CCMW 09T308E-L1-B																■						
CCGW 09T304E-L1-B													■									
CCGW 09T304S-01020-LF																■						
CCGW 09T308S-01020-LF																■						
TCGT 110202									■													
TCGT 110204	■								■	■												
TCGT 110201-F1					■																	
TCMT 110202-F1					■																	
TCMT 110204-F1		■			■																	
TCMT 110208-F1		■			■																	
TCMW 110204S-L1-C																■						
TCMW 110208S-L1-C																■						
TCGW 110204E-L1-C													■									
TCGW 110208E-L1-C													■									
TCGW 110204S-01020-LF																■						
TCGW 110208S-01020-LF																■						
TCMW 110202F-L1																			■			
TCMW 110204F-L1																			■			
WBGT 030100	■									■												
WBGT 030102	■									■												
WBGW 030102																	■			■		
WBGW 030102E-L-LF															■	■						
WBGT 030102L					■																	

* For recommended cutting speeds, see pages 596-597. Please check availability in current price and stock-list.

CCGT	CCGT-UX	CCMT-F1/CCGT-F1	CCMW-L0	CCMW/GW-L0-B/L1-B	CCGW-LF	TCGT/TCMT-UX
						
TCMW-L0	**TCMW/GW-L0-C/L1-C**	**TCGW-LF**	**WBGT**	**WBGW-LF**	**WBGW**	
						

Inserts, recommended for rough boring, with cutting data

Part No Example: CPGT050204 03D3	Uncoated			Coated								Cutting data*	
	Ground flank and pressed chipbreaker			Pressed chipbreaker							Ground flank and direct chipbreaker, left hand cutting	Max. depth of cut a_p (mm)	Feed f_z (mm/tooth)
	KX	HX	03D3	TP2500	TP3500	TP40	TM4000	25C4	TP200	TK2001	L-UX CP500		
CPGT 050204			■					■				2	0,05-0,2
CCMT 060204-F1				■	■	■	■			■		2,5	0,05-0,25
CCMT 060204-F2		■		■	■	■	■			■		2,5	0,05-0,25
CCGT 060204											■	2,5	0,05-0,25
CCGT 060204F-AL	■											2,5	0,05-0,25
CCMT 060204-M3										■		2,5	0,05-0,3
CCMT 09T308-F1				■	■	■	■			■		4	0,1-0,3
CCMT 09T308-F2				■	■	■	■			■		4	0,1-0,3
CCGT 09T304											■	4	0,1-0,3
CCGT 09T308F-AL	■											4	0,1-0,3
CCMT 120408-F1				■	■					■		4	0,15-0,4
CCMT 120408-F2				■	■	■	■			■		5	0,15-0,4
CCGT 120408											■	5	0,15-0,4
CCGT 120408F-AL	■											5	0,15-0,4
SCMT 060204-F2				■		■						2,5	0,05-0,25
SCMT 09T308-F1				■	■					■		2,5	0,1-0,3
SCMT 09T308-F2				■	■	■	■			■		4	0,1-0,3
SCMT 120408-F1				■	■					■		4	0,15-0,4
SCMT 120408-F2				■	■	■	■			■		5	0,15-0,4
TCMT 16T308-F1				■	■	■	■			■		5	0,15-0,4
TCMT 16T308-F2				■	■	■	■			■		4	0,15-0,4
TCGT 16T308F-AL	■											4	0,15-0,4
CCMT 160508-F2				■			■		■	■		7	0,2-0,5
CCMT 160512-F2							■		■			7	0,2-0,5
SCMT 150512-F2						■						7	0,2-0,5
SCGX 150512-P2												7	0,2-0,5
TCMT 220408-F2				■	■				■			7	0,2-0,5

Please check availability in current price and stock-list.
*** For recommended cutting speeds, see page 596-597.**

CPGT	CCMT-F1	CCMT-F2	CCMT-M3	CCGT-UX	CCGT-AL
					
SCMT-F1	**SCMT-F2**	**TCMT-F1**	**TCMT-F2**	**TCGT-AL**	
					

CN.. inserts, recommended for rough boring (double sided), with cutting data

Part No. Example: CNMG120408-M3 TK2000	Uncoated		Coated								Cutting data*	
	Ground flank and pressed chipbreaker	Ground flank and pressed chipbreaker	Pressed chipbreaker							Ground flank and pressed chipbreaker, left hand cutting	Max. depth of cut a_p (mm)	Feed f_z (mm/tooth)
	KX	03D3	TP1500	TP3500	TP40	TM4000	25C4	TP200	TK2000	L-UX CP500		
CNMG 120408-M3									■		4,5	0,25-0,35
CNMG 120408-MF3				■					■		4,5	0,25-0,35
CNMG 120408-MF4				■		■					4,5	0,25-0,35
CNMG 120408-M5				■	■	■			■		4,5	0,25-0,35
CNMG 120408-MF1						■					4,5	0,25-0,35
CNMG 120408-MR7									■		4,5	0,25-0,35

* For recommended cutting speeds, see page 596-597.

Please check availability in current price and stock-list.

CNMG-M3	CNMG-MF3	CNMG-MF4	CNMG-M5	CNMG-MF1	CNMG-MR7
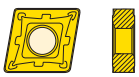	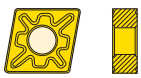				

WARNING:
When using CN.. inserts it is important to use the recommended inserts and cutting data. Using other inserts and incorrect cutting data could result in high cutting stresses and machine/workpiece damage.

Recommended cutting speeds for boring (related to workpiece material and insert grade)

	V_c											
SMG	KX & HX	03	TP40	TM4000	TP1500	TP2500	TP3500	TK1001	TK2001	TH1000	TH1500	CP500
P1			60-180		60-350	60-250	60-230					80-200
P2			60-180		60-350	60-250	60-230					80-200
P3			60-180		60-350	60-250	60-230					80-200
P4			60-180		60-350	60-250	60-230					80-200
P5			60-150		60-300	60-250	60-230					80-200
P6			60-140		60-300	60-230	60-200					80-180
P7			60-140		60-300	60-230	60-200					80-160
P8			60-120		60-250	60-230	60-200					80-130
P11			60-120		60-300	60-250	60-200					80-180
M1			60-130	60-180	100-200	60-200	60-200					60-160
M2			60-130	60-180	100-200	60-200	60-200					60-160
M3			60-120	60-170	100-180	60-200	60-200					60-150
M4			60-110	60-160	100-180	60-190	60-190					60-150
M5			60-110	60-150	100-180	60-180	60-180					60-150
K1			60-140		100-250		60-180	60-230	60-230			60-160
K2			60-140		100-250		60-180	60-230	60-230			60-160
K3			60-140		100-250		60-180	60-230	60-230			60-160
K4			60-140		100-250		60-180	60-200	60-200			60-160
K5			60-140		100-250		60-180	60-200	60-200			60-160
K6			60-130		100-250		60-180	60-200	60-200			60-160
K7			60-130		100-250		60-180	60-200	60-200			60-160
N1	150-800	150-800										150-800
N2	150-800	150-800										150-800
N3	150-500	150-500										150-500
N11	150-400	150-400										150-400
S1	20-50	20-50										20-50
S2	20-50	20-50										20-50
S3	20-50	20-50										20-50
S11	20-50	20-50										20-50
S12	20-50	20-50										20-50
S13	20-50	20-50										20-50
H3										50-150	50-150	
H5										50-140	50-140	
H7										50-150	50-150	
H8										30-130	30-130	
H11										30-120	30-120	
H12										30-120	30-120	
H21												
H31												

SMG = Seco material group
v_c= m/min
All cutting data are start values

Recommended cutting speeds for boring (related to workpiece material and insert grade)

SMG	V_c												
	26	25	TS2000	TP10020	TP1030	51	CBN10/ CBN010	81	CBN200	82	PCD20	91	Axiabore
P1	80-200	60-180		100-350	100-350	100-350							80-250
P2	80-200	60-180		100-350	100-350	100-350							80-250
P3	80-200	60-180		100-350	100-350	100-350							80-250
P4	80-200	60-180		100-350	100-350	100-350							80-250
P5	80-200	60-180		100-350	100-350	100-350							70-230
P6	80-180	60-160		100-300	100-300	100-300							70-230
P7	80-160	60-160		100-250	100-250	100-250							70-230
P8	80-130	60-130		100-250	100-250	100-250							70-200
P11	80-180	60-150		100-300	100-300	100-300							70-200
M1	60-160	60-140	60-200	80-200	80-200	80-200							60-200
M2	60-160	60-140	60-200	80-200	80-200	80-200							60-200
M3	60-150	60-130	60-200	80-200	80-200	80-200							60-180
M4	60-150	60-120	60-180	80-180	80-180	80-180							60-170
M5	60-150	60-120	60-180	80-180	80-180	80-180							60-170
K1	60-160	60-160		100-250	100-250	100-250			300-1000	300-1000			60-150
K2	60-160	60-160		100-250	100-250	100-250			300-1000	300-1000			60-150
K3	60-160	60-160		100-250	100-250	100-250			300-1000	300-1000			60-150
K4	60-160	60-160		100-250	100-250	100-250			300-1000	300-1000			60-130
K5	60-160	60-160		100-250	100-250	100-250							50-100
K6	60-160	60-160		100-180	100-180	100-180							50-100
K7	60-160	60-160		100-180	100-180	100-180							50-100
N1	150-800										300-1500	300-1500	200-800
N2	150-800										300-1500	300-1500	200-800
N3	150-500										200-800	200-800	200-800
N11	150-400										180-800	180-800	200-800
S1	20-50		20-80										20-60
S2	20-50		20-80										20-60
S3	20-50		20-80										60-50
S11	20-50		20-80										20-50
S12	20-50		20-80										20-50
S13	20-50		20-80										20-50
H3							80-180	80-180					
H5							80-200	80-200					
H7							80-150	80-150					
H8							80-150	80-150					
H11													
H12													
H21													
H31													

SMG = Seco material group
v_c= m/min
All cutting data are start values

Insert locking keys and screws of all boring insert holders, tools and cartridges

Specific clamp spare parts for CN.. inserts are shown in the CN.. type insert holders product page. Insert clamp spare parts for insert holders EPB 610 are shown in the insert holders for heads EPB 610 page.
Reminder: Spare parts are part of the original delivery content of insert holders, tools or cartridges.
Accessories are not included in the delivery content, to be ordered separately.

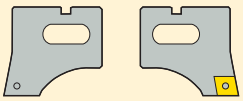

		Accessories		Spare parts	
		Torx driver for insert locking screw*		Insert locking screw	
					
For rough boring insert holders	For insert size	Part No.	Torx Plus	Part No.	Torx Plus
	CP...0502	T07P-3	07	C02245-T07P	07
	CC...0602	T07P-3	07	C02504-T07P	07
	CC...09T3	T15P-3	15	C04008-T15P	15
	CC...1204	T15P-3	15	C05012-T15P	15
	CC...1605	T15P-3	15	C05012-T15P	15
	SC...0502	T07P-3	07	C02245-T07P	07
	SC...0602	T07P-3	07	C02504-T07P	07
	SC...09T3	T15P-3	15	C04008-T15P	15
	SC...1204	T15P-3	15	C05012-T15P	15
	SC...1505	T15P-3	15	C05012-T15P	15

* One Torx driver is delivered with each rough boring head.

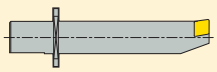

		Accessories		Spare parts	
		Torx driver for insert locking screw		Insert locking screw	
					
For Axiabore™ type tools	For insert size	Part No.	Torx Plus	Part No.	Torx Plus
	WB...0301...	T06P-3	06	C02035-T06P	06
	CC...0602...	T07P-3	07	C02504-T07P	07
	–	T15P-3	15	C04008-T15P	15

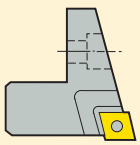

		Spare parts			
		Torx driver for insert locking screw		Insert locking screw	
					
For fine boring insert holders, chamfering insert holders and back boring insert holders	For insert size	Part No.	Torx Plus	Part No.	Torx Plus
	WB...0301...	T06P-2	06	C02035-T06P	06
	CC...0602...	T07P-3	07	C02504-T07P	07
	CC...09T3...	T15P-3	15	C04008-T15P	15
	TC...1102...	T07P-3	07	C02504-T07P	07

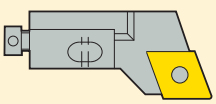

		Accessories		Spare parts	
		Torx driver for insert locking screw		Insert locking screw	
					
For cartridges	For insert size	Part No.	Torx Plus	Part No.	Torx Plus
	CC...16...	T15P-2	15	C05012-T15P	15
	SC...15...	T15P-2	15	C05012-T15P	15
	TC...16...	T15P-2	15	C03509-T15P	15
	TC...22...	T15P-2	15	C05012-T15P	15

Suitable holders for boring heads

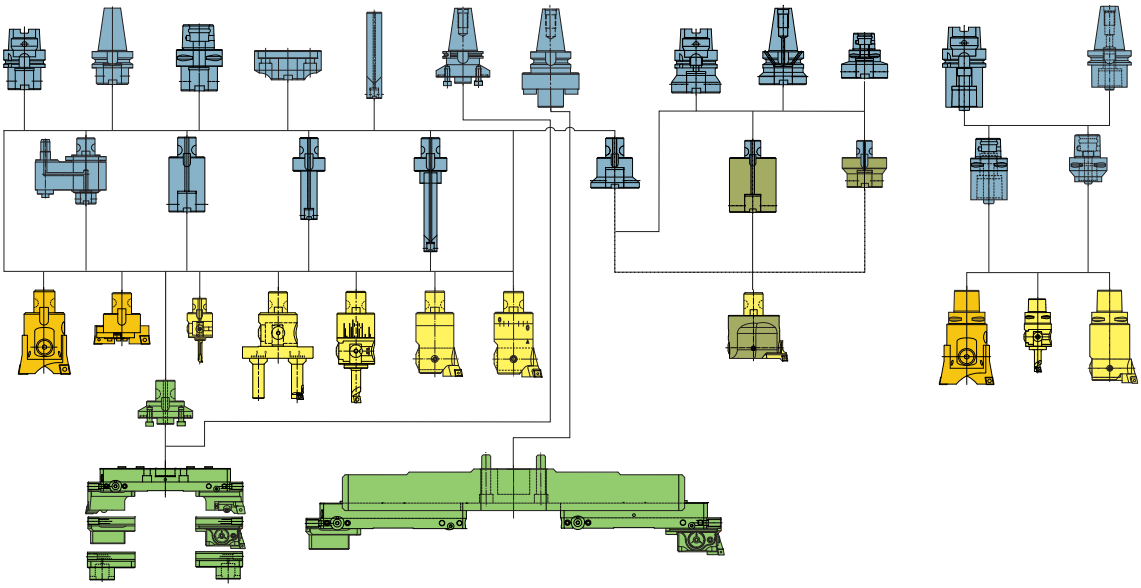

The EPB boring heads have a Graflex® or a Seco-Capto™ connection shank

The boring heads can be used on any machine type, using the suitable Graflex® arbor (HSK, DIN, BT, ANSI, Seco-Capto™).
All bore lengths can be reached by selecting the required Graflex® intermediate, e.g. the extra-long ones with extension section in carbide.

Highest assembly rigidity is obtained by selecting the longest and widest arbor possible, then completing with smaller intermediates.
The Graflex® and Seco-Capto™ connections guarantees a unique orientation of the boring heads, achieving a cutting edge orientation according to ISO.
Easy assembly of Graflex® modules by the side clamping principle.

For classic boring heads (steel), select the classic Graflex® and Seco-Capto™ arbors and intermediates from the TOOLING SYSTEMS catalogue.

For Liteline™ boring heads (aluminium), select the suitable Liteline™ arbors, intermediates and adapters from pages 579-586.
For Bridge bars, see Graflex® adapters and direct holders page 562.
Note: Jumbo Bridge bars are designed to be held on milling cutter holders or to be fitted directly on a machine's spindle front.

Locking advice for Graflex® classic connection shanks G. on boring heads (using a tenon with stop screw).

For boring, no need to tighten the tenon's stop screw, as the connection's self locking action is allowed.
For rough boring in heavy duty, we recommend to apply the 'high value' torques for the Graflex® ball nose screws.

See also the detailed 'Graflex® connection assembly procedure' in the TOOLING SYSTEMS catalogue.

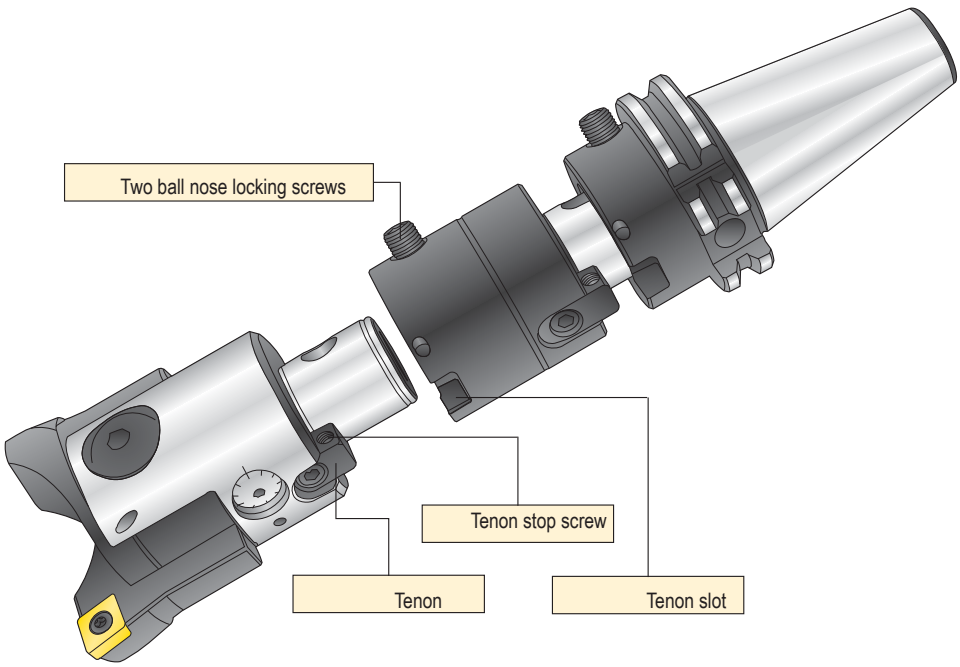

Spare parts for the Graflex® classic connection shanks G. of boring heads



- The tenon kit comprises a tenon with its locking screw and the integrated stop screw.
- See separate page for Liteline™ boring head shanks G.A and G.B

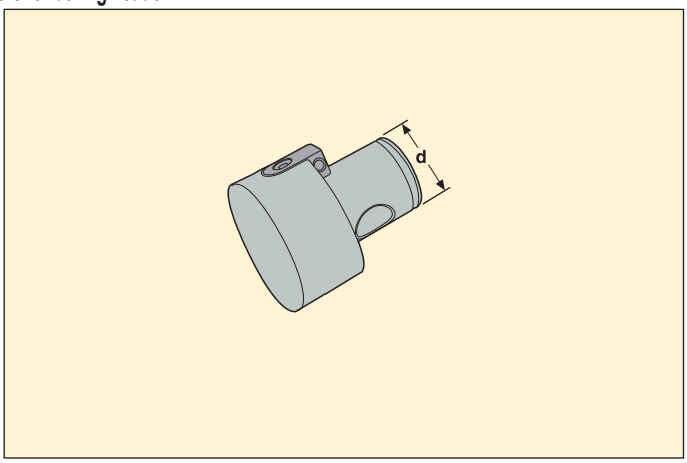

Spare parts	Description	Part No.	For Graflex shank connection		For boring head
			Shank size	d mm	
Spare parts standard					
	Tenon kit	**90M0**	G0	08	A75000/ A78009
	Tenon kit	**90M1**	G1	11	A78010
	Tenon kit	**90M2**	G2	14	A78020/ A79020
	Tenon kit	**90M3**	G3	18	A78030/ A79030
	Tenon kit	**90M4**	G4	22	A78040/ A79040
	Tenon kit	**90M5**	G5	28	A78050
	Tenon kit	**90M6**	G6	36	A78060/ A79060
	Tenon kit	**90M7**	G7	46	A78070/ A731200
Spare parts dedicated					
	Thin tenon kit	**90M01**	G0	08	A78008
	Short tenon kit	**90M11**	G1	11	A75010
	Short tenon kit	**90M21**	G2	14	A75020/ A76001
	Short tenon kit	**90M31**	G3	18	A75030
	Short tenon kit	**90M41**	G4	22	A75040
	Short tenon kit	**90M51**	G5	28	A75050/ A79050
	Short tenon kit	**90M61**	G6	36	A75060
	Short tenon kit	**90M71**	G7	46	A75070
	Frontal tenon kit	**90M3A**	G3	18	A76002/A76012
	Frontal tenon kit	**90M5A**	G5	28	A76003
	Frontal tenon kit	**90M5A1**	G5	28	A76013

Please check availability in current price and stock-list

Locking advice for Graflex® Liteline™ connection shanks G.A/B on boring heads (using an expandable tenon)

The Liteline™ modules with Graflex® back end sizes (G5A, G6A, G6B, G7A) are equipped with an expandable split tenon.
The assembly procedure shown below, fixing the tightening orders and locking torques, guarantees the optimum connection performance:

1. Assemble the modules using the tenon for easy orientation.
2. Orientate the modules ensuring that the left face of the tenon contacts the left face of the tenon slot.
3. Lightly tighten ball nose screw (1).
4. Lightly tighten ball nose screw (2).
5. 'Torque' tenon's expanding screw (3).
6. 'Torque' ball nose screw (1).
7. 'Torque' ball nose screw (2).
8. Double check tenon's expanding screw (3) tightening torque.

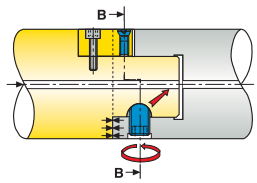

Fig. A

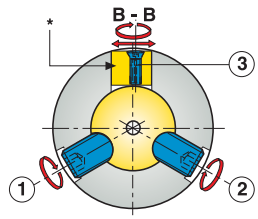

Fig. B
viewed from the front.
* Tenon's left face.

Graflex® connections G.A or G.B, dimensions and recommended locking torques

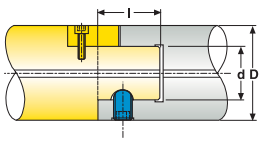

Graflex® connection	d mm	D mm	l mm	Recommended locking torques	
				Ball nose screws (1) & (2)	Tenon expanding screw (3)
G5A	28	55	30	17 Nm	4,5 Nm
G6A	36	70	40	23 Nm	5 Nm
G6B	36	100	40	23 Nm	5 Nm
G7A	46	120	50	40 Nm	5 Nm

Accessories and Spare Parts for the Graflex® connections G.A or G.B

Accessories (locking keys) and spare parts (two ball nose screw kits or tenon kits) are shown on page 604.

Locking advice for Seco-Capto™ connection shanks C. on boring heads: No specific advice. For boring heads, the general instructions are applicable, see below.

Tightening torques for Seco-Capto™ receivers connections with centre bolt clamping (Basic Holders, Intermediates)

Seco-Capto size	Centre bolt tightening torque (Nm)
C3	40-50
C4	50-60
C5	90-100
C6	160-180
C8	160-180

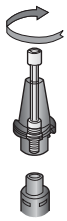

Tightening torques for Seco-Capto™ receivers connections with segment clamping, actuated by cam shaft side locking (Flange Mounts)

Seco-Capto size	Cam tightening torque (Nm)
C3	35
C4	50
C5	70
C6	90
C8	130

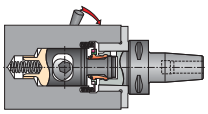

The Seco-Capto™ joint features a self-locking taper. Where the centre bolt system is used, unscrew the centre bolt until the bolt head makes contact with the tool holder, causing the bolt to force the taper joint apart. When using the cam shaft side clamping system, over untightening of the cam will force the taper joint apart.

Spare parts and accessories for the Graflex® connections shanks G.A/B of Liteline™ boring heads and holders



- Expandable tenon for Graflex® shanks G.A or G.B.
- Ball nose screws for Graflex® receivers G.A or G.B.

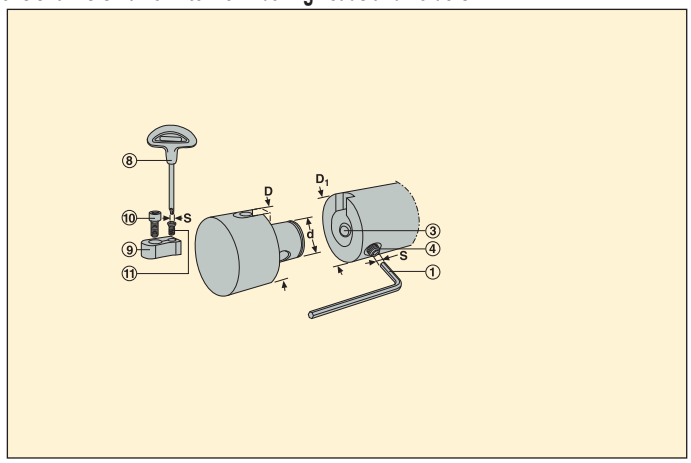

Spare parts and Accessories for Graflex connection	Description	For Graflex connection				Part No.	S
		Receiver size	Shank size	d mm	D or D_1 mm		
Spare parts							
	Expanding screw for tenon (11)		G5A	28	55	**C04510-T20P**	–
	Expanding screw for tenon (11)		G6A/ G6B	36	70/ 100	**C05010-T20P**	–
	Expanding screw for tenon (11)		G7A	46	120	**C05010-T20P**	–
	Tenon kit (9)+(10)+(11)		G5A	28	55	**90M5L**	–
	Tenon kit (9)+(10)+(11)		G6A/ G6B	36	70/ 100	**90M6L**	–
	Tenon kit (9)+(10)+(11)		G7A	46	120	**90M7L**	–
	Two ball nose screws kit (3) + (4)	G5A		28	55	**90F5**	–
	Two ball nose screws kit (3) + (4)	G6A/ G6B		36	70/ 100	**90F6**	–
	Two ball nose screws kit (3) + (4)	G7A*		46	120	**90F7**	–
	Two short ball nose screws kit (3) + (4)	G7A*		46	120	**90F71**	–
Accessories							
	Torx driver for expanding screw (8)**		G5A	28	55	**T20P-4**	20
	Torx driver for expanding screw (8)**		G6A/ 6B	36	70/ 100	**T20P-4**	20
	Torx driver for expanding screw (8)**		G7A	46	120	**T20P-4**	20
	Hex locking key (1)	G5A		28	55	**03H05**	5
	Hex locking key (1)	G6A/6B		36	70/ 100	**03H06**	6
	Hex locking key (1)	G7A		46	120	**03H10**	10

Please check availability in current price and stock-list

* Kit 90F7 is for all G7A connection receivers except for arbor EM3471 401 46A60 (DIN50) requiring Kit 90F71.

** One driver (8) is part of delivery content of Graflex® Liteline™ boring heads.

Threaded holes – hole size
Metric ISO threads and inch threads

Tap threading – Thread milling					
Thread	Inch sizes	Pitch	Hole Ø	Tolerance minimum	Tolerance maximum
M2	–	0,4	1,60	1,570	1,670
M2,5	–	0,45	2,05	2,015	2,130
–	UNC4-40	–	2,35	2,160	2,380
M3	–	0,5	2,50	2,470	2,590
–	UNC5-40	–	2,65	2,490	2,690
–	UNC6-32	–	2,85	2,645	2,890
M3,5	–	0,6	2,90	2,850	3,000
M4	–	0,7	3,30	3,250	3,400
–	UNC8-32	–	3,50	3,350	3,530
M4,5	–	0,75	3,70	3,690	3,870
–	UNC10-24	–	3,90	3,685	3,960
M5	–	0,8	4,20	4,140	4,330
–	UNC12-24	–	4,50	4,350	4,590
M6	–	1	5,00	4,920	5,150
–	UNC1/4-20	–	5,10	4,980	5,260
M7	–	1	6,00	5,980	6,260
–	NPT1/16	–	6,15	6,200	TAPER 1:16
–	UNC5/16-18	–	6,60	6,415	6,730
M8	–	1,25	6,80	6,650	6,910
–	UNC3/8-16	–	8,00	7,810	8,160
–	NPT1/8	–	8,40	8,500	TAPERI 1:16
M10	–	1,5	8,50	8,380	8,675
–	G1/8	–	8,80	8,570	8,840
–	UNC7/16-14	–	9,40	9,150	9,550
M12	–	1,75	10,20	10,110	10,440
–	UNC1/2-13	–	10,80	10,590	11,010
–	NPT1/4	–	11,10	11,100	TAPER 1:16
–	G1/4	–	11,80	11,445	11,890
M14	–	2	12,00	11,835	12,210
–	UNC5/8-11	–	13,50	13,380	13,860
M16	–	2	14,00	13,835	14,210
–	NPT3/8	–	14,30	14,550	TAPER 1:16
–	G3/8	–	15,25	14,950	15,395
M18	–	2,5	15,50	15,295	15,740
M20	–	2,5	17,50	17,295	17,740
–	NPT1/2	–	17,90	18,000	TAPER 1:16
–	G1/2	–	19,00	18,635	19,170
M22	–	2,5	19,50	19,300	19,740
–	G5/8	–	21,00	20,590	21,120
M24	–	3	21,00	20,760	21,250
–	NPT3/4	–	23,20	23,250	TAPER 1:16
M27	–	3	24,00	23,760	24,250
–	G3/4	–	24,50	24,120	24,650
M30	–	3,5	26,50	26,380	26,670
–	G7/8	–	28,25	27,880	28,415
–	NPT1	–	29,00	29,200	TAPER 1:16
M33	–	3,5	29,50	28,706	29,211
–	G1	–	30,75	30,300	30,930
M36	–	4	32,00	31,670	32,270
M39	–	4	35,00	34,093	35,670
–	G1,1/8	–	35,50	34,940	35,580
M42	–	4,5	37,50	37.220	37,799
–	G1,1/4	–	39,50	38,960	39,590
–	G1,1/2	–	45,25	44,845	45,485

Threaded holes – hole size
Metric ISO threads and inch threads

Rolled taps (fluteless taps)					
Thread	Inch sizes	Pitch	Hole Ø	Tolerance minimum	Tolerance maximum
M3	–	0,5	2,80	2.78	2.82
M3,5	–	0,6	3,25	3.22	3.28
M4	–	0,7	3,70	3.67	3.73
MF5	–	0,5	4,80	4.78	4.82
M5	–	0,8	4,65	4.62	4.68
M6	–	1	5,55	5.52	5.58
MF6X0,75	–	0,75	5,65	5.62	5.68
MF7	–	0,75	6,65	6.62	6.68
M7	–	1	6,55	6.52	6.58
MF8	–	0,75	7,65	7.62	7.68
MF8	–	1	7,55	7.52	7.58
M8	–	1,25	7.45	7.41	7.49
MF10	–	1	9,55	9.52	9.58
MF10	–	1,25	9.45	9.41	9.49
M10	–	1,5	9.35	9.31	9.39
MF12	–	1	11,55	11.52	11.58
MF12	–	1,25	11,45	11.41	11.49
MF12	–	1,5	11,35	11.31	11.39
M12	–	1,75	11,20	11.15	11.25
MF14	–	1	13,55	13.52	13.58
MF14	–	1,25	13,45	13.41	13.49
MF14	–	1,5	13,35	13.31	13.39
M14	–	2	13,10	13.05	13.15
MF16	–	1,5	15,35	15.31	15.39
M16	–	2	15,10	15.05	15.15
M20	–	2,5	18,90	18.85	18.95
M24	–	3	22,65	22.60	22.70

Threaded holes – hole size
Metric ISO threads and inch threads

Tap threading – Thread milling – Fine threads					
Thread	**Inch sizes**	**Pitch**	**Hole Ø**	**Tolerance minimum**	**Tolerance maximum**
MF4X0,5	–	0,5	3,50	3,459	3,599
–	UNF8-36	–	3,5	3,404	3,607
–	UNF10-32	–	4,1	3,962	4,166
MF5X0,5	–	0,5	4,50	4,459	4,599
MF6X0,75	–	0,75	5,20	5,188	5,378
–	UNF1/4-28	–	5,5	5,367	5,580
–	NPTF1/16	–	6,10	6,200	TAPER 1:16
–	UNF5/16-24	–	6,9	6,792	7,038
MF8X1	–	1	7,00	6,917	7,153
MF8X0,75	–	0,75	7,20	7,188	7,378
–	NPTF1/8	–	8,40	8,500	TAPER 1:16
MF10X1,25	–	1,25	8,80	8,647	8,912
MF10X1	–	1	9,00	8,917	9,153
MF10X0,75	–	0,75	9,20	9,188	9,378
–	UNF7/16-20	–	9,9	9,738	10,030
MF12X1,5	–	1,5	10,50	10,376	10,676
MF12X1,25	–	1,25	10,80	10,647	10,912
MF12X1	–	1	11,00	10,917	11,153
–	NPTF1/4	–	11,00	11,000	TAPER 1:16
–	UNF1/2-20	–	11,5	11,326	11,618
MF14X1,5	–	1,5	12,50	12,376	12,676
MF14X1,25	–	1,25	12,80	12,647	12,912
MF14X1	–	1	13,00	12,917	13,153
–	NPTF3/8	–	14,30	14,500	TAPER 1:16
MF16X1,5	–	1,5	14,50	14,376	14,676
–	UNF5/8-18	–	14,5	14,348	14,671
MF16X1	–	1	15,00	14,917	15,153
MF18X1,5	–	1,5	16,50	16,376	16,676
MF18X1	–	1	17,00	16,917	17,153
–	NPTF1/2	–	17,60	17,800	TAPER 1:16
MF20X1,5	–	1,5	18,50	18,376	18,676
MF20X1	–	1	19,00	18,917	19,153
MF22X1,5	–	1,5	20,50	20,376	20,676
MF24X2	–	2	22,00	21,835	22,210
MF24X1,5	–	1,5	22,50	22,376	22,676
–	NPTF3/4	–	23,00	23,100	TAPER 1:16
MF25X1,5	–	1,5	23,50	23,376	23,676
MF26X1,5	–	1,5	24,50	24,376	24,676
MF27X2	–	2	25,00	24,835	25,210
MF27X1,5	–	1,5	25,50	25,376	25,676
MF28X1,5	–	1,5	26,50	26,376	26,676
MF30X2	–	2	28,00	27,835	28,210
MF30X1,5	–	1,5	28,50	28,376	28,676

ISO Standard tolerance for hole and shaft – Axle tolerances

Axle tolerance position is denominated with **small letters**

Bore tolerance position is denominated with **CAPITAL LETTERS**

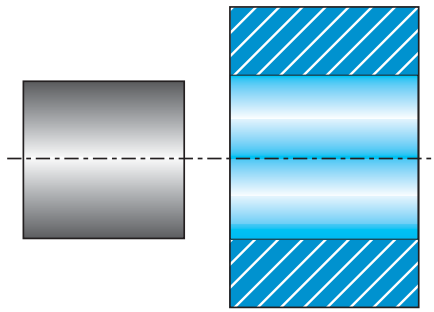

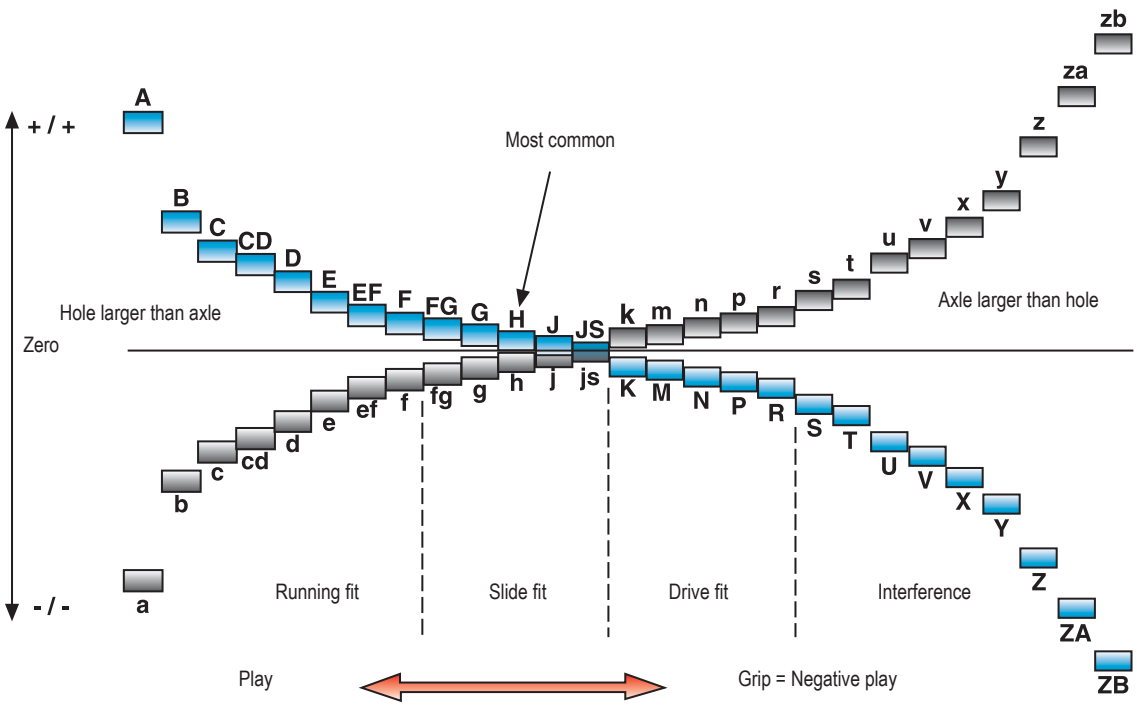

ISO tolerance table

ISO tolerances for holes (mm)													
Hole dia (mm)	D10	E9	F7	F8	G7	G9	H6	H7	H8	H9	H10	H11	H12
≤ 3	+60 +20	+39 +14	+16 +6	+20 +6	+12 +2	+27 +2	+6 0	+10 0	+14 0	+25 0	+40 0	+60 0	+100 0
3 ≥ 6	+78 +30	+50 +20	+22 +10	+28 +10	+16 +4	+34 +4	+8 0	+12 0	+18 0	+30 0	+48 0	+75 0	+120 0
6 ≥ 10	+98 +40	+61 +25	+28 +13	+35 +13	+20 +5	+41 +5	+9 0	+15 0	+22 0	+36 0	+58 0	+90 0	+150 0
10 ≥ 18	+120 +50	+75 +32	+34 +16	+43 +16	+24 +6	+49 +6	+11 0	+18 0	+27 0	+43 0	+70 0	+110 0	+180 0
18 ≥ 30	+149 +65	+92 +40	+41 +20	+53 +20	+28 +7	+59 +7	+13 0	+21 0	+33 0	+52 0	+84 0	+130 0	+210 0
30 ≥ 50	+180 +80	+112 +50	+50 +25	+64 +25	+34 +9	+71 +9	+16 0	+25 0	+39 0	+62 0	+100 0	+160 0	+250 0
50 ≥ 65	+220 +100	+134 +60	+60 +30	+76 +30	+40 +10	-	+19 0	+30 0	+46 0	+74 0	+120 0	+190 0	+300 0
65 ≥ 80													
80 ≥ 100	+260 +120	+159 +72	+71 +36	+90 +36	+47 +12	-	+22 0	+35 0	+54 0	+87 0	+140 0	+220 0	+350 0
100 ≥ 120													
120 ≥ 140	+305 +145	+185 +85	+83 +43	+106 +43	+54 +14	-	+25 0	+40 0	+63 0	+100 0	+160 0	+250 0	+400 0
140 ≥ 160													
160 ≥ 180													
180 ≥ 200	+355 +170	+215 +110	+96 +50	+122 +50	+61 +15	-	+29 0	+46 0	+72 0	+115 0	+185 0	+290 0	+460 0
200 ≥ 225													
225 ≥ 250													
250 ≥ 280	+400 +190	+240 +110	+108 +56	+137 +56	+69 +17	-	+32 0	+52 0	+81 0	+130 0	210 0	+320 0	+520 0
280 ≥ 315													
315 ≥ 355	+440 +210	+265 +125	+119 +62	+151 +62	+75 +18	-	+36 0	+57 0	+89 0	+140 0	+230 0	+360 0	+570 0
355 ≥ 400													

ISO tolerance table

ISO tolerances for holes (mm)												
Hole dia (mm)	**H13**	**JS7**	**JS9**	**K6**	**K7**	**M6**	**M7**	**N7**	**N9[1]**	**P7**	**P9**	**R7**
≤ 3	+140 0	+/-5	+/-12,5	0 -6	0 -10	-2 -8	-2 -12	-4 -14	-4 -29	-6 -16	-6 -31	-10 -20
3 ≥ 6	+180 0	+/-6	+/-15	+2 -6	+3 -9	-1 -9	0 -12	-4 -16	0 -30	-8 -20	-12 -42	-11 -23
6 ≥ 10	+220 0	+/-7,5	+/-18	+2 -7	+5 -10	-3 -12	0 -15	-4 -19	0 -36	-9 -24	-15 -51	-13 -28
10 ≥ 18	+270 0	+/-9	+/-21,5	+2 -9	+6 -12	-4 -15	0 -18	-5 -23	0 -43	-11 -29	-18 -61	-16 -34
18 ≥ 30	+330 0	+/-10,5	+/-26	+2 -11	+6 -15	-4 -17	0 -21	-7 -28	0 -52	-14 -35	-22 -74	-20 -41
30 ≥ 50	+390 0	+/-12,5	+/-31	+3 -13	+7 -18	-4 -20	0 -25	-8 -33	0 -62	-17 -42	-26 -88	-25 -50
50 ≥ 65	+460 0	+/-15	+/-37	+4 -15	+9 -21	-5 -24	0 -30	-9 -39	0 -74	-21 -51	-32 -106	-30 -62
65 ≥ 80												-32 -62
80 ≥ 100	+540 0	+/-17,5	+/-43,5	+4 -18	+10 -15	-6 -28	0 -35	-10 -45	0 -87	-24 -59	-37 -124	-38 -73
100 ≥ 120												-41 -76
120 ≥ 140	+630 0	+/-20	+/-50	+4 -21	+12 -28	-8 -33	0 -40	-12 -52	0 -100	-28 -68	-43 -143	-48 -88
140 ≥ 160												-50 -90
160 ≥ 180												-53 -93
180 ≥ 200	+720 0	+/-23	+/-57,5	+5 -24	+13 -33	-8 -37	0 -46	-14 -60	0 -115	-33 -79	+50 +165	-60 -106
200 ≥ 225												-63 -109
225 ≥ 250												-67 -113
250 ≥ 280	+810 0	+/-26	+/-65	+5 -27	+16 -36	-9 -41	0 -52	-14 -66	0 -130	-36 -88	-56 -186	-74 -126
280 ≥ 315												-78 -130
315 ≥ 355	+890 0	+/-28,5	+/-70	+7 -29	+17 -40	-10 -46	0 -57	-16 -73	0 -140	-41 -98	-62 -202	-87 -144
355 ≥ 400												-93 -150

Geometrical tolerance

	Drawing symbol	Tolerance area
Circularity	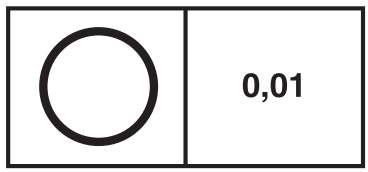	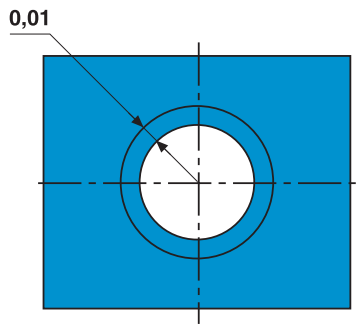
Cylindricity		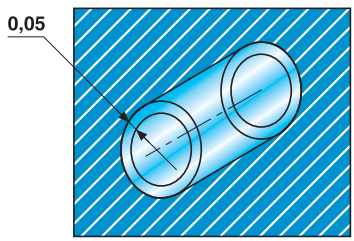
Positioning localisation	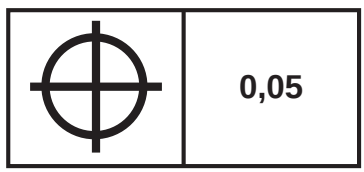	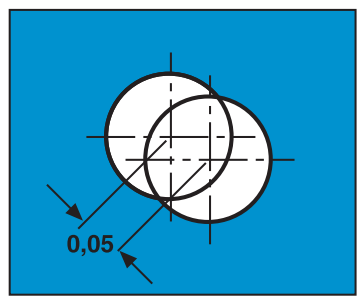

Declaration of conformity

Cemented carbide inserts and insert carriers

Cemented carbide inserts and cemented carbide insert carriers from Seco Tools are not included in the product range intended for the following requirements. Nevertheless Seco Tools can make the following declaration.
These products meet all requirements in RoHS (Restriction of the use of certain Hazardous Substances in electrical and electronic equipment), WEEE (Waste Electrical & Electronic Equipment) and ELV (End of Life Vehicles) requirements.
Products do not contain mercury, lead, hexavalent chromium, cadmium, CFC, HCFC, flame retardants or solvents in concentrations that exceed specifications in the regulations.

Regrinding:
Wet or dry grinding can produce potentially hazardous dusts or mists that can irritate skin, eyes, nose, throat and result in lung damage or disease. To avoid injury use proper safety precautions and protective equipment.

Disposal:
Seco Tools will buy back used inserts and solid carbide tools for recycling. Inserts and solid carbide tools should be separated from other metal waste (steel, aluminium, copper etc).
All packing material is fully recyclable.

CBN and PCD inserts

Inserts from Seco Tools are not included in the product range intended for the following requirements. Nevertheless Seco Tools can make the following declaration.
This product meets all requirements in RoHS (Restriction of the use of certain Hazardous Substances in electrical and electronic equipment), WEEE (Waste Electrical & Electronic Equipment) and ELV (End of Life Vehicles) requirements.
Products do not contain mercury, lead, hexavalent chromium, cadmium, CFC, HCFC, flame retardants or solvents in concentrations that exceed specifications in the regulations.

Regrinding:
Wet or dry grinding can produce potentially hazardous dusts or mists that can irritate skin, eyes, nose, throat and result in lung damage or disease. To avoid injury use proper safety precautions and protective equipment.

Disposal:
Seco Tools will buy back used CBN- or PCD-tipped inserts for recycling. Inserts should be separated from other metal waste (steel, aluminium, copper etc). Solid CBN-inserts may be discarded as landfill waste.
All packing material is fully recyclable.

Black oxide insert carriers

Insert carriers from Seco Tools are not included in the product range intended for the following requirements. Nevertheless Seco Tools can make the following declaration.
This product meets all requirements in RoHS (Restriction of the use of certain Hazardous Substances in electrical and electronic equipment), WEEE (Waste Electrical & Electronic Equipment) and ELV (End of Life Vehicles) requirements.
Products do not contain mercury, lead, hexavalent chromium, cadmium, CFC, HCFC, flame retardants or solvents in concentrations that exceed specifications in the regulations.

Disposal:
Used insert carriers may be sent for recycling together with ordinary steel waste (swarf and discarded steel scrap) for recycling.
All packing material is fully recyclable.

Declaration of conformity

Cermet inserts

Inserts from Seco Tools are not included in the product range intended for the following requirements. Nevertheless Seco Tools can make the following declaration.
This product meets all requirements in RoHS (Restriction of the use of certain Hazardous Substances in electrical and electronic equipment), WEEE (Waste Electrical & Electronic Equipment) and ELV (End of Life Vehicles) requirements.
Cermet grade C15M inserts do contain nickel and will leach nickel when in contact with the skin. Amount of leaching is higher than specified in norm SS-EN 1811 Reference test method for release of nickel from products intended to come into direct and prolonged contact with the skin.
These norms are intended for products that are in direct and prolonged contact with the skin and are therefore not directly applicable for cermet inserts. Persons with known allergic reactions to nickel are advised to wear protective gloves when handling cermet inserts.

Regrinding:
Wet or dry grinding can produce potentially hazardous dusts or mists that can irritate skin, eyes, nose, throat and result in lung damage or disease. To avoid injury use proper safety precautions and protective equipment.

Disposal:
Used inserts may be recycled. Inserts should be separated from other metal waste (steel, aluminium, copper, etc) including cemented carbide inserts.
All packing material is fully recyclable.

Nickel coated insert carriers

Insert carriers from Seco Tools are not included in the product range intended for the following requirements. Nevertheless Seco Tools can make the following declaration.
This product meets all requirements in RoHS (Restriction of the use of certain Hazardous Substances in electrical and electronic equipment), WEEE (Waste Electrical & Electronic Equipment) and ELV (End of Life Vehicles) requirements.
Products do not contain mercury, lead, hexavalent chromium, cadmium, CFC, HCFC, flame retardants or solvents in concentrations that exceed specifications in the regulations.
Insert carriers do contain nickel and will leach nickel when in contact with the skin. Amount of leaching is not higher then norm SS-EN 1811 Reference test method for release of nickel from products intended to come into direct and prolonged contact with the skin.
These norms are intended for products that are in direct and prolonged contact with the skin and are therefore not directly applicable for insert carriers. Persons with known allergic reactions to nickel are advised to wear protective gloves when handling nickel coated insert carriers.

Disposal:
Used tools maybe sent for recycling together with ordinary steel waste (swarf and discarded steel scrap) for recycling.
All packing material is fully recyclable.

Intentionally added alloying elements

Grade	Cemented carbide										Coating						
	W	Ti	Ta	Nb	Co	Cr	Ni	Mo	C	N	Ti	Al	C	N	O	Si	Nb
CP20	■				■				■		■			■			
CP200	■				■	■			■		■	■		■			
CP300	■	■	■	■	■				■		■	■		■			
CP500	■				■	■			■		■	■		■			
CP600	■				■	■			■		■	■		■			
C15M	■	■	■	■	■		■	■	■	■							
CF	■		■		■		■	■	■								
CM	■		■		■		■	■	■								
DP2000	■		■	■	■				■		■	■	■	■	■		
DP3000	■	■	■	■	■				■	■	■	■	■	■	■		
F15M	■				■	■			■		■	■		■			
F25M	■	■	■	■	■				■		■	■		■			
F30M	■				■	■			■		■	■		■			
F40M	■				■	■			■		■	■		■			
HX	■		■		■				■								
H02	■		■		■	■			■								
H15	■				■	■			■								
H25	■				■	■			■								
KX	■				■	■			■								
MH1000	■				■	■			■		■	■		■			
MK1500	■		■		■				■		■	■	■	■	■		
MK2050	■		■		■	■			■		■	■		■		■	
MM4500	■				■	■			■		■	■	■	■	■		
MP1020	■	■	■	■	■				■								
MP1500	■		■	■	■				■		■	■	■	■	■		
MP2500	■		■	■	■				■		■	■	■	■	■		
MP3000	■				■	■			■		■	■		■			
MS2500	■		■	■	■				■		■	■	■	■	■		
MS2050	■				■	■			■		■	■		■			■
RX1500	■		■		■		■	■	■		■	■		■			
RX2000	■		■		■	■			■		■	■		■			
T350M	■		■	■	■				■		■	■	■	■	■		
T25M	■		■	■	■				■		■		■	■			
TGK1500	■		■		■				■		■	■	■	■	■		
TGP25	■	■	■	■	■				■		■	■	■	■	■		
TGP35	■		■	■	■				■		■	■	■	■	■		
TGP45	■		■	■	■				■		■	■	■	■	■		
TH1000	■				■	■			■		■	■		■		■	
TH1500	■				■	■			■		■	■	■	■	■		
TK1001	■				■	■			■		■	■	■	■	■		
TK2001	■		■		■	■			■		■	■	■	■	■		
TM2000	■	■	■	■	■				■	■	■	■	■	■	■		
TM4000	■	■	■	■	■				■	■	■	■	■	■	■		
TP0500	■	■	■	■	■				■		■	■	■	■	■		
TP1020	■	■	■	■	■				■	■							
TP1030	■	■	■	■	■				■	■	■	■		■		■	
TP1500	■	■	■	■	■				■	■	■	■	■	■	■		
TP200	■	■	■	■	■				■	■	■	■	■	■	■		
TP2500	■	■	■	■	■				■	■	■	■	■	■	■		
TP40	■		■	■	■				■		■		■	■			
TS2000	■				■	■			■		■	■		■			
TS2500	■		■		■				■		■	■		■			
T250D	■				■	■			■		■	■		■			
T400D	■				■	■			■		■	■		■			
T100R	■		■		■	■			■		■	■		■			
T60M	■	■	■	■	■				■		■	■		■			
883	■		■		■				■								
890	■				■	■			■								

SMG version 2 – Introduction

The foundation for SMG v2 is a classification of workpiece materials based on their type rather than their relative machinability and consequently it contains workpiece materials like composites. It is comprehensive enough, but still easy to identify which SMG a particular material belongs.

Each SMG has a specific material standard in a specific condition assigned as reference to allow easy adjustment of cutting data for any actual material compared to any Seco reference material see page 616-627.

As example the reference materials EN C45E for SMG P4 and EN 42 CrMo 4 for both SMG P5 and SMG H5 see further details in the following tables.

In SMG v2 classification of workpiece materials involves a specific material standard in a specific condition assigned as reference for easy and unabiguous adjustment of cutting data for any actual material compared to any Seco reference material. As examples the reference materials EN C45E for SMG P4 and EN 42 CrMo 4 for both SMG P5 and SMG H5 shown below in table 1 where the reference level material property is indicated.

SMG	Description	Properties	Reference
P4	Low alloy general structural steels, 0.25% < C < 0.67%wt Low alloy Quench & Temper steels	520 < R_m < 1200	C 45E R_m = 660 N/mm^2
P5	Structural steels, 0.25% < C < 0.67%wt Quench & Temper steels	550 < R_m < 1200	42 CrMo 4 R_m = 700 N/mm^2

SMG	Description	Properties	Reference
H5	Quenched & Tempered steels	38 < HRC < 56	42 CrMo 4 50 HRC

Focusing specifically on EN 42 CrMo 4 in annealed condition, the ultimate tensile strength R_m may typically vary between Rm = 630 N/mm^2 and R_m = 780 N/mm^2, which provide a reference level for SMG P5. In Quenched & Tempered condition, the ultimate tensile strength R_m may typically be between R_m = 900 N/mm^2 and R_m = 1100 N/mm^2 thus still belongs to SMG P5. However, if hardened above R_m = 1200 N/mm^2 it instead belongs to SMG H5.

SMG	EN	W.-Nr	AFNOR	BS	UNI	JIS	AISI / ASTM	GOST	Condition	R_{m_nom}	HRC_{nom}
P5	42 CrMo 4	1.1201	42 CD 4	708 M 40	42 CrMo 4	SCM 440 (H)	4142, 4140	38HM	Annealed	700	
	42 CrMo 4	1.1201	42 CD 4	708 M 40	42 CrMo 4	SCM 440 (H)	4142, 4140	38HM	Quenched & Tempered	1000	
H5	42 CrMo 4	1.1201	42 CD 4	708 M 40	42 CrMo 4	SCM 440 (H)	4142, 4140	38HM	Quenched & Tempered		45
	42 CrMo 4	1.1201	42 CD 4	708 M 40	42 CrMo 4	SCM 440 (H)	4142, 4140	38HM	Quenched & Tempered		50

The EN 42CrMo4 quench & tempered steel could be used to illustrate the machinability dependence of materials' condition.

The graphs below indicate how speed recommendations for a nominal material conditions may be adjusted for relative R_m (left diagram valid for ISO-P) and for relative HRC (valid for ISO-H).

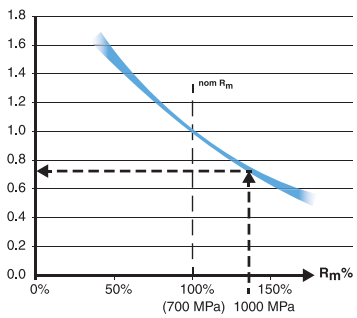

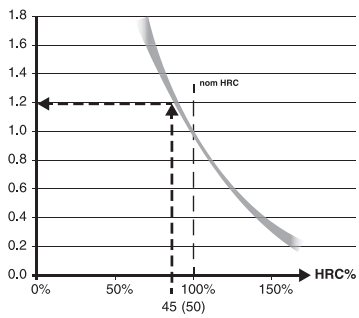

To further illustrate how the SMG v2 SMG P5 nominal v_c can be adjusted to a more accurate recommended v_c we need ultimate tensile strength R_m data and in this case we use the EN 42 CrMo 4 quenched & tempered to R_m = 1000 N/mm^2 according to above table (bold blue arrows).

Assume that we find that the SMG P5 nominal v_c = 280 m/min for a certain product and machining.

Then, actual recommended v_c = 280 m/min x 0,75 = 210 m/min.

Consequently in the SMG H5 the nominal v_c can be adjusted using the hardened EN 42 CrMo 4 at HRC 45 (smaller grey arrows).

Assume that the SMG H5 nominal v_c = 50 m/min for a certain product and machining using a coated cemented carbide tools then, actual recommended v_c = 50 m/min x 1,2 = 60 m/min.

For further workpiece material details please see pages 616-627 and suggested cutting data at applicable pages.

For more convenient cutting data handling we recommend applicable tools in My Pages – Suggest on www.secotools.com

Steels, ferritic and martensitic stainless steels

SMG	Description	Properties	Reference
P1	Free-cutting steels	360 < R_m < 880	11 SMn30 R_m = 385 N/mm^2
P2	Low alloy ferritic steels, C < 0.25%wt Low alloy weldable general structural steels	320 < R_m < 600	S235JRG2 R_m = 420 N/mm^2
P3	Ferritic & ferritic/pearlitic steels, C < 0.25%wt Weldable general structural steels Case hardening steels	430 < R_m < 610	16 MnCr 5 R_m = 550 N/mm^2
P4	Low alloy general structural steels, 0.25% < C < 0.67%wt Low alloy Quench & Temper steels	520 < R_m < 1200	C 45E R_m = 660 N/mm^2
P5	Structural steels, 0.25% < C < 0.67%wt Quench & Temper steels	550 < R_m < 1200	42 CrMo 4 R_m = 700 N/mm^2
P6	Low alloy through hardening steels, C > 0.67%wt Low alloy spring and bearing steels	520 < R_m < 1200	C 100S R_m = 600 N/mm^2
P7	Through hardening steels, C > 0.67%wt Spring and bearing steels	600 < R_m < 1200	100 Cr 6 R_m = 650 N/mm^2
P8	Tool steels High Speed Steels (HSS)	600 < R_m < 1200	X 40 CrMoV 5 1 R_m = 700 N/mm^2
P11	Ferritic & martensitic stainless steels	415 < R_m < 1200	X 20 Cr 13 R_m = 675 N/mm^2

Free-cutting, austenitic and duplex stainless steels

SMG	Description	Properties	Reference
M1	Free-cutting austenitic stainless steels		X 10 CrNiS 18 9
M2	Low alloy austenitic stainless steels		X 5 CrNi 18 9
M3	Medium alloy austenitic stainless steels		X 2 CrNiMo 18 14 3
M4	High alloy austenitic and duplex stainless steels		X 2 CrNiMoN 22 5 3
M5	Difficult high alloy austenitic and duplex stainless steels		X 2 CrNiMoN 25 7 4

Cast irons

SMG	Description	Properties	Reference
K1	Grey cast irons (GCI)		EN-GJL-250
K2	Compacted graphite irons (CGI)		EN-GJV-400
K3	Malleable cast irons (MCI)		EN-GJMB-550-4
K4	Nodular cast irons (SGI)		EN-GJS-500-7
K5	Austempered ductile irons (ADI)		EN-GJS-1000-5
K6	Austenitic lamellar cast irons		EN-GJLA-XNiCuCr15-6-2
K7	Austenitic nodular cast irons		EN-GJSA-XNiMn23-4

Non-ferrous metals

SMG	Description	Properties	Reference
N1	Aluminum alloys, Si < 9%		AW-7075
N2	Aluminum alloys, 9% < Si < 16%		AC-44200 Si = 12%
N3	Aluminum alloys, Si >16%		AlSi17Cu5
N11	Copper alloys		CW614N

Superalloys and titanium

SMG	Description	Properties	Reference
S1	Iron based superalloys		Discalloy
S2	Cobalt based superalloys		Stellite 21
S3	Nickel based superalloys		Inconel 718
S11	Titanium, low alloyed, (α)		Ti
S12	Titanium, medium alloyed, (α+β)		TiAl6V4
S13	Titanium, high alloyed, (near β and β)		Ti10V2Fe3Al

Hard materials

SMG	Description	Properties	Reference
H3	Case hardened steels	58 < HRC < 62	16 MnCr 5 60 HRC
H5	Quenched & Tempered steels	38 < HRC < 56	42 CrMo 4 50 HRC
H7	Quenched & Tempered steels Bearing steels	56 < HRC < 64	100 Cr 6 60 HRC
H8	Tool steels High Speed Steels	38 < HRC < 64	X 40 CrMoV 5 1 50 HRC
H11	Martensitic stainless steels	38 < HRC < 50	X 20 Cr 13 45 HRC
H12	Precipitation hardened stainless steels	33 < HRC < 50	X 5 CrNiCuNb 16 4 35 HRC
H21	Manganese steels	23 < HRC < 64	X 120 Mn 12 50 HRC
H31	White cast irons	50 < HRC < 64	EN-GJN-HV600(XCr11) 55 HRC

Other difficult materials

SMG	Description	Properties	Reference
PM1	Low alloy PM materials		F-0008 Fe-0.7C
PM2	Medium alloy PM materials		FLC-4608 Fe2Cu1.8Ni0.5Mo0.2Mn0.8C
PM3	High alloy PM materials Exhaust valve seat materials		
HF1	Hard facing alloys Welded or plasma deposited iron based alloys		
HF2	Hard facing alloys Welded or plasma deposited cubalt and nickel based alloys		
CC1	Sintered tungsten carbide		G50

Plastics and Composites

SMG	Description	Properties	Reference
TS1	Thermosetting polymers		Urea formaldehyde (UF)
TS2	Thermosetting Carbon fiber composites		T300 T700 T800 HTA-S IMA - Epoxy (M21)...
TS3	Thermosetting Glass fiber composites		Epoxy - HX..(42..)/E glass (7781...)...
TS4	Thermosetting Aramide fibre composites		Kevlar 49
TP1	Thermoplastic polymers		Polycarbonate (PC)
TP2	Thermoplastic Carbon fiber composites		PPS/PEEK - T300..
TP3	Thermoplastic Glass fiber composites		PPS/PEEK - E glass or A glass...
TP4	Thermoplastic Aramide fibre composites		

Graphite

SMG	Description	Properties	Reference
GR1	Graphite		R 8500

SMG

SMG	EN	EN-Nr	W.-Nr	DIN	AFNOR	BS	UNI	JIS	SS	UNS
	11 SMn30	1.0715	1.0715	9 SMn 28	S 250	230 M 07	CF 9 SMn 28	SUM 22	1912	G12130
	11 SMnPb30	1.0718	1.0718	9 SMnPb 28	S 250 Pb		CF 9 SMnPb 28	SUM 22 L	1914	G12134
	10 S 20	1.0721	1.0721	10 S 20	10 F 1	210 M 15	CF 10 S 20			
			1.0722	10 SPb 20	10 PbF 2		CF 10 SPb 20			
P1	15 SMn13	1.0725	1.0723	15 S 20		210 A 15		SUM 32	1922	
	35 S20	1.0726	1.0726	35 S 20	35 MF 4	212 M 36			1957	G11400
	46 S20	1.0727	1.0727	46 S 20	45 MF 4	212 M 44			1973	G11460
	11 SMn37	1.0736	1.0736	9 SMn 36	S 300	240 M 07	CF 9 SMn 36			G12150
	11 SMnPb 37	1.0737	1.0737	9 SMnPb 36	S 300 Pb		CF 9 SMnPb 36		1926	G12144
	S235JR	1.0037	1.0037	St 37-2	E 24-2		Fe 360 B	STKM 12 C	1311	
	S235JRG2	1.0038	1.0116	St 37-3	E 24-3, E 24-4	4360-40 C	Fe 360 D FF		1312, 1313	
	S275J2G3	1.0144	1.0144	St 44-3 N	E 28-3, E 28-4	4360-43 C	Fe 430 D FF	SM 41 C	1412, 1414	
	C 10	1.0301	1.0301	C 10	AF 34 C 10, XC 10	045 M 10	C 10	S 10 C		G10100
P2			1.0401	C 15	AF3 7 C 12, XC 18	080 M 15	C 15, C 16		1350	G10170
	C22+N	1.0402	1.0402	C 22	C 20	050 A 20	C 20, C 21		1450	G10200
	S355JR	1.0570	1.0570	St 52-3	E 36-3, E 36-4	4360-50 C	Fe 510 B	SM 50 YA	2172, 2132	
	C 15R	1.1141	1.1141	Ck 15	XC 15, XC 18	080 M 15	C 15, C 16	S 15 C, S 15 CK	1370	G10170
			1.1158	Ck 25	XC 25	060 A 25	C 25	S 25 C		G10250
			1.2162	21 MnCr 5	20 NC 5			SCR 420 H		
	16 Mo 3	1.5415	1.5415	15 Mo 3	15 D 3	1501-240	16 Mo 3		2912	
			1.5423	16 Mo 5		1503-245-420	16 Mo 5	SB 450 M		G45200
	14 NiCr 14	1.5752	1.5752	14 NiCr 14	12 NC 15	655 M 13		SNC 815 (H)		G33106
			1.5919	15 CrNi 6	16 NC 6	S 107	16 CrNi 4			
	18 NiCrMo 7 6	1.6587	1.6587	18 CrNiMo 7 6	18 NCD 6	820 A 16	18 NiCrMo 7			
P3	16 MnCr 5	1.7131	1.7131	16 MnCr 5	16 MC 5	527 M 17	16 MnCr 5	SCR 415	2511	G51170
	16 MnCrS 5	1.7139	1.7139	16 MnCrS 5						
	20 MnCr 5	1.7147	1.7147	20 MnCr 5	20 MC 5		20 MnCr 5	SMnC 420 (H)		G51200
	20 MnCrS 5	1.7149	1.7149	20 MnCrS 5	20 MnCrS 5			SMnC 21 H		
	13 CrMo 4 5	1.7335	1.7335	13 CrMo 4 4	15 CD 3.5	1501-620 Gr. 27	14 CrMo 4 5		2216	
			1.7337	16 CrMo 4 4	15 CD 4.5	1501-620 Gr. 27	14 CrMo 4 5		2216	
	10 CrMo 9 10	1.7380	1.7380	10 CrMo 9 10	10 CD 9.10	1501-622 Gr. 31	12 CrMo 9 10		2218	J21890
	C35+N		1.0501	C 35	AF 55 C 35	060 A 35	C 35		1550	G10350
	E 335	1.0503	1.0503	C 45	AF 65 C 45	80 M 46	C 45	S 45 C	1650	G10430
	C40+N		1.0511	C 40	AF 60 C 40	080 M 40	C 40	S 40 C		
	E 360	1.0070	1.0535	St 70-2	A 70-2		Fe 690		1655	
	C60+N	1.0601	1.0601	C 60	CC 55	080 A 62	C 60			G10600
P4			1.1157	40 Mn 4	35 M 5	150 M 36				G10390
	G 28 Mn6	1.1165	1.1165	30 Mn 5		120 M 36		SMn 1 H, SCMn 2		G13300
	G 28 Mn6+QT	1.1165	1.1167	36 Mn 5	40 M 5	150 M 36		SMn 438 (H), SCMn 3	2120	G13350
	C 35E	1.1181	1.1181	Ck 35	XC 38 H1	080 M 36	C 35	S 35 C	1572	G10340
	C 45E	1.1191	1.1191	Ck 45	XC 42	080 M 46	C 45	S 45 C	1672	G10420
	C 60E	1.1221	1.1221	Ck 60	XC 60	080 A 62	C 60	S 58 C	1665, 1678	G10640
			1.1740	C 60 W	Y3 55			SK 7		
	55 SiCr7	1.7100	1.0904	55 Si 7	55 S 7	250 A 53	55 Si 8		2085, 2090	
	42 CrMo 4	1.7225	1.1201	42 CrMo 4	42 CD 4	708 M 40	42 CrMo 4	SCM 440 (H)	2244	G41400
	42 CrMo 4	1.7225	1.1201	42 CrMo 4	42 CD 4	708 M 40	42 CrMo 4	SCM 440 (H)	2244	G41400
			1.2330	35 CrMo 4	34 CD 4	708 A 37	35 CrMo 4		2234	T51620
			1.2542	45 WCrV 7		BS 1	45 WCrV 8 KU		2710	T41901
		1.2714	1.2714	56 NiCrMoV 7		BH 224-5	56 NiCrMoV7-KU	SKT 4		T61206
			1.5121	46 MnSi 4						
			1.5710	36 NiCr 6	35 NC 6	640 A 35		SNC 236		
P5			1.5736	36 NiCr 10	35 NC 11		35 NiCr 9	SNC 631 (H)		
	36CrNiMo4+TA		1.6511	36 CrNiMo 4	40 NCD 3	816 M 40	38 NiCrMo 4 (KB)			G98400
	34 CrNiMo 6	1.6582	1.6582	34 CrNiMo 6	35 NCD 6	817 M 40	35 NiCrMo 6 (KW)	SNCM 447	2541	
	34 Cr 4	1.7033	1.7033	34 Cr 4	32 C 4	530 A 32	34 Cr 4 (KB)	SCr 430 (H)		G51320
	41 Cr 4	1.7035	1.7035	41 Cr 4	42 C 4	530 M 40	41 Cr 4	SCr 440 (H)		G51400
	25 CrMo 4	1.7218	1.7218	25 CrMo 4	25 CD 4 S	708 M 25	25 CrMo 4 (KB)	SCM 425	2225	G41300
			1.7361	32 CrMo 12	30 CD 12	722 M 24	32 CrMo 12		2240	
	50 CrV 4	1.8159	1.8159	50 CrV 4	50 CV 4	735 A 50	51 CrV 4	SUP 10	2230	H61500
	41 CrAlMo 7 10	1.8509	1.8509	41 CrAlMo 7	40 CAD 6.12	905 M 39	41 CrAlMo 7	SACM 645	2940	K24065
	C 67S	1.1231	1.1231	Ck 67	XC 68	060 A 67	C 70		1770	G10700
	C 100S	1.1274	1.1274	Ck 101		060 A 96		SUP 4	1870	G10950
P6	C 105U	1.1545	1.1545	C 105 W1	Y1 105		C 100 KU		1880	
			1.1645	C 105 W2	Y1 105		C 100 KU	SK 3		
			1.1663	C 125 W	Y2 120		C 120 KU	SK 2		

SMG

U.N.E./ I.H.A.	AISI / ASTM	GOST	Misc. Brands	Condition	Structure
	1213			Annealed	
	12 L 13			Annealed	
	1108			Annealed	
	11 L 08			Annealed	
				Annealed	
	1140	40		Annealed	
	1146			Annealed	
	1215			Annealed	
	12 L 14			Annealed	
		16D		Annealed	
	A 573 Gr. 58	18kp		Annealed	
	A 573 Gr. 70	St14kP		Annealed	
	1010	10		Annealed	
F.1110	1015	15		Annealed	
	1023	20		Annealed	
		17G1S		Annealed	
F.1511	1015	15		Annealed	
F.1120	1025	25		Annealed	
				Annealed	
	A 204 Gr. A			Annealed	
	4520			Annealed	
	3310, 9314	20X2H4A		Annealed	
	4320			Annealed	
				Annealed	
F.1516	5115	12KHN2		Annealed	
		18HG		Annealed	
	5120	20KH		Annealed	
	5120 H	20KH		Annealed	
	A 182-F11, F12	12KHM		Annealed	
	A 387 Gr. 12 Cl. 2			Annealed	
F.155	A 182-F22	12KH8		Annealed	
F.1130	1035	35		Annealed	
F.5110	1045	45		Annealed	
	1040	40		Annealed	
F.1150	1055	55		Annealed	
	1060	60		Annealed	
	1039	40G		Annealed	
	1330	30G2		Annealed	
F.411	1335	35G2		Annealed	
F.1135	1035	35		Annealed	
F.1140	1045	45		Annealed	
F.1150	1064	60		Annealed	
	1060	60		Annealed	
F.144	9255	55S2		Annealed	
F.1252	4142, 4140	38HM		Annealed	
F.1252	4142, 4140	38HM		Quenched & Tempered	
F.1250	4135	35KHM		Annealed	
F.5241	S1	5KHV2S		Annealed	
	L6	5KHNV		Annealed	
	5045			Annealed	
	3135			Quenched & Tempered	
	3435			Annealed	
	9840			Quenched & Tempered	
F.1280	4340	38H2N2MA		Annealed	
	5132	35KH		Quenched & Tempered	
	5140	40H		Quenched & Tempered	
F.1251	4130	20KHM		Quenched & Tempered	
				Quenched & Tempered	
F.143	6150	50KHFA		Quenched & Tempered	
F.1740	A 355 Cl. A			Annealed	
F.5103	1070	70		Annealed	
F.5117	1095			Annealed	
F.5118	W1	U10A		Annealed	
		U10		Annealed	
	W1	U13		Annealed	

SMG

SMG	EN	EN-Nr	W.-Nr	DIN	AFNOR	BS	UNI	JIS	SS	UNS
P7	107 CrV 3	1.2210	1.2210	115 CrV 3	100 C 3		107 CrV 3 KU			T61202
			1.2510	100 MnCrW 4	90 MWCV 5	BO 1	95 MnWCr 5 KU	SKS 3	2140	T31501
	90 MnCrV 8	1.2842	1.2842	90 MnCrV 8	90 MV 8	BO 2	90 MnVCr 8 KU			T31502
	100 Cr 6	1.3505	1.3505	100 Cr 6	100 C 6	534 A 99	100 Cr 6	SUJ 2	2258	G51986
P8	X 210 Cr 12	1.2080	1.2080	X 210 Cr 12	Z 200 C 12	BD 3	X 210 Cr 13 KU	SKD 1		T30403
			1.2343	X 38 CrMoV 5 1	Z 38 CDV 5	BH 11	X 37 CrMoV 5 1 KU	SKD 6		T20811
	X 40 CrMoV 5 1	1.2344	1.2344	X 40 CrMoV 5 1	Z 40 CDV 5	BH 13	X 40 CrMo 5 1 1 KU	SKD 61	2242	T20813
	X 100 CrMoV 5	1.2363	1.2363	X 100 CrMoV 5 1	Z 100 CDV 5	BA 2	X 100 CrMoV 5 1 KU	SKD 12	2260	T30102
			1.2365	X 32 CrMoV 3 3	32 DCV 28	BH 10	30 CrMoV 12 27 KU	SKD 7		T20810
			1.2436	X 210 CrW 12			X 215 CrW 12 1 KU	SKD 2	2312	
			1.2601	X 165 CrMoV 12			X 165 CrMoW 12 KU		2310	
			1.2713	55 NiCrMoV 6	55 NCDV 7			SKT 4		T61206
	HS 6-5-2-5	1.3243	1.3243	S 6-5-2-5	Z 85 WDKCV 06-05-05-04-02		HS 6-5-2-5	SKH 55	2723	
	HS 2-10-1-8	1.3247	1.3247	S 2-10-1-8	Z 110 DKCWV 09-08-04	BM 42	HS 2-9-1-8	SKH 51		T11342
	HS 18-1-2-5	1.3255	1.3255	S 18-1-2-5	Z 80 WKCV 18-05-04-01	BT 4	HS 18-1-1-5	SKH 3		T12004
	HS 6-5-2	1.3343	1.3343	S 6-5-2	Z 85 WDCV 06-05-04-02	BM 2	HS 6-5-2	SKH 9, SKH 51	2722	T11302
	HS 2-9-2	1.3348	1.3348	S 2-9-2	Z 100 DCWV 09-04-02-02		HS 2-9-2	SKH 58	2782	T11307
	HS 18-0-1	1.3355	1.3355	S 18-0-1	Z 80 WCV 18-04-01	BT 1	HS 18-0-1	SKH 2		T12001
P11	X 6 Cr 13	1.4000	1.4000	X 6 Cr 13	Z 6 C 12	403 S 17	X 6 Cr 13	SUS 403	2301	S41008
	X 12 Cr 13	1.4006	1.4006	X 10 Cr 13	Z 10 C 13	410 S 21	X 12 Cr 13	SUS 410	2302	S41000
	X 6 Cr 17	1.4016	1.4016	X 6 Cr 17	Z 8 C 17	430 S 15	X 8 Cr 17	SUS 430	2320	S43000
	X 20 Cr 13	1.4021	1.4021	X 20 Cr 13	Z 20 C 13	420 S 37	X 20 Cr 13	SUS 420 J 1	2303	S42000
	X 39 Cr 13	1.4031	1.4031	X 40 Cr 13	Z 40 C 14	420 S 45	X 40 Cr 14	SUS 420	2304	S40280
	X 70 CrMo 15	1.4109	1.4109	X 65 CrMo 14	Z 70 D 14			SUS 440 A		S44002
	X 90 CrMoV 18	1.4112	1.4112	X 90 CrMoV 18	Z 2 CND 18 05	409 S 19	X CrTi 12	SUS 440 B	2327	S44003
	X 105 CrMo 17	1.4125	1.4125	X 105 CrMo 17	Z 100 CD 17		X 105 CrMo 17	SUS 440 C		S44004
	X 3 CrNIMo 13 3	1.4313	1.4313	X 5 CrNi 13 4	Z 5 CN 13.4	425 C 11	X 6 CrNi 13 04	SCS 5	2385	J91540
	X 18 CrN 28	1.4749	1.4749	X 18 CrN 28	Z 18 C 25				2322	S44600
M1	X 10 CrNiS 18 9	1.4305	1.4305	X 10 CrNiS 18 9	Z 10 CNF 18.09	303 S 31	X 10 CrNi 18 09	SUS 303	2346	S30300
M2	X 12 CrNi 18 8	1.4300	1.4300	X 12 CrNi 18 8	Z 12 CN 18	302 S 25		SUS 302	2331	S30200
	X 5 CrNi 18 9	1.4301	1.4301	X 6 CrNi 18 10	Z 6 CN 18.09	304 S 31	X 5 CrNi 18 11	SUS 304	2333	S30400
	X 2 CrNi 19 11	1.4306	1.4306	X 2 CrNi 19 11	Z 2 CN 18.10	304 S 12	X 3 Cr Ni 18 11	SUS 304 L	2352	S30403
	X 9 CrNi 18 8	1.4310	1.4310	X 12 CrNi 17 7	Z 12 CN 17.07	301 S 21	X 12 CrNi 17 07	SUS 301	(2331)	S30100
	X 5 CrNiMo 17 12 2	1.4401	1.4401	X 5 CrNiMo 17 12 2	Z 3 CND 17.11.1	316 S 31	X 5 CrNiMo 17 12	SUS 316	2347	S31600
	X 6 CrNiNb 18 10	1.4550	1.4550	X 6 CrNiNb 18 10	Z 6 CNNb 18.10	347 S 31	X 6 CrNiNb 18 11	SUS 347	2338	S34700
M3	X 2 CrNiN 18 10	1.4311	1.4311	X 2 CrNiN 19 11	Z 2 CN 18 .10 Az	304 S 62	X 2 CrNiN 18 11	SUS 304 LN	2371	S30453
	X 12 CrNi 25 21	1.4335	1.4335	X 12 CrNi 25 21	Z 12 CN 25.20	310 S 24	X 6 CrNi 26 20	SUH 310, SUS 310 S	2361	S31008
	X 2 CrNiMoN 17 13 3	1.4429	1.4429	X 2 CrNiMoN 17 13 3	Z 2 CND 17.13 Az	316 S 62	X 2 CrNiMoN 17 13 3	SUS 316 LN	2375	S31653
	X 2 CrNiMo 18 14 3	1.4435	1.4435	X 2 CrNiMo 18 14 3	Z 2 CND 17.13	316 S 12	X 2 CrNiMo 17 13 2	SCS 16, SUS 316 L	2353	S31603
	X 3 CrNiMo 18 12 3	1.4466	1.4466	X 5 CrNi 18 15		317 S 16	X 5 CrNi 18 15	SUS 317	2366	S31700
	X 9 CrNiSiNCe 21 11 2	1.4835	1.4893	X 9 CrNiSiNCe 21 11 2		310 S 31			2368	S30815
M4	X 2 CrNiMoSi 19 5	1.4424	1.4417	X 2 CrNiMoSi 19 5	Z 2 CND 18.05.03				2376	S31500
	X 3 CrNiMo 27 5 2	1.4460	1.4460	X 4 CrNiMo 27 5 2	Z 3 CND 25.7 Az		X 3 CrNiMo 27 5 2	SUS 329 J 1	2324	S32900
	X 2 CrNiMoN 22 5 3	1.4462	1.4462	X 2 CrNiMoN 22 5	Z 2 CND 22.05 Az	332 S 15	X 2 CrNiMoN 22 5		2377	S31803
	X 2 NiCrMoCu 25 20 5	1.4539	1.4539	X 2 NiCrMoCu 25 20 5	Z 2 NCDU 25 20	904 S 13			2562	N08904
M5	X 2 CrNiMoN 25 7 4	1.4410	1.4410	X 2 CrNiMoN 25 7 4	Z 3 CND 25.07 Az		X 2 CrNiMoN 25 7 4		2328	S32750
	X 1 CrNiMoN 20 18 7	1.4547	1.4529	X 1 CrNiMoN 20 18 7	Z 1 CNDU 20.18.05 Az		X 1 CrNiMoN 20 18 7		2778	S31254
	X 6 NiCrTiMoV 25 15	1.4534	1.4534	X 3 CrNiMoAl 13 8 2						S13800
		1.4540	1.4540	X 4 CrNiCuNb 16 4	Z 4 CNUNb 16.4 M					S15500
	X 3 CrNiMoAl 13 8 2	1.4568	1.4568	X 7 CrNiAl 17 7	Z 9 CAN 17.7	301 S 81	X 7 CrNiAl 17 7	SUS 631	2388	S17700
	X 1 CrNiMoN 25 22 8	1.4652	1.4652	X 2 CrNiMoN 25 22 7						S32654
	X 10 NiCrAlTi 32 20	1.4876	1.4876	X 10 NiCrAlTi 32 20	Z 10 NC 32.21			NCF 800		N08800
	X 5 CrNiCuNb 16 4	1.4980	1.4943	X 4 NiCrTi 25 15	Z 6 NCTDV 25.15	HR 51		SUH 660	2570	S66286

SMG

U.N.E./ I.H.A.	AISI / ASTM	GOST	Misc. Brands	Condition	Structure
F.520L	L2	11KHF		Annealed	
F.5220	O1	9KHVG		Annealed	
	O2	9G2F		Annealed	
F.5230	52100	SHKH15		Annealed	
F.5212	D3	KH12		Annealed	
	H11	4KH5MFS		Annealed	
F.5318	H13	4KH5MF1S		Annealed	
F.5227	A2	9KH5VF		Annealed	
	H10	3KH3M3F		Annealed	
F.5213		KH12		Annealed	
		KH12MF		Annealed	
F.520.S	L6	5KHNM		Annealed	
F.5613	M35	R6M5K5		Annealed	
	M42	R2AM9K5		Annealed	
	T4	R18K5F2		Annealed	
F.5603	M2	R6M5		Annealed	
	M7			Annealed	
	T1	R18		Annealed	
	403	08KH13		Annealed	Ferrite
F.3401	410, CA-15	12KH13, 08KH13		Annealed	Martensite
F.3113	430	12KH17		Annealed	Ferrite
F.5261	420	20KH13		Annealed	Martensite
F.3404	420	40KH13		Annealed	Martensite
	440 A			Annealed	Martensite
	440 B	95KH18		Annealed	Martensite
	440 C	95KH18		Annealed	Martensite
			F6NM	Annealed	Martensite
	446	15KH28		Annealed	Ferrite
F.3508	303	12KH19N9		Annealed	Austenite
	302	12KH18N9		Annealed	Austenite
F.3504	304, 304 H	08KH18N10		Annealed	Austenite
F.3504	304 L	03KH18N11		Annealed	Austenite
F.3517	301	07KH16N6		Annealed	Austenite
F.3534	316	08KH17H13M2T		Annealed	Austenite
F.3524	347	08KH18N12B		Annealed	Austenite
F.3541	304 LN	03KH18N11		Annealed	Austenite
	310 S	12KH25N20		Annealed	Austenite
	316 LN	03KH16N15M3		Annealed	Austenite
F.3533	316 L	03KH17N14M3		Annealed	Austenite
	317	08KH17H15M3T		Annealed	Austenite
			253 MA	Annealed	Austenite
			3RE60	Annealed	Duplex
	329			Annealed	Duplex
	329 LN		SAF 2205	Annealed	Duplex
	904L			Annealed	Super austenite
	F 53		SAF 2507	Annealed	Super duplex
			254 SMO	Annealed	Super austenite
	XM-13		PH13-8Mo	Solution treated	Austenite
	XM-12		15-5-PH	Solution treated	Martensite
	AMS 5528	09KH17N7YU1	17-7-PH	Solution treated	Austenite/ferrite
			654 SMO	Annealed	Super austenite
			Alloy 800	Annealed	Austenite
	660		A286	Solution treated	Austenite

SMG

SMG	EN	EN-Nr	W.-Nr	DIN	AFNOR	BS	UNI	JIS	SS	UNS
K1	EN-GJL-150	0.6150	0.6150	GG-15	Ft 15 D	Grade 150	G15	FC 150	01 15-00	F11601
	EN-GJL-200	0.6200	0.6200	GG-20	Ft 20 D	Grade 220	G20	FC 200	01 20-00	F12101
	EN-GJL-215			GG-220 HB					02 19	
	EN-GJL-250	0.6250	0.6250	GG-25	Ft 25 D	Grade 260	G25	FC 250	01 25-00	F12401
	EN-GJL-300	0.6300	0.6300	GG-30	Ft 30 D	Grade 300	G30	FC 300	01 30-00	F13101
	EN-GJL-350	0.6350	0.6350	GG-35	Ft 35 D	Grade 350	G35	FC 350	01 35-00	F13502
K2	EN-GJV-300			GJV-300						
	EN-GJV-350			GJV-350						
	EN-GJV-400			GJV-400						
	EN-GJV-450			GJV-450						
	EN-GJV-500			GJV-500						
K3	EN-GJMB-550-4	0.8155		GTS-55-04	P 540/5	P 540/5	P 55-04	PCMP55-04	08 54-00	F24130
K4	EN-GJS-350-22	0.7033	0.7033	GGG-35.3	FGS 370-17	Grade 350/22		FCD 350-22L	07 17-15	
	EN-GJS-400-15	0.7040	0.7040	GGG-40	FGS 400-12	Grade 420/12	GS 400-12	FCD 400-18L	07 17-02	F32800
	EN-GJS-400-18	0.7043	0.7043	GGG-40.3	FGS-370-17	Grade 370/17	GSO 42/17		07 17-12	F32800
	EN-GJS-500-7	0.7050	0.7050	GGG-50	FGS 500-7	Grade 500/7	GS 500-7	FCD 500-7	07 27-02	F33800
	EN-GJS-600-3	0.7060	0.7060	GGG-60	FGS 600-3	Grade 600/3	GS 600-3	FCD 600-3	07 32-03	F34100
	EN-GJS-700-2	0.7070	0.7070	GGG-70	FGS 700-2	Grade 700/2	GS 700-2	FCD 700-2	07 37-01	F34800
K5	-									ADI grade 5
	EN-GJS-1000-5			GJS-1000-5						ADI grade 2
	EN-GJS-1200-2			GJS-1200-2						ADI grade 3
	EN-GJS-1400-1			GJS-1400-1						ADI grade 4
	EN-GJS-800-8			GJS-800-8						ADI grade 1
K6	EN-GJLA-XNiCr 20-2	0.6660	0.6660	GGL-NiCr 20 2	FGL Ni20 Cr2	Grade F2			05 23-00	F41002
	EN-GJLA-XNiCr 30-3	0.6676	0.6676	GGL-NiCr 30 3	FGL Ni30 Cr3	Grade F3				F41004
	EN-GJLA-XNiCuCr15-6-2	0.6655	0.6655	GGL-NiCuCr 15 6 2	FGL Ni15 Cu6 Cr2	Grade F1				F41000
K7	EN-GJSA-XNi35	0.7683	0.7683	GGG-Ni 35	FGS Ni35					F43006
	EN-GJSA-XNiCr20-2	0.7660	0.7660	GGG-NiCr 20 2	FGS Ni20 Cr2	Grade S2				F43000
	EN-GJSA-XNiCr30-3	0.7676	0.7676	GGG-NiCr 30 3	FGS Ni30 Cr3	Grade S3				F43003
	EN-GJSA-XNiMn13-7	0.7652	0.7652	GGG-NiMn 13 7	FGS Ni13 Mn7	Grade S6			07 72-00	-
	EN-GJSA-XNiMn23-4	0.7673	0.7673	GGG-NiMn 23 4	FGS Ni23 Mn4	Grade S2M				F43010
N1	AW-1050A	Al99.5	3.0255	Al99.5	A-5/1050A	1B		(A1050)	4007	AA1050A
	AW-3103	AlMn1	3.0515	AlMn1		N3			4054	AA3103
	AW-3003	AlMn1Cu	3.0517	AlMn1Cu	A-M1/3003			A3003		AA3003
	AW-2014	AlCuSiMn	3.1255	AlCuSiMn	A-U4SG/2014	H15			4338	AA2014
	AW-2011	AlCuBiPb	3.1655	AlCuBiPb	A-U5PbBi/2011	FC1		A2011	4355	AA2011
	AC-46200	AlSi8Cu3(Si)	3.2161	G-AlSi8Cu3					4251	A13800
	AC-42000		3.2341	G-AlSi5Mg	A-S7G	LM25	3599	AC 4C	4244	
	AW-6060	AlMgSi0.5	3.3206	AlMgSi0.5	A-GS/6060	(H9)			4103	AA6060
	AW-6063	AlMgSi0.7	3.3210	AlMgSi0.7	A-GSUC/6061	(H10)		(A6063)	4104,4107	AA6005
	AW-5005	AlMg1	3.3315	AlMg1	A-G0.6	N41			4106	AA5005
	AW-7020	AlZn4.5Mg1	3.4335	AlZn4.5Mg1	A-Z5G/7020	H17			4425	AA7020
	AW-7075		3.4365	AlZnMgCu1.5	A-Z5GU/7075	2L95/2L96		A7075		AA7075
	MN65120	MgSe3Zn2Zr1	3.5103	G-MgSe3Zn2Zr1	ZRE1	MAG6-TE				M12330
	MG-P-63	MgAl6Zn	3.5612	G-MgAl6Zn	G-A6-Z1	MAG-E-121				M11600
	MG-P-61	MgAl8Zn	3.5812	G-MgAl8Zn	(G-A7-Z1)					
N2	AW-6082	AlMgSi1	3.2315	AlMgSi1	A-SGM0.7/6082	H30			4212	AA6082
	AC-43400	AlSi10Mg(Fe)	3.2381	G-AlSi10Mg	A-S10G	LM9			4253	A13600
	AC-44200	AlSi12	3.2382	GD-AlSi12						
N3		AlSi17Cu5						ADC14		
N11	CC331G		2.0940.01	CuAl10Fe	CuAl10Fe	AB1			5710	C95200
	CC333G		2.0975.01	CuAl10Ni	CuAl10Ni5Fe5	AB2			5716	C95500
		CuNi10Fe1Mn	2.0872	CuNi10Fe1Mn	CuNi10Fe1Mn	CN102			5667	C70600
				CuNi10Zn45						
		CW408J	2.0790	CuNi18Zn19Pb	CuNi18Zn19Pb1					C76300
	CW352H		2.1176	CuPb10Sn	CuSn10Pb10	LB2			5640	C93700
	CC480K		2.1050.01	CuSn10	CuSn10	CT1			5443	C90700
			2.1087	CuSn10Zn					5458	C90500
	CW452K	CuSn6	2.1020	CuSn6	CuSn6	PB103		C5191	5428	C51900
	CW502L	CuZn15	2.0240	CuZn15	CuZn15	CZ102		C2300	5112	C23000
	CW706R	CuZn28Sn1	2.0470	CuZn28Sn1	CuZn29Sn1				5220	C44300
	CW508L	CuZn37	2.0321	CuZn37	CuZn37	CZ108			5150	C27200
	CW717R	CuZn38Sn1	2.0530	CuZn38Sn1						C46400
	CW614N	CuZn39Pb3	2.0401	CuZn39Pb3	CuZn39Pb3	CZ121			5170	C38500
	CW612N	CuZn40Pb2	2.0402	CuZn40Pb2	CuZn39Pb2	CZ120			5168	C37800
	CW622N	CuZn44Pb2	2.0410	CuZn44Pb2		CZ104			5272	C68700

SMG

U.N.E./ I.H.A.	AISI / ASTM	GOST	Misc. Brands	Condition	Structure
	A48 25 B	Sc 15			Grey cast iron (GCI)
	A48 30 B	Sc 20			Grey cast iron (GCI)
	G 3500				Grey cast iron (GCI)
	A48 35 B	Sc 25			Grey cast iron (GCI)
	A48 45 B	Sc 30			Grey cast iron (GCI)
	A48 50 B	Sc 35			Grey cast iron (GCI)
	Grade 350				Compacted graphite irons (CGI)
	Grade 400				Compacted graphite irons (CGI)
	Grade 400-15				Compacted graphite irons (CGI)
	Grade 450				Compacted graphite irons (CGI)
	Grade 500				Compacted graphite irons (CGI)
	A220 60004			Tempered	Malleable cast irons (MCI)
					Nodular cast irons (SGI)
FGE 38-17	60-40-18	Vc 42-12			Nodular cast irons (SGI)
	60-40-18	Vc 42-12			Nodular cast irons (SGI)
FGE 50-7	A536 80-55-6	Vc 50-2			Nodular cast irons (SGI)
FGE 60-2	A476 80-60-03	Vc 60-2			Nodular cast irons (SGI)
FGE 70-2	A536 100-70-03	Vc 70-2			Nodular cast irons (SGI)
	1600/1300/-				Austempered cast irons (ADI)
	1050/700/7				Austempered cast irons (ADI)
	1200/850/4				Austempered cast irons (ADI)
	1400/1100/1				Austempered cast irons (ADI)
	850/550/10				Austempered cast irons (ADI)
	A436 Type 2		Ni-Resist 2		Austenitic lamellar cast irons
	A436 Type 3		Ni-Resist 3		Austenitic lamellar cast irons
	A436 Type 1		Ni-Resist 1		Austenitic lamellar cast irons
	A439 Type D-5		Ni-Resist D-5		Austenitic nodular cast irons
	A436 Type D-2		Ni-Resist D-2		Austenitic nodular cast irons
	A436 Type D-3		Ni-Resist D-3		Austenitic nodular cast irons
	-		Nodumag		Austenitic nodular cast irons
	A439 Type D-2M		Ni-Resist D-2M		Austenitic nodular cast irons
	A380				
	B26				
	AMS 4442				
	AZ61A				
	AZ80A				
	B85				
	A413.2				
	B390.0				
	CA952	BrA9ZH3L			
	CA955	BrA10ZH4N4L			
	CA937				
		BrOF6.5-0.15			
		L90			
		LOMsh70-1-0.05			
		LO60-1			
		LAMsh77-2-0.05			

SMG

SMG	EN	EN-Nr	W.-Nr	DIN	AFNOR	BS	UNI	JIS	SS	UNS
S1										
S2										
S3	NiMo30		2.4810							N10002
	NiMo16Cr15W		2.4819							N10276
	NiCr19Fe19Nb5Mo3		2.4668							N07718
			2.4669							N07750
	NiCr20TiAl		2.4631							N07080
	NiCr19Co18Mo4Ti3Al3									N07500
	NiCr20Co13Mo4Ti3Al		2.4654							N07001
S11			3.7024							
										R54620
S12										R56320
	TiAl6V4		3.7164							R56400
S13				TiV10Fe2Al3						
H3	16 MnCr 5	1.7131	1.7131	16 MnCr 5	16 MC 5	527 M 17	16 MnCr 5	SCR 415	2511	G51170
H5	42 CrMo 4	1.7225	1.1201	42 CrMo 4	42 CD 4	708 M40	42 CrMo 4	SCM 440 (H)	2244	G41400
	C 67S	1.1231	1.1231	Ck 67	XC 68	060 A 67	C 70		1770	G10700
	C 75S	1.1248	1.1248	Ck 75	XC 75	060 A 78	C 75		1774, 1778	G10780
	C 100S	1.1274	1.1274	Ck 101		060 A 96		SUP 4	1870	G10950
	C 105U	1.1545	1.1545	C 105 W1	Y1 105		C 100 KU		1880	
			1.2550	60 WCrV 7	55 WC 20		55 WCrV 8 KU			
	55 Cr 3	1.7176	1.7176	55 Cr 3	55 C 3	527 A 60	55 Cr 3	SUP 9 (A)	2253	G51550
H7	107 CrV 3	1.2210	1.2210	115 CrV 3	100 C 3		107 CrV 3 KU			T61202
			1.2510	100 MnCrW 4	90 MWCV 5	BO 1	95 MnWCr 5 KU	SKS 3	2140	T31501
	90 MnCrV 8	1.2842	1.2842	90 MnCrV 8	90 MV 8	BO 2	90 MnVCr 8 KU			T31502
	100 Cr 6	1.3505	1.3505	100 Cr 6	100 C 6	534 A 99	100 Cr 6	SUJ 2	2258	G51986
H8	X 40 CrMoV 5 1	1.2344	1.2344	X 40 CrMoV 5 1	Z 40 CDV 5	BH 13	X 40 CrMo 5 1 1 KU	SKD 61	2242	T20813
	X 100 CrMoV 5	1.2363	1.2363	X 100 CrMoV 5 1	Z 100 CDV 5	BA 2	X 100 CrMoV 5 1 KU	SKD 12	2260	T30102
	X 155 CrVMo 12 1		1.2379	X 155 CrVMo 12 1	Z 160 CDV 12	BD 2	X 155 CrVMo 12 1 KU	SKD 11		T30402
			1.2436	X 210 CrW 12			X 215 CrW 12 1 KU	SKD 2	2312	
			1.2601	X 165 CrMoV 12			X 165 CrMoW 12 KU		2310	
			1.2713	55 NiCrMoV 6	55 NCDV 7			SKT 4		T61206
	HS 6-5-2-5	1.3243	1.3243	S 6-5-2-5	Z 85 WDKCV 06-05-05-04-02		HS 6-5-2-5	SKH 55	2723	
	HS 2-10-1-8	1.3247	1.3247	S 2-10-1-8	Z 110 DKCWV 09-08-04	BM 42	HS 2-9-1-8	SKH 51		T11342
	HS 6-5-2	1.3343	1.3343	S 6-5-2	Z 85 WDCV 06-05-04-0	BM 2	HS 6-5-2	SKH 9, SKH 51	2722	T11302
	HS 18-0-1	1.3355	1.3355	S 18-0-1	Z 80 WCV 18-04-01	BT 1	HS 18-0-1	SKH 2		T12001
H11	X 20 Cr 13	1.4021	1.4021	X 20 Cr 13	Z 20 C 13	420 S 37	X 20 Cr 13	SUS 420 J 1	2303	S42000
	X 70 CrMo 15	1.4109	1.4109	X 65 CrMo 14	Z 70 D 14			SUS 440 A		S44002
	X 90 CrMoV 18	1.4112	1.4112	X 90 CrMoV 18	Z 2 CND 18 05	409 S 19	X CrTi 12	SUS 440 B	2327	S44003
	X 105 CrMo 17	1.4125	1.4125	X 105 CrMo 17	Z 100 CD 17		X 105 CrMo 17	SUS 440 C		S44004
H12	X 3 CrNiMoAl 13 8 2	1.4534	1.4534	X 3 CrNiMoAl 13 8 2						S13800
	X 5 CrNiCuNb 16 4	1.4548	1.4542	X 5 CrNiCuNb 17 4	Z 6 CNU 17.4			SCS 24, SUS 630		S17400
	X 7 CrNiAl 17 7	1.4568	1.4568	X 7 CrNiAl 17 7	Z 9 CAN 17.7	301 S 81	X 7 CrNiAl 17 7	SUS 631	2388	S17700
	X 6 NiCrTiMoV 25 15	1.4980	1.4943	X 4 NiCrTi 25 15	Z 6 NCTDV 25.15	HR 51		SUH 660	2570	S66286
H21	X 120 Mn 12	1.3401	1.3401	X 120 Mn 12	Z 120 M 12	BW 10		SC MnH 1	2183	
H31	EN-GJN-HV520	0.9620	G-X330 NiCr 4 2	FB Ni4 Cr2 BC	Grade 2 A	Grade 2 A			05 12-00	F45001
	EN-GJN-HV550	0.9625	G-X260 NiCr 4 2	FB Ni4 Cr2 HC	Grade 2 B	Grade 2 B			05 13-00	F45000
	EN-GJN-HV600(XCr11)	0.9630	G-X300 CrNiSi 9 5 2	FB Cr9 Ni5	Grade 2 C, D, E	Grade 2 C, D, E			04 57-00	F45003

SMG

U.N.E./ I.H.A.	AISI / ASTM	GOST	Misc. Brands	Condition	Structure
			Discalloy	Precipitation hardened	
			Haynes 25		
			Stellite 21		
			Stellite 31		
			Hastelloy C		
		KHN65MV	Hastelloy C-276		
			IN 100		
			Inconel 718		
			Inconel X-750	Solution treated	
			Nimonic 80A		
			René 41		
			Udimet 500		
			Waspalloy		
			Ti	Commercially pure	Ti (α)
	AMS 4919		Ti 6-2-4-2	Annealed	Ti (α)
	AMS 4943		Ti 3Al-2.5V (grd 9)	Annealed	Ti (α+β)
	AMS 4920, Grd 5	VT6	Ti 6Al-4V	Annealed	Ti (α+β)
	AMS 4986		Ti 10V-2Fe-3Al	Annealed	Ti (β)
F.1516	5115	12KHN2		Case hardened	
F.1252	4142, 4140	38HM		Quenched & Tempered	
F.5103	1070	70		Quenched & Tempered	
F.5107	1078, 1080	75		Quenched & Tempered	
F.5117	1095			Quenched & Tempered	
F.5118	W 1	U10A		Quenched & Tempered	
	S1	5KHV2SF		Quenched & Tempered	
	5155			Quenched & Tempered	
F.520L	L2	11KHF		Quenched & Tempered	
F.5220	O1	9KHVG		Quenched & Tempered	
	O2	9G2F		Quenched & Tempered	
F.5230	52100	SHKH15		Quenched & Tempered	
F.5318	H13	4KH5MF1S		Quenched & Tempered	
F.5227	A2	9KH5VF		Quenched & Tempered	
F.5211	D2	KH12MF		Quenched & Tempered	
F.5213		KH12		Quenched & Tempered	
		KH12MF		Quenched & Tempered	
F.520.S	L6	5KHNM		Quenched & Tempered	
F.5613	M35	R6M5K5		Quenched & Tempered	
	M42	R2AM9K5		Quenched & Tempered	
F.5603	M2	R6M5		Quenched & Tempered	
	T1	R18		Quenched & Tempered	
F.5261	420	20KH13		Quenched & Tempered	Martensite
	440 A			Quenched & Tempered	Martensite
	440 B	95KH18		Quenched & Tempered	Martensite
	440 C	95KH18		Quenched & Tempered	Martensite
	XM-13		PH13-8Mo	Precipitation hardened	Martensite
	630		17-4-PH	Precipitation hardened	Martensite
	AMS 5528	09KH17N7YU1	17-7-PH	Precipitation hardened	Austenite/ferrite
	660		A286	Precipitation hardened	Austenite
	A128 Grade A				
	A532 IB (NiCr-LC		Ni-Hard 2		White cast iron
	A532 IA (NiCr-HC)		Ni-Hard 1		White cast iron
	A532 ID (Ni-HiCr)		Ni-Hard 4		White cast iron